MECO-HENEGHAN
ENGINEERS, LLC

SPECIFICATIONS FOR
PHASE Ib – Contract F

Illinois Alluvial Regional Water Company, Inc. (IARWC)

Jersey County, Illinois

With Representation from the following Entities:

City of Carlinville

Central Macoupin County Rural Water District

Village of Dorchester

City of Bunker Hill

Fosterburg Water District

Village of Fieldon

Jersey County Rural Water Company

SETH W. ELLIOTT
62788
REGISTERED
PROFESSIONAL
ENGINEER
OF
ILLINOIS

I hereby certify that this report was prepared by me or under my direct supervision, and that I am duly registered professional engineer under the laws of the State of Illinois.

Seth W Elliott

Seth W. Elliott
Illinois Professional Engineer
No. 62788
Expires: November 30, 2027

MECO-Heneghan Engineers, LLC
1004 State Highway 16
Jerseyville, IL 62052
Professional Design Firm Registration No. 184.007845
Expires April 30, 2027

Intentionally Blank

Table of Contents

Advertisement For Bids	EJCDC No. C-111 (2018 Edition)
Instructions to Bidders	EJCDC No. C-200 (2018 Edition)
Bid Form	EJCDC No. C-410 (2018 Edition)
Bid Bond	EJCDC No. C-430 (2018 Edition)
Statement of Contractor's Qualifications	EJCDC No. C-451 (2018 Edition)
Non-Collusion Affidavit of Prime Bidder	NCA-1
Notice of Intent to Award	PWSLP 25
Notice of Award	EJCDC No. C-510 (2018 Edition)
IEPA Certification of Nonsegregated Facilities	PWSLP 29
Notice to Labor Unions or Other Organizations of Workers Nondiscrimination in Employment	PWSLP 30
Certification Regarding Debarment, Suspension and Other Responsibility Matters	PWSLP 31
Construction Contracts of Loan Recipient and Other Sections from "Procedures for Issuing Loans from the Public Water Supply Loan Program"	PWSLP 32 - 34
Bidder Certification Incompliance with Article 33E-11 to the "Criminal Code of 2012"	PWSLP 35
Specifications for Disadvantaged Business Enterprise Participation	PWSLP 36 - 42
Bidder Certification Regarding the Use of Iron, Steel, Manufactured Products, and Construction Materials produced in the United States (Build America, Buy America Act)	PWSLP 43 – 46
Illinois Works Jobs Program Act – Apprenticeship Initiative	PWSLP 47 - 57
Agreement Between Owner and Contractor(s)	EJCDC No. C-520 (2018 Edition)
Performance Bond	EJCDC No. C-610 (2018 Edition)
Payment Bond	EJCDC No. C-615 (2018 Edition)
Notice to Proceed	EJCDC No. C-550 (2018 Edition)
General Conditions	EJCDC No. C-710 (2018 Edition)
Prevailing Rate of Hourly Wages (when required)	Supplied by Illinois Department of Labor
Application for Payment	EJCDC No. C-620 (2018 Edition)
Certified Payroll	CP-1 to CP-2
Partial Lien Waiver	PL-1
Final Lien Waiver	FL-1
Certificate of Substantial Completion	EJCDC No. C-625 (2018 Edition)
Work Change Directive	EJCDC No. C-940 (2018 Edition)
Change Order	EJCDC No. C-941 (2018 Edition)
Field Order	EJCDC No. C-942 (2018 Edition)
Illinois Department of Agriculture – Construction Standards	SP-1 to SP-12

Technical Specifications

DIVISION 1 – GENERAL REQUIREMENTS

011100 SUMMARY OF WORK 011100/1-12
012200 UNIT PRICES 012200/1-6
014126 PERMIT REQUIREMENTS 014126/1-3
014500 QUALITY CONTROL 014500/1-2
015526 TRAFFIC CONTROL 015526/1-2
017123 FIELD ENGINEERING AND SURVEYING 017123/1-3

DIVISION 3 – CONCRETE

033000 PORTLAND CEMENT CONCRETE 033000/1-9

DIVISION 5 – METALS

050800 MISCELLANEOUS METALS 050800/1-3
051200 STRUCTURAL STEEL 051200/1-4

DIVISION 7 – THERMAL AND MOISTURE PROTECTION

079000 JOINT FLLERS AND SEALANTS 079000/1-4

DIVISION 9 – FINISHES

099000 PAINTS AND COATINGS 099000/1-9

DIVISION 27 – CONNECTORS

271323 OPTICAL FIBER CONNECTOR 271323/1-2
271324 OPTICAL FIBER HANDHOLD 271324/1-2

DIVISION 31 – EARTHWORK

311000 SITE CLEARING 311000/1-2
311200 OBSTRUCTION REMOVAL AND REPLACEMENT 311200/1-2
311313 TREE REMOVAL 311313/1-2
312213 LINEAR GRADING 312213/1-2
312300 EXCAVATING, FILLING AND GRADING 312300/1-14
312313 SUBGRADE PREPARATION 312313/1-2
312323.13 SUBGRADE COMPACTION 312323.13/1
312500 SEDIMENTATION AND EROSION CONTROL 312500/1-2
313400 EMBANKMENT PROTECTION 313400/1-2
317100 TRENCHLESS DIRECTIONAL BORING 317100/1

DIVISION 32 – EXTERIOR IMPROVEMENTS

321123 AGGREGATE BASE COURSE 321123/1-3
321200 PAVEMENT RESTORATION 321200/1-2
323126 WOVEN WIRE FENCING 323126/1-2
323127 BARBED WIRE FENCING 323127/1-2
329000 FERTILIZING, SEEDING, AND MULCHING 329000/1-7

DIVISION 33 – UTILITIES

330500 UTILITY MATERIALS 330500/1-19
330523.13 HIGHWAY CROSSINGS 330523.13/1-2
331100 WATER DISTRIBUTION 331100/1-7
338223 OPTICAL FIBER CABLING 338223/1-4

DIVISION 40 – PROCESS INTEGRATION

404616 POLYETHYLENE ENCASEMENT TUBING 404616/1

Roadway Crossing Permits

Intentionally Blank

ADVERTISEMENT FOR BIDS

Illinois Alluvial Regional Water Company, Inc.
Jerseyville, IL
Phase 1b – Contracts A-2, C-2, D, F, and G

General Notice

Illinois Alluvial Regional Water Company, Inc. (Owner) is requesting Sealed Bids for the construction of the following Project: **Phase 1b - Contracts A-2, C-2, D, F, and G.** Bids for the construction of the Project will be received at the **Illinois Alluvial Regional Water Company, Inc.** located at **1004 State Highway 16, Jerseyville, IL 62052**, until **October 9, 2026** at **2:00pm** local time. At that time the Bids received will be **publicly** opened and read.

The Project includes the following Work:

Separate Bids will be received for the following Contracts: **Contract A-2 – Water Supply Wells, Contract C-2 – Water Treatment Plant, Contract D - Elevated Water Storage Tank, Contract F - Finished Water Transmission Main, and Contract G - Finished Water Transmission Main.**

Obtaining the Bidding Documents

Information and Bidding Documents for the Project can be found at the following designated website: https://haengr.com/bid-documents/ Bidding Documents may be downloaded from the designated website. Prospective Bidders are urged to register with the designated website as a plan holder, even if Bidding Documents are obtained from a plan room or source other than the designated website in either electronic or paper format. The designated website will be updated periodically with addenda, lists of registered plan holders, reports, and other information relevant to submitting a Bid for the Project. All official notifications, addenda, and other Bidding Documents will be offered only through the designated website. Neither Owner nor Engineer will be responsible for Bidding Documents, including addenda, if any, obtained from sources other than the designated website.

The Issuing Office for the Bidding Documents is: MECO-Heneghan Engineers, LLC. 1004 State Highway 16, Jerseyville, IL 62052, contact Seth Elliott – 618-498-6418 – swelliott@heneghanassoc.com. Prospective Bidders may obtain or examine the Bidding Documents at the Issuing Office on Monday through Friday between the hours of 8:00am and 4:30pm and may obtain copies of the Bidding Documents from the Issuing Office as described below. Partial sets of Bidding Documents will not be available from the Issuing Office. Neither Owner nor Engineer will be responsible for full or partial sets of Bidding Documents, including addenda, if any, obtained from sources other than the Issuing Office.

Bidding Documents may be purchased from the Issuing Office during the hours indicated above. Cost does not include shipping charges. Upon Issuing Office's receipt of payment, printed Bidding Documents will be sent via UPS delivery service. The shipping charge amount will be $10.00. Bidding Documents are available for purchase in the following formats:

Format	Cost
Bidding Documents (including Full-Size Drawings)	$100.00
Bidding Documents (including Half-Size Drawings)	$80.00
Electronic download of Bidding Documents from **https://haengr.com/bid-documents/**	Free
Addition to the Bidders List	$10.00

Pre-bid Conference

Copyright© 2018 National Society of Professional Engineers, American Council of Engineering Companies, and American Society of Civil Engineers. All rights reserved.

A mandatory pre-bid conference for the Project will be held on **September 16, 2026** at **10:00am** at **1004 State Highway 16, Jerseyville, IL 62052.** Bids will not be accepted from Bidders that do not attend the mandatory pre-bid conference.

Instructions to Bidders.

For all further requirements regarding bid submittal, qualifications, procedures, and contract award, refer to the Instructions to Bidders that are included in the Bidding Documents.

Domestic Preference

"Any contract or contracts awarded under this invitation for bids are expected to be funded in part by a loan from the Illinois Environmental Protection Agency (Illinois EPA). Neither the State of Illinois nor any of its departments, agencies, or employees is or will be a party to this invitation for bids or any resulting contract. The procurement will be subject to regulations contained in the Procedures for Issuing Loans from the Public Water Supply Loan Program (35 IAC Part 662), the Davis-Bacon Act (40 USC 276a through 276a-5) as defined by the United States Department of Labor, the Employment of Illinois Workers on Public Works Act (30 ILCS 570), Illinois Works Jobs Program Act (30 ILCS 559/20-1), and the "Build America, Buy America Act" requirements as contained in the federal Infrastructure Investment and Jobs Act, Pub. L. No. 117-58.

This procurement is also subject to the loan recipient's policy regarding the increased use of disadvantaged business enterprises. The loan recipient's policy requires all bidders to undertake specified affirmative efforts at least sixteen (16) days prior to bid opening. The policy is contained in the specifications."

This Advertisement is issued by:

Owner: **Illinois Alluvial Regional Water Company, Inc.**
By: **Allen Davenport**
Title: **Board President**
Date: **09/08/2026**

Copyright© 2018 National Society of Professional Engineers, American Council of Engineering Companies, and American Society of Civil Engineers. All rights reserved.

INSTRUCTIONS TO BIDDERS FOR CONSTRUCTION CONTRACT

TABLE OF CONTENTS

Page

Article 1— Defined Terms 1

Article 2— Bidding Documents 1

Article 3— Qualifications of Bidders 2

Article 4— Pre-Bid Conference 2

Article 5— Site and Other Areas; Existing Site Conditions; Examination of Site; Owner's Safety Program; Other Work at the Site 3

Article 6— Bidder's Representations and Certifications 5

Article 7— Interpretations and Addenda 5

Article 8— Bid Security 6

Article 9— Contract Times 6

Article 10— Substitute and "Or Equal" Items 6

Article 11— Subcontractors, Suppliers, and Others 7

Article 12— Preparation of Bid 7

Article 13— Basis of Bid 8

Article 14— Submittal of Bid 9

Article 15— Modification and Withdrawal of Bid 10

Article 16— Opening of Bids 10

Article 17— Bids to Remain Subject to Acceptance 10

Article 18— Evaluation of Bids and Award of Contract 10

Article 19— Bonds and Insurance 11

Article 20— Signing of Agreement 11

Article 21— Sales and Use Taxes 11

Article 22— Contracts to Be Assigned 12

Article 23— Bidder Certification 12

Copyright© 2018 National Society of Professional Engineers, American Council of Engineering Companies, and American Society of Civil Engineers. All rights reserved.

ARTICLE 1—DEFINED TERMS

1.01 Terms used in these Instructions to Bidders have the meanings indicated in the General Conditions and General Conditions. Additional terms used in these Instructions to Bidders have the meanings indicated below:

A. *Issuing Office*—The office from which the Bidding Documents are to be issued, and which registers plan holders.

ARTICLE 2—BIDDING DOCUMENTS

2.01 Bidder shall obtain a complete set of Bidding Requirements and proposed Contract Documents (together, the Bidding Documents). See the Agreement for a list of the Contract Documents. It is Bidder's responsibility to determine that it is using a complete set of documents in the preparation of a Bid. Bidder assumes sole responsibility for errors or misinterpretations resulting from the use of incomplete documents, by Bidder itself or by its prospective Subcontractors and Suppliers.

2.02 Bidding Documents are made available for the sole purpose of obtaining Bids for completion of the Project and permission to download or distribution of the Bidding Documents does not confer a license or grant permission or authorization for any other use. Authorization to download documents, or other distribution, includes the right for plan holders to print documents solely for their use, and the use of their prospective Subcontractors and Suppliers, provided the plan holder pays all costs associated with printing or reproduction. Printed documents may not be re-sold under any circumstances.

2.03 Owner has established a Bidding Documents Website as indicated in the Advertisement or invitation to bid. Owner recommends that Bidder register as a plan holder with the Issuing Office at such website, and obtain a complete set of the Bidding Documents from such website. Bidders may rely that sets of Bidding Documents obtained from the Bidding Documents Website are complete, unless an omission is blatant. Registered plan holders will receive Addenda issued by Owner.

2.04 Bidder may register as a plan holder and obtain complete sets of Bidding Documents, in the number and format stated in the Advertisement or invitation to bid, from the Issuing Office. Bidders may rely that sets of Bidding Documents obtained from the Issuing Office are complete, unless an omission is blatant. Registered plan holders will receive Addenda issued by Owner.

2.05 Plan rooms (including construction information subscription services, and electronic and virtual plan rooms) may distribute the Bidding Documents, or make them available for examination. Those prospective bidders that obtain an electronic (digital) copy of the Bidding Documents from a plan room are encouraged to register as plan holders from the Bidding Documents Website or Issuing Office. Owner is not responsible for omissions in Bidding Documents or other documents obtained from plan rooms, or for a Bidder's failure to obtain Addenda from a plan room.

2.06 *Electronic Documents*

A. When the Bidding Requirements indicate that electronic (digital) copies of the Bidding Documents are available, such documents will be made available to the Bidders as Electronic Documents in the manner specified.

1. Bidding Documents will be provided in Adobe PDF (Portable Document Format) (.pdf) that is readable by Adobe Acrobat Reader Version **9.0** or later. It is the intent of the

Copyright© 2018 National Society of Professional Engineers, American Council of Engineering Companies, and American Society of Civil Engineers. All rights reserved.

Engineer and Owner that such Electronic Documents are to be exactly representative of the paper copies of the documents. However, because the Owner and Engineer cannot totally control the transmission and receipt of Electronic Documents nor the Contractor's means of reproduction of such documents, the Owner and Engineer cannot and do not guarantee that Electronic Documents and reproductions prepared from those versions are identical in every manner to the paper copies.

B. Unless otherwise stated in the Bidding Documents, the Bidder may use and rely upon complete sets of Electronic Documents of the Bidding Documents, described in Paragraph 2.06.A above. However, Bidder assumes all risks associated with differences arising from transmission/receipt of Electronic Documents versions of Bidding Documents and reproductions prepared from those versions and, further, assumes all risks, costs, and responsibility associated with use of the Electronic Documents versions to derive information that is not explicitly contained in printed paper versions of the documents, and for Bidder's reliance upon such derived information.

ARTICLE 3—QUALIFICATIONS OF BIDDERS

Deleted.

E.

Deleted.

3.03 Bidder is to submit the following information with its Bid to demonstrate Bidder's qualifications to perform the Work:

A. Written evidence establishing its qualifications such as financial data, previous experience, and present commitments.

B. A written statement that Bidder is authorized to do business in the state where the Project is located, or a written certification that Bidder will obtain such authority prior to the Effective Date of the Contract.

C. Bidder's state or other contractor license number, if applicable.

D. Subcontractor and Supplier qualification information.

E. Other required information regarding qualifications.

3.04 A Bidder's failure to submit required qualification information within the times indicated may disqualify Bidder from receiving an award of the Contract.

3.05 No requirement in this Article 3 to submit information will prejudice the right of Owner to seek additional pertinent information regarding Bidder's qualifications.

ARTICLE 4—PRE-BID CONFERENCE

4.01 A non-mandatory pre-bid conference will be held at the time and location indicated in the Advertisement or invitation to bid. Representatives of Owner and Engineer will be present to

Copyright© 2018 National Society of Professional Engineers, American Council of Engineering Companies, and American Society of Civil Engineers. All rights reserved.

discuss the Project. Bidders are encouraged to attend and participate in the conference; however, attendance at this conference is not required to submit a Bid.

4.02 Information presented at the pre-Bid conference does not alter the Contract Documents. Owner will issue Addenda to make any changes to the Contract Documents that result from discussions at the pre-Bid conference. Information presented, and statements made at the pre-bid conference will not be binding or legally effective unless incorporated in an Addendum.

ARTICLE 5—SITE AND OTHER AREAS; EXISTING SITE CONDITIONS; EXAMINATION OF SITE; OWNER'S SAFETY PROGRAM; OTHER WORK AT THE SITE

5.01 *Site and Other Areas*

A. The Site is identified in the Bidding Documents. By definition, the Site includes rights-of-way, easements, and other lands furnished by Owner for the use of the Contractor. Any additional lands required for temporary construction facilities, construction equipment, or storage of materials and equipment, and any access needed for such additional lands, are to be obtained and paid for by Contractor.

5.02 *Existing Site Conditions*

A. *Subsurface and Physical Conditions; Hazardous Environmental Conditions*

1. The General Conditions identify the following regarding existing conditions at or adjacent to the Site:

   a. Those reports of explorations and tests of subsurface conditions at or adjacent to the Site that contain Technical Data.

   b. Those drawings known to Owner of existing physical conditions at or adjacent to the Site, including those drawings depicting existing surface or subsurface structures at or adjacent to the Site (except Underground Facilities), that contain Technical Data.

   c. Reports and drawings known to Owner relating to Hazardous Environmental Conditions that have been identified at or adjacent to the Site.

   d. Technical Data contained in such reports and drawings.

2. Owner will make copies of reports and drawings referenced above available to any Bidder on request. These reports and drawings are not part of the Contract Documents, but the Technical Data contained therein upon whose accuracy Bidder is entitled to rely, as provided in the General Conditions, has been identified and established in the General Conditions. Bidder is responsible for any interpretation or conclusion Bidder draws from any Technical Data or any other data, interpretations, opinions, or information contained in such reports or shown or indicated in such drawings.

3. If the General Conditions do not identify Technical Data, the default definition of Technical Data set forth in Article 1 of the General Conditions will apply.

4. *Geotechnical Baseline Report/Geotechnical Data Report:* The Bidding Documents contain a Geotechnical Baseline Report (GBR) and Geotechnical Data Report (GDR).

   a. As set forth in the General Conditions, the GBR describes certain select subsurface conditions that are anticipated to be encountered by Contractor during

Copyright© 2018 National Society of Professional Engineers, American Council of Engineering Companies, and American Society of Civil Engineers. All rights reserved.

construction in specified locations ("Baseline Conditions"). The GBR is a Contract Document.

b. The Baseline Conditions in the GBR are intended to reduce uncertainty and the degree of contingency in submitted Bids. However, Bidders cannot rely solely on the Baseline Conditions. Bids should be based on a comprehensive approach that includes an independent review and analysis of the GBR, all other Contract Documents, Technical Data, other available information, and observable surface conditions. Not all potential subsurface conditions are baselined.

c. Nothing in the GBR is intended to relieve Bidders of the responsibility to make their own determinations regarding construction costs, bidding strategies, and Bid prices, nor of the responsibility to select and be responsible for the means, methods, techniques, sequences, and procedures of construction, and for safety precautions and programs incident thereto.

d. As set forth in the General Conditions, the GDR is a Contract Document containing data prepared by or for the Owner in support of the GBR.

B. *Underground Facilities:* Underground Facilities are shown or indicated on the Drawings, pursuant to Paragraph 5.05 of the General Conditions, and not in the drawings referred to in Paragraph 5.02.A of these Instructions to Bidders. Information and data regarding the presence or location of Underground Facilities are not intended to be categorized, identified, or defined as Technical Data.

5.03 *Other Site-related Documents*

A. No other Site-related documents are available.

5.04 *Site Visit and Testing by Bidders*

A. Bidder is required to visit the Site and conduct a thorough visual examination of the Site and adjacent areas. During the visit the Bidder must not disturb any ongoing operations at the Site.

B. A Site visit is scheduled following the pre-bid conference. Maps to the Site will be available at the pre-Bid conference.

D. Deleted.Bidders visiting the Site are required to arrange their own transportation to the Site.

E. All access to the Site other than during a regularly scheduled Site visit must be coordinated through the Engineer. Bidder must conduct the required Site visit during normal working hours.

F. Bidder is not required to conduct any subsurface testing, or exhaustive investigations of Site conditions.

G. On request, and to the extent Owner has control over the Site, and schedule permitting, the Owner will provide Bidder general access to the Site to conduct such additional examinations, investigations, explorations, tests, and studies as Bidder deems necessary for preparing and submitting a successful Bid. Owner will not have any obligation to grant such access if doing so is not practical because of existing operations, security or safety concerns, or restraints on Owner's authority regarding the Site. Bidder is responsible for establishing access needed to reach specific selected test sites.

Copyright© 2018 National Society of Professional Engineers, American Council of Engineering Companies, and American Society of Civil Engineers. All rights reserved.

H. Bidder must comply with all applicable Laws and Regulations regarding excavation and location of utilities, obtain all permits, and comply with all terms and conditions established by Owner or by property owners or other entities controlling the Site with respect to schedule, access, existing operations, security, liability insurance, and applicable safety programs.

I. Bidder must fill all holes and clean up and restore the Site to its former condition upon completion of such explorations, investigations, tests, and studies.

5.05 *Owner's Safety Program*

A. Site visits and work at the Site may be governed by an Owner safety program. If an Owner safety program exists, it will be noted in the General Conditions.

5.06 *Other Work at the Site*

A. Reference is made to Article 8 of the General Conditions for the identification of the general nature of other work of which Owner is aware (if any) that is to be performed at the Site by Owner or others (such as utilities and other prime contractors) and relates to the Work contemplated by these Bidding Documents. If Owner is party to a written contract for such other work, then on request, Owner will provide to each Bidder access to examine such contracts (other than portions thereof related to price and other confidential matters), if any.

ARTICLE 6—BIDDER'S REPRESENTATIONS AND CERTIFICATIONS

6.01 *Express Representations and Certifications in Bid Form, Agreement*

A. The Bid Form that each Bidder will submit contains express representations regarding the Bidder's examination of Project documentation, Site visit, and preparation of the Bid, and certifications regarding lack of collusion or fraud in connection with the Bid. Bidder should review these representations and certifications, and assure that Bidder can make the representations and certifications in good faith, before executing and submitting its Bid.

B. If Bidder is awarded the Contract, Bidder (as Contractor) will make similar express representations and certifications when it executes the Agreement.

ARTICLE 7—INTERPRETATIONS AND ADDENDA

7.01 Owner on its own initiative may issue Addenda to clarify, correct, supplement, or change the Bidding Documents.

7.02 Bidder shall submit all questions about the meaning or intent of the Bidding Documents to Engineer in writing. Contact information and submittal procedures for such questions are as follows:

A. **Contact: Seth W. Elliott, swelliott@heneghanassoc.com**

7.03 Interpretations or clarifications considered necessary by Engineer in response to such questions will be issued by Addenda delivered to all registered plan holders. Questions received less than seven days prior to the date for opening of Bids may not be answered.

7.04 Only responses set forth in an Addendum will be binding. Oral and other interpretations or clarifications will be without legal effect. Responses to questions are not part of the Contract

Copyright© 2018 National Society of Professional Engineers, American Council of Engineering Companies, and American Society of Civil Engineers. All rights reserved.

Documents unless set forth in an Addendum that expressly modifies or supplements the Contract Documents.

ARTICLE 8—BID SECURITY

8.01 A Bid must be accompanied by Bid security made payable to Owner in an amount of **five** percent of Bidder's maximum Bid price (determined by adding the base bid and all alternates) and in the form of a Bid bond issued by a surety meeting the requirements of Paragraph 6.01 of the General Conditions. Such Bid bond will be issued in the form included in the Bidding Documents.

8.02 The Bid security of the apparent Successful Bidder will be retained until Owner awards the contract to such Bidder, and such Bidder has executed the Contract, furnished the required Contract security, and met the other conditions of the Notice of Award, whereupon the Bid security will be released. If the Successful Bidder fails to execute and deliver the Contract and furnish the required Contract security within 15 days after the Notice of Award, Owner may consider Bidder to be in default, annul the Notice of Award, and the Bid security of that Bidder will be forfeited, in whole in the case of a penal sum bid bond, and to the extent of Owner's damages in the case of a damages-form bond. Such forfeiture will be Owner's exclusive remedy if Bidder defaults.

8.03 The Bid security of other Bidders that Owner believes to have a reasonable chance of receiving the award may be retained by Owner until the earlier of 7 days after the Effective Date of the Contract or 61 days after the Bid opening, whereupon Bid security furnished by such Bidders will be released.

8.04 Bid security of other Bidders that Owner believes do not have a reasonable chance of receiving the award will be released within 7 days after the Bid opening.

ARTICLE 9—CONTRACT TIMES

9.01 The number of days within which, or the dates by which, the Work is to be (a) substantially completed and (b) ready for final payment, and (c) Milestones (if any) are to be achieved, are set forth in the Agreement.

9.02 **Deleted.**

9.03 Provisions for liquidated damages, if any, for failure to timely attain a Milestone, Substantial Completion, or completion of the Work in readiness for final payment, are set forth in the Agreement.

ARTICLE 10—SUBSTITUTE AND "OR EQUAL" ITEMS

10.01 **Deleted.**

10.02 The Contract for the Work, as awarded, will be on the basis of materials and equipment specified or described in the Bidding Documents, and those "or-equal" or substitute or materials and equipment subsequently approved by Engineer prior to the submittal of Bids and identified by Addendum. No item of material or equipment will be considered by Engineer as an "or-equal" or substitute unless written request for approval has been submitted by Bidder and has been received by Engineer within 10 days of the issuance of the Advertisement for Bids or invitation to Bidders. Each such request must comply with the requirements of Paragraphs 7.05 and 7.06 of the General Conditions, and the review of the request will be governed by the principles in those

Copyright© 2018 National Society of Professional Engineers, American Council of Engineering Companies, and American Society of Civil Engineers. All rights reserved.

paragraphs. The burden of proof of the merit of the proposed item is upon Bidder. Engineer's decision of approval or disapproval of a proposed item will be final. If Engineer approves any such proposed item, such approval will be set forth in an Addendum issued to all registered Bidders. Bidders cannot rely upon approvals made in any other manner.

10.03 All prices that Bidder sets forth in its Bid will be based on the presumption that the Contractor will furnish the materials and equipment specified or described in the Bidding Documents, as supplemented by Addenda. Any assumptions regarding the possibility of post-Bid approvals of "or-equal" or substitution requests are made at Bidder's sole risk.

ARTICLE 11—SUBCONTRACTORS, SUPPLIERS, AND OTHERS

11.01 A Bidder must be prepared to retain specific Subcontractors and Suppliers for the performance of the Work if required to do so by the Bidding Documents or in the Specifications. If a prospective Bidder objects to retaining any such Subcontractor or Supplier and the concern is not relieved by an Addendum, then the prospective Bidder should refrain from submitting a Bid.

11.02 The apparent Successful Bidder, and any other Bidder so requested, must submit to Owner a list of the Subcontractors or Suppliers proposed for the following portions of the Work within five days after Bid opening:

A. **N/A**

11.03 If requested by Owner, such list must be accompanied by an experience statement with pertinent information regarding similar projects and other evidence of qualification for each such Subcontractor or Supplier. If Owner or Engineer, after due investigation, has reasonable objection to any proposed Subcontractor or Supplier, Owner may, before the Notice of Award is given, request apparent Successful Bidder to submit an acceptable substitute, in which case apparent Successful Bidder will submit a substitute, Bidder's Bid price will be increased (or decreased) by the difference in cost occasioned by such substitution, and Owner may consider such price adjustment in evaluating Bids and making the Contract award.

11.04 If apparent Successful Bidder declines to make any such substitution, Owner may award the Contract to the next lowest Bidder that proposes to use acceptable Subcontractors and Suppliers. Declining to make requested substitutions will constitute grounds for forfeiture of the Bid security of any Bidder. Any Subcontractor or Supplier, so listed and against which Owner or Engineer makes no written objection prior to the giving of the Notice of Award will be deemed acceptable to Owner and Engineer subject to subsequent revocation of such acceptance as provided in Paragraph 7.07 of the General Conditions.

ARTICLE 12—PREPARATION OF BID

12.01 The Bid Form is included with the Bidding Documents.

A. All blanks on the Bid Form must be completed in ink and the Bid Form signed in ink. Erasures or alterations must be initialed in ink by the person signing the Bid Form. A Bid price must be indicated for each section, Bid item, alternate, adjustment unit price item, and unit price item listed therein.

B. If the Bid Form expressly indicates that submitting pricing on a specific alternate item is optional, and Bidder elects to not furnish pricing for such optional alternate item, then Bidder may enter the words "No Bid" or "Not Applicable."

Copyright© 2018 National Society of Professional Engineers, American Council of Engineering Companies, and American Society of Civil Engineers. All rights reserved.

12.02 If Bidder has obtained the Bidding Documents as Electronic Documents, then Bidder shall prepare its Bid on a paper copy of the Bid Form printed from the Electronic Documents version of the Bidding Documents. The printed copy of the Bid Form must be clearly legible, printed on 8½ inch by 11-inch paper and as closely identical in appearance to the Electronic Document version of the Bid Form as may be practical. The Owner reserves the right to accept Bid Forms which nominally vary in appearance from the original paper version of the Bid Form, providing that all required information and submittals are included with the Bid.

12.03 A Bid by a corporation must be executed in the corporate name by a corporate officer (whose title must appear under the signature), accompanied by evidence of authority to sign. The corporate address and state of incorporation must be shown.

12.04 A Bid by a partnership must be executed in the partnership name and signed by a partner (whose title must appear under the signature), accompanied by evidence of authority to sign. The official address of the partnership must be shown.

12.05 A Bid by a limited liability company must be executed in the name of the firm by a member or other authorized person and accompanied by evidence of authority to sign. The state of formation of the firm and the official address of the firm must be shown.

12.06 A Bid by an individual must show the Bidder's name and official address.

12.07 A Bid by a joint venture must be executed by an authorized representative of each joint venturer in the manner indicated on the Bid Form. The joint venture must have been formally established prior to submittal of a Bid, and the official address of the joint venture must be shown.

12.08 All names must be printed in ink below the signatures.

12.09 The Bid must contain an acknowledgment of receipt of all Addenda, the numbers of which must be filled in on the Bid Form.

12.10 Postal and e-mail addresses and telephone number for communications regarding the Bid must be shown.

12.11 The Bid must contain evidence of Bidder's authority to do business in the state where the Project is located, or Bidder must certify in writing that it will obtain such authority within the time for acceptance of Bids and attach such certification to the Bid.

12.12 If Bidder is required to be licensed to submit a Bid or perform the Work in the state where the Project is located, the Bid must contain evidence of Bidder's licensure, or Bidder must certify in writing that it will obtain such licensure within the time for acceptance of Bids and attach such certification to the Bid. Bidder's state contractor license number, if any, must also be shown on the Bid Form.

ARTICLE 13—BASIS OF BID

A. (Not Applicable)

Copyright© 2018 National Society of Professional Engineers, American Council of Engineering Companies, and American Society of Civil Engineers. All rights reserved.

13.02 *(Not Applicable)*

13.03 *(Not Applicable)*

13.04 *(Not Applicable)*

13.05 *Unit Price*

A. Bidders must submit a Bid on a unit price basis for each item of Work listed in the unit price section of the Bid Form.

B. The "Bid Price" (sometimes referred to as the extended price) for each unit price Bid item will be the product of the "Estimated Quantity", which Owner or its representative has set forth in the Bid Form, for the item and the corresponding "Bid Unit Price" offered by the Bidder. The total of all unit price Bid items will be the sum of these "Bid Prices"; such total will be used by Owner for Bid comparison purposes. The final quantities and Contract Price will be determined in accordance with Paragraph 13.03 of the General Conditions.

C. Discrepancies between the multiplication of units of Work and unit prices will be resolved in favor of the unit prices. Discrepancies between the indicated sum of any column of figures and the correct sum thereof will be resolved in favor of the correct sum.

D. Bidders must submit a Bid for each alternate described in the bidding documents and as provided in the Bid Form. The price for each alternate will be the amount added to, deleted from, or replacement of from the unit price bid work as described on the bid form.

E. In the comparison of Bids, alternates will be decided based on the OWNER's discretion.

13.06 *Allowances*

A. For cash allowances the Bid price must include such amounts as the Bidder deems proper for Contractor's overhead, costs, profit, and other expenses on account of cash allowances, if any, named in the Contract Documents, in accordance with Paragraph 13.02.B of the General Conditions.

13.07 *(Not Applicable)*

ARTICLE 14—SUBMITTAL OF BID

14.01 The Bidding Documents are included in these specifications.

14.02 A Bid must be received no later than the date and time prescribed and at the place indicated in the Advertisement or invitation to bid and must be enclosed in a plainly marked package with the Project title, and, if applicable, the designated portion of the Project for which the Bid is submitted, the name and address of Bidder, and must be accompanied by the Bid security and other required documents. If a Bid is sent by mail or other delivery system, the sealed envelope containing the Bid must be enclosed in a separate package plainly marked on the outside with the notation "BID ENCLOSED." A mailed Bid must be addressed to the location designated in the Advertisement.

14.03 Bids received after the date and time prescribed for the opening of bids, or not submitted at the correct location or in the designated manner, will not be accepted and will be returned to the Bidder unopened.

Copyright© 2018 National Society of Professional Engineers, American Council of Engineering Companies, and American Society of Civil Engineers. All rights reserved.

ARTICLE 15—MODIFICATION AND WITHDRAWAL OF BID

15.01 An unopened Bid may be withdrawn by an appropriate document duly executed in the same manner that a Bid must be executed and delivered to the place where Bids are to be submitted prior to the date and time for the opening of Bids. Upon receipt of such notice, the unopened Bid will be returned to the Bidder.

15.02 If a Bidder wishes to modify its Bid prior to Bid opening, Bidder must withdraw its initial Bid in the manner specified in Paragraph 15.01 and submit a new Bid prior to the date and time for the opening of Bids.

15.03 If within 24 hours after Bids are opened any Bidder files a duly signed written notice with Owner and promptly thereafter demonstrates to the reasonable satisfaction of Owner that there was a material and substantial mistake in the preparation of its Bid, the Bidder may withdraw its Bid, and the Bid security will be returned. Thereafter, if the Work is rebid, the Bidder will be disqualified from further bidding on the Work.

ARTICLE 16—OPENING OF BIDS

16.01 Bids will be opened at the time and place indicated in the advertisement or invitation to bid and, unless obviously non-responsive, read aloud publicly. An abstract of the amounts of the base Bids and major alternates, if any, will be made available to Bidders after the opening of Bids.

ARTICLE 17—BIDS TO REMAIN SUBJECT TO ACCEPTANCE

17.01 All Bids will remain subject to acceptance for the period of time stated in the Bid Form, but Owner may, in its sole discretion, release any Bid and return the Bid security prior to the end of this period.

ARTICLE 18—EVALUATION OF BIDS AND AWARD OF CONTRACT

18.01 Owner reserves the right to reject any or all Bids, including without limitation, nonconforming, nonresponsive, unbalanced, or conditional Bids. Owner also reserves the right to waive all minor Bid informalities not involving price, time, or changes in the Work.

18.02 Owner will reject the Bid of any Bidder that Owner finds, after reasonable inquiry and evaluation, to not be responsible.

18.03 If Bidder purports to add terms or conditions to its Bid, takes exception to any provision of the Bidding Documents, or attempts to alter the contents of the Contract Documents for purposes of the Bid, whether in the Bid itself or in a separate communication to Owner or Engineer, then Owner will reject the Bid as nonresponsive.

18.04 If Owner awards the contract for the Work, such award will be to the responsible Bidder submitting the lowest responsive Bid.

18.05 *Evaluation of Bids*

A. In evaluating Bids, Owner will consider whether the Bids comply with the prescribed requirements, and such alternates, unit prices, and other data, as may be requested in the Bid Form or prior to the Notice of Award.

Copyright© 2018 National Society of Professional Engineers, American Council of Engineering Companies, and American Society of Civil Engineers. All rights reserved.

B. In the comparison of Bids, alternates will be applied in the same order of priority as listed in the Bid Form. To determine the Bid prices for purposes of comparison, Owner will announce to all bidders a "Base Bid plus alternates" budget after receiving all Bids, but prior to opening them. For comparison purposes alternates will be accepted, following the order of priority established in the Bid Form, until doing so would cause the budget to be exceeded. After determination of the Successful Bidder based on this comparative process and on the responsiveness, responsibility, and other factors set forth in these Instructions, the award may be made to said Successful Bidder on its base Bid and any combination of its additive alternate Bids for which Owner determines funds will be available at the time of award.

C. For determination of the apparent low Bidder(s) when sectional bids are submitted, Bids will be compared on the basis of the aggregate of the Bids for separate sections and the Bids for combined sections that result in the lowest total amount for all of the Work.

D. For the determination of the apparent low Bidder when unit price bids are submitted, Bids will be compared on the basis of the total of the products of the estimated quantity of each item and unit price Bid for that item, together with any lump sum items.

E. **Deleted**

1. **Deleted**

18.06 In evaluating whether a Bidder is responsible, Owner will consider the qualifications of the Bidder and may consider the qualifications and experience of Subcontractors and Suppliers proposed for those portions of the Work for which the identity of Subcontractors and Suppliers must be submitted as provided in the Bidding Documents.

18.07 Owner may conduct such investigations as Owner deems necessary to establish the responsibility, qualifications, and financial ability of Bidders and any proposed Subcontractors or Suppliers.

ARTICLE 19—BONDS AND INSURANCE

19.01 Article 6 of the General Conditions, as may be modified by the General Conditions, sets forth Owner's requirements as to performance and payment bonds, other required bonds (if any), and insurance. When the Successful Bidder delivers the executed Agreement to Owner, it must be accompanied by required bonds and insurance documentation.

19.02 Article 8, Bid Security, of these Instructions, addresses any requirements for providing bid bonds as part of the bidding process.

ARTICLE 20—SIGNING OF AGREEMENT

20.01 When Owner issues a Notice of Award to the Successful Bidder, it will be accompanied by the unexecuted counterparts of the Agreement along with the other Contract Documents as identified in the Agreement. Within 15 days thereafter, Successful Bidder must execute and deliver the required number of counterparts of the Agreement and any bonds and insurance documentation required to be delivered by the Contract Documents to Owner. Within 10 days thereafter, Owner will deliver one fully executed counterpart of the Agreement to Successful Bidder, together with printed and electronic copies of the Contract Documents as stated in Paragraph 2.02 of the General Conditions.

ARTICLE 21—SALES AND USE TAXES

Copyright© 2018 National Society of Professional Engineers, American Council of Engineering Companies, and American Society of Civil Engineers. All rights reserved.

21.01 Owner is exempt from **Illinois** state sales and use taxes on materials and equipment to be incorporated in the Work. (Exemption No. **[number]**). Said taxes must not be included in the Bid. Refer to Paragraph SC-7.10 of the General Conditions for additional information.

ARTICLE 22—CONTRACTS TO BE ASSIGNED

22.01 *Not Applicable.*

ARTICLE 23—BIDDER CERTIFICATION

23.01 BIDDER certifies that wages paid in connection with the PROJECT shall be paid at prevailing rates not less than those prevailing under the Davis-Bacon Wage Act. Bidder further certifies that the provisions contained in the following clauses will be exercised in the performance of any contract resulting from this BID and are made a part of the CONTRACT DOCUMENTS thereto by their inclusion in the BID as follows:

A. *Minimum wages*:

1. All laborers and mechanics employed or working upon the site of the work, will be paid unconditionally and not less often than once a week, and without subsequent deduction or rebate on any account (except such payroll deductions as are permitted by regulations issued by the Secretary of Labor under the Copeland Act (29 CFR part 3)), the full amount of wages and bona fide fringe benefits (or cash equivalents thereof) due at time of payment computed at rates not less than those contained in the wage determination of the Secretary of Labor which is attached hereto and made a part hereof, regardless of any contractual relationship which may be alleged to exist between the contractor and such laborers and mechanics. Contributions made or costs reasonably anticipated for bona fide fringe benefits under section 1(b)(2) of the Davis Bacon Act on behalf of laborers or mechanics are considered wages paid to such laborers or mechanics, subject to the provisions of paragraph (a)(1)(iv) of this section; also, regular contributions made or costs incurred for more than a weekly period (but not less often than quarterly) under plans, funds, or programs which cover the particular weekly period, are deemed to be constructively made or incurred during such weekly period. Such laborers and mechanics shall be paid the appropriate wage rate and fringe benefits on the wage determination for the classification of work actually performed, without regard to skill, except as provided in §5.5(a)(4). Laborers or mechanics performing work in more than one classification may be compensated at the rate specified for each classification for the time actually worked therein: Provided, that the employer's payroll records accurately set forth the time spent in each classification in which work is performed. The wage determination (including any additional classification and wage rates conformed under paragraph (a)(1)(ii) of this section) and the Davis Bacon poster (WH-1321) shall be posted at all times by the contractor and its subcontractors at the site of the work in a prominent and accessible place where it can be easily seen by the workers. Sub recipients may obtain wage determinations from the U.S. Department of Labor's web site, https://sam.gov/.

2.

a. The sub-recipient, on behalf of USEPA, shall require that any class of laborers or

Copyright© 2018 National Society of Professional Engineers, American Council of Engineering Companies, and American Society of Civil Engineers. All rights reserved.

mechanics, including helpers, which is not listed in the wage determination, and which is to be employed under the contract shall be classified in conformance with the wage determination. The USEPA award official shall approve an additional classification and wage rate and fringe benefits therefore only when the following criteria have been met:

i. The work to be performed by the classification requested is not performed by a classification in the wage determination; and

ii. The classification is utilized in the area by the construction industry; and

iii. The proposed wage rate, including any bona fide fringe benefits, bears a reasonable relationship to the wage rates contained in the wage determination.

b. If the contractor and the laborers and mechanics to be employed in the classification (if known), or their representatives, and the sub-recipient agree on the classification and wage rate (including the amount designated for fringe benefits where appropriate), a report of the action taken shall be sent by the sub-recipient to Illinois EPA. Illinois EPA shall forward the report to the Administrator of the Wage and Hour Division, U.S. Department of Labor, Washington, DC 20210. The Administrator, or an authorized representative, will approve, modify, or disapprove every additional classification action within 30 days of receipt and so advise Illinois EPA or will notify Illinois EPA within the 30-day period that additional time is necessary.

c. In the even the contractor, the laborers or mechanics to be employed in the classification or their representatives, and the sub-recipient do not agree on the proposed classification and wage rate (including the amount designated for fringe benefits, where appropriate), Illinois EPA shall refer the questions, including the views of all interested parties and the recommendation of the sub-recipient, to the Administrator for determination. The Administrator, or an authorized representative, will issue a determination within 30 days of receipt and so advise Illinois EPA or will notify Illinois EPA within the 30-day period that additional time is necessary.

d. The wage rate (including fringe benefits where appropriate) determined pursuant to paragraphs (a)(1)(ii)(B) or (C) of this section, shall be paid to all workers performing work in the classification under this contract from the first day on which work is performed in the classification.

3. Whenever the minimum wage rate prescribed in the contract for a class of laborers or mechanics includes a fringe benefit which is not expressed as an hourly rate, the contractor shall either pay the benefit as stated in the wage determination or shall pay another bona fide fringe benefit or an hourly cash equivalent thereof.

4. If the contractor does not make payments to a trustee or other third person, the

Copyright© 2018 National Society of Professional Engineers, American Council of Engineering Companies, and American Society of Civil Engineers. All rights reserved.

contractor may consider as part of the wages of any laborer or mechanic the amount of any costs reasonably anticipated in providing bona fide fringe benefits under a plan or program, Provided, that the Secretary of Labor has found, upon the written request of the contractor, that the applicable standards of the Davis Bacon Act have been met. The Secretary of Labor may require the contractor to set aside, in a separate account, assets for the meeting of obligations under the plan or program.

B. *Withholding.* The sub-recipient shall upon its own action or upon written request of an authorized representative of the Department of Labor withhold or cause to be withheld from the contractor under this contract or any other Federal contract with the same prime contractor, or any other federally-assisted contract subject to Davis Bacon prevailing wage requirements, which is held by the same prime contractor, so much of the accrued payments or advances as may be considered necessary to pay laborers and mechanics, including apprentices, trainees, and helpers, employed by the contractor or any subcontractor the full amount of wages required by the contract. In the event of failure to pay any laborer or mechanic, including any apprentice, trainee, or helper, employed or working on the site of the work, all or part of the wages required by the contract, the sub-recipient may, after written notice to the contractor, sponsor, applicant, or owner, take such action as may be necessary to cause the suspension of any further payment, advance, or guarantee of funds until such violations have ceased.

C. *Payrolls and basic records.*

1. Payrolls and basic records relating thereto shall be maintained by the contractor during the course of the work and preserved for a period of three years thereafter for all laborers and mechanics working at the site of the work. Such records shall contain the name, address, and social security number of each such worker, his or her correct classification, hourly rates of wages paid (including rates of contributions or costs anticipated for bona fide fringe benefits or cash equivalents thereof of the types described in section 1(b)(2)(B) of the Davis Bacon Act), daily and weekly number of hours worked, deductions made and actual wages paid. Whenever the Secretary of Labor has found under 29 CFR 5.5(a)(1)(iv) that the wages of any laborer or mechanic include the amount of any costs reasonably anticipated in providing benefits under a plan or program described in section 1(b)(2)(B) of the Davis Bacon Act, the contractor shall maintain records which show that the commitment to provide such benefits is enforceable, that the plan or program is financially responsible, and that the plan or program has been communicated in writing to the laborers or mechanics affected, and records which show the costs anticipated or the actual cost incurred in providing such benefits. Contractors employing apprentices or trainees under approved programs shall maintain written evidence of the registration of apprenticeship programs and certification of trainee programs, the registration of the apprentices and trainees, and the ratios and wage rates prescribed in the applicable programs.

2.

   a. The contractor shall submit weekly for each week in which any contract work is performed a copy of all payrolls to the sub-recipient. Such documentation shall be available upon request of Illinois EPA or USEPA. The payrolls submitted shall set out accurately and completely all of the information required to be

Copyright© 2018 National Society of Professional Engineers, American Council of Engineering Companies, and American Society of Civil Engineers. All rights reserved.

maintained under 29 CFR 5.5(a)(3)(i), except that full social security numbers and home addresses shall not be included on weekly transmittals. Instead the payrolls shall only need to include an individually identifying number for each employee (e.g., the last four digits of the employee's social security number). The required weekly payroll information may be submitted in any form desired. Optional Form WH-347 is available for this purpose from the Wage and Hour Division Website, [https://beta.dol.gov/forms-posters/forms/wh-347-davis-bacon-and-related-acts-weekly-certified-payroll-form]. The prime contractor is responsible for the submission of copies of payrolls by all subcontractors. Contractors and subcontractors shall maintain the full social security number and current address of each covered worker and shall provide them upon request to the sub-recipient, for transmission to the Illinois EPA, USEPA, the contractor, or the Wage and Hour Division of the Department of Labor for purposes of an investigation or audit of compliance with prevailing wage requirements. It is not a violation of this section for a prime contractor to require a subcontractor to provide addresses and social security numbers to the prime contractor for its own records, without weekly submission to the sub-recipient.

b. Each payroll submitted shall be accompanied by a "Statement of Compliance," signed by the contractor or subcontractor or his or her agent who pays or supervises the payment of the persons employed under the contract and shall certify the following:

    i. That the payroll for the payroll period contains the information required to be provided under §5.5 (a)(3)(ii) of Regulations, 29 CFR part 5, the appropriate information is being maintained under §5.5 (a)(3)(i) of Regulations, 29 CFR part 5, and that such information is correct and complete;

    ii. That each laborer or mechanic (including each helper, apprentice, and trainee) employed on the contract during the payroll period has been paid the full weekly wages earned, without rebate, either directly or indirectly, and that no deductions have been made either directly or indirectly from the full wages earned, other than permissible deductions as set forth in Regulations, 29 CFR part 3;

    iii. That each laborer or mechanic has been paid not less than the applicable wage rates and fringe benefits or cash equivalents for the classification of work performed, as specified in the applicable wage determination incorporated into the contract.

c. The weekly submission of a properly executed certification set forth on the reverse side of Optional Form WH-347 shall satisfy the requirement for submission of the "Statement of Compliance" required by paragraph (a)(3)(ii)(B) of this section.

d. The falsification of any of the above certifications may subject the contractor or

Copyright© 2018 National Society of Professional Engineers, American Council of Engineering Companies, and American Society of Civil Engineers. All rights reserved.

subcontractor to civil or criminal prosecution under section 1001 of title 18 and section 231 of title 31 of the United States Code.

3. The contractor or subcontractor shall make the records required under paragraph (a)(3)(i) of this section available for inspection, copying, or transcription by authorized representatives of Illinois EPA, USEPA or the Department of Labor, and shall permit such representatives to interview employees during working hours on the job. If the contractor or subcontractor fails to submit the required records or to make them available, the Federal agency may, after written notice to the contractor, sponsor, applicant, or owner, take such action as may be necessary to cause the suspension of any further payment, advance, or guarantee of funds. Furthermore, failure to submit the required records upon request or to make such records available may be grounds for debarment action pursuant to 29 CFR 5.12.

D. *Apprentices and trainees*

1. Apprentices. Apprentices will be permitted to work at less than the predetermined rate for the work they performed when they are employed pursuant to and individually registered in a bona fide apprenticeship program registered with the U.S. Department of Labor, Employment and Training Administration, Office of Apprenticeship Training, Employer and Labor Services, or with a State Apprenticeship Agency recognized by the Office, or if a person is employed in his or her first 90 days of probationary employment as an apprentice in such apprenticeship program, who is not individually registered in the program, but who has been certified by the Office of Apprenticeship Training, Employer and Labor Services, or a State Apprenticeship Agency (where appropriate) to be eligible for probationary employment as an apprentice. The allowable ratio of apprentices to journeymen on the job site in any craft classification shall not be greater than the ratio permitted to the contractor as to the entire work force under the registered program. Any worker listed on a payroll at an apprentice wage rate, who is not registered or otherwise employed as stated above, shall be paid not less than the applicable wage rate on the wage determination for the classification of work actually performed. In addition, any apprentice performing work on the job site in excess of the ratio permitted under the registered program shall be paid no less than the applicable wage rate on the wage determination for the work actually performed. Where a contractor is performing construction on a project in a locality other than that in which its program is registered, the ratios and wage rates (expressed in percentages of the journeyman's hourly rate) specified in the contractor's or subcontractor's registered program shall be observed. Every apprentice must be paid at not less than the rate specified in the registered program for the apprentice's level of progress, expressed as a percentage of the journeymen hourly rate specified in the applicable wage determination. Apprentices shall be paid fringe benefits in accordance with the provisions of the apprenticeship program. If the apprenticeship program does not specify fringe benefits, apprentices must be paid the full amount of fringe benefits listed on the wage determination for the applicable classification. If the Administrator determines that a different practice prevails for the applicable apprentice classification, fringes shall be paid in accordance with that determination. In the event the Office of Apprenticeship Training, Employer and Labor Services, or a State Apprenticeship Agency recognized by the Office, withdraws approval of an apprenticeship program,

Copyright© 2018 National Society of Professional Engineers, American Council of Engineering Companies, and American Society of Civil Engineers. All rights reserved.

the contractor will no longer be permitted to utilize apprentices at less than the applicable predetermined rate for the work performed until an acceptable program is approved.

2. Trainees. Except as provided in 29 CFR 5.16, trainees will not be permitted to work at less than the predetermined rate for the work performed unless they are employed pursuant to and individually registered in a program which has received prior approval, evidenced by form certification by the U.S. Department of Labor, Employment and Training Administration. The ratio of trainees to journeymen on the job site shall not be greater than permitted under the plan approved by the Employment and Training Administration. Every trainee must be paid at not less than the rate specified in the approved program for the trainee's level of progress, expressed as a percentage of the journeyman hourly rate specified in the applicable wage determination. Trainees shall be paid fringe benefits in accordance with the provisions of the trainee program. If the trainee program does not mention fringe benefits, trainees shall be paid the full amount of fringe benefits listed on the wage determination unless the Administrator of the Wage and Hour Division determines that there is an apprenticeship program associated with the corresponding journeyman wage rate on the wage determination which provides for less than full fringe benefits for apprentices. Any employee listed on the payroll at a trainee rate who is not registered and participating in a training plan approved by the Employment and Training Administration shall be paid not less than the applicable wage rate on the wage determination for the classification of work actually performed. In addition, any trainee performing work on the job site in excess of the ratio permitted under the registered program shall be paid not less than the applicable wage rate on the wage determination for the work actually performed. In the event the Employment and Training Administration withdraws approval of a training program, the contractor will no longer be permitted to utilize trainees at less than the applicable predetermined rate for the work performed until an acceptable program is approved.

3. Equal employment opportunity. The utilization of apprentices, trainees and journeymen under this part shall be in conformity with the equal employment opportunity requirements of CFR part 30.

E. *Compliance with Copeland Act requirements.* The contractor shall comply with the requirements of 29 CFR part 3, which are incorporated by reference in this contract.

F. *Subcontracts.* The contractor or subcontractor shall insert in any subcontracts the clauses contained in 29 CFR 5.5(a)(1) through (10) and such other clauses as the USEPA may by appropriate instruction require, and also a clause requiring the subcontractors to include these clauses in any lower tier subcontracts. The prime contractor shall be responsible for the compliance by any subcontractor or lower tier subcontractor with all the contract clauses in 29 CFR 5.5.

G. *Contract termination: debarment.* A breach of the contract clauses in 29 CFR 5.5 may be grounds for termination of the contract, and for debarment as a contractor and a subcontractor as provided in 29 CFR 5.12.

Copyright© 2018 National Society of Professional Engineers, American Council of Engineering Companies, and American Society of Civil Engineers. All rights reserved.

H. *Compliance with Davis Bacon and Related Act requirements.* All rulings and interpretations of the Davis Bacon and Related Acts contained in 29 CFR parts 1, 3, and 5 are herein incorporated by reference in this contract.

I. *Disputes concerning labor standards*. Disputes arising out of the labor standards provisions of this contract shall not be subject to the general disputes clause of this contract. Such disputes shall be resolved in accordance with the procedures of the Department of Labor set forth in 29 CFR parts 5, 6, and 7. Disputes within the meaning of this clause include disputes between the contractor (or any of its subcontractors) and the contracting agency, the U.S. Department of Labor, or the employees or their representatives.

J. *Certification of eligibility.*

1. By entering into this contract, the contractor certifies that neither it (nor he or she) nor any person or firm who has an interest in the contractor's firm is a person or firm ineligible to be awarded Government contracts by virtue of section 3(a) of the Davis Bacon Act or 29 CFR 5.12(a)(1).

2. No part of this contract shall be subcontracted to any person or firm ineligible for award of a Government contract by virtue of section 3(a) of the Davis Bacon Act or 29 CFR 5.12(a)(1).

3. The penalty for making false statements in prescribed in the U.S. Criminal Code, 18 U.S.C. 1001

Contract Provision for Contracts in Excess of $100,000 - clauses (1) through (4) shall be inserted in full in any contract in excess of $100,000 and subject to the overtime provisions of the Contract Work Hours and Safety Standards Act.

23.02 **Contract Work Hours and Safety Standards Act**

A. *Overtime requirements.* No contractor or subcontractor contracting for any part of the contract work which may require or involve the employment of laborers or mechanics shall require or permit any such laborer or mechanic in any workweek in which he or she is employed on such work to work in excess of forty hours in such workweek unless such laborer or mechanics receives compensation at a rate not less than one and on-half times the basic rate of pay for all hours worked in excess of forty hours in such workweek.

B. *Violation; liability for unpaid wages; liquidated damages.* In the event of any violation of the clause set forth in paragraph (b)(1) of this section the contractor and any subcontractor responsible therefor shall be liable for the unpaid wages. In addition, such contractor and subcontractor shall be liable to the United States (in the case of work done under contract for the District of Columbia or a territory, to such District or to such territory), for liquidated damages. Such liquidated damages shall be computed with respect to each individual laborer or mechanics, including watchmen and guards, employed in violation of the clause set forth in paragraph (b)(1) of this section, in the sum of $25 for each calendar day on which such individual was required or permitted to work in excess of the standard workweek of forty hours without payment of the overtime wages required by the clause set forth in paragraph (b)(1) of this section.

Copyright© 2018 National Society of Professional Engineers, American Council of Engineering Companies, and American Society of Civil Engineers. All rights reserved.

C. *Withholding for unpaid wages and liquidated damages.* The sub-recipient, shall upon its own action or upon written request of the USEPA award official or an authorized representative of the Department of Labor, withhold or cause to be withheld, from any moneys payable on account of work performed by the contractor or subcontractor under any such contract or any other Federal contract with the same prime contractor, or any other federally-assisted contract subject to the Contract Work Hours and Safety Standards Act, which is held by the same prime contractor, such sums as may be determined to be necessary to satisfy any liabilities of such contractor or subcontractor for unpaid wages and liquidated damages as provided in the clause set forth in paragraph (b)(2) of this section.

D. *Subcontracts.* The contractor or subcontractor shall insert in any subcontracts the clauses set forth in paragraph (b)(1) through (4) of this section and also a clause requiring the subcontractors to include these clauses in any lower tier subcontracts. The prime contractor shall be responsible for compliance by any subcontractor or lower tier subcontractor with the clauses set forth in paragraphs (b)(1) through (4) of this section.

*******See current Davis-Bacon Wage Rates located after Standard General Conditions *******

23.03 The contractor or subcontractor shall maintain payrolls and basic payroll records during the course of the work and shall preserve them for a period of three years from the completion of the contract for all laborers and mechanics, including guards and watchmen, working on the contract. Such records shall contain the name and address of each such employee, social security number, correct classifications, hourly rates of wages paid, daily and weekly number of hours worked, deductions made, and actual wages paid. Further, the records to be maintained under this paragraph shall be made available by the contractor or subcontractor for inspection, copying, or transcription by authorized representatives of the USEPA and the Department of Labor, and the contractor or subcontractor will permit such representatives to interview employees during working hours on the job.

Copyright© 2018 National Society of Professional Engineers, American Council of Engineering Companies, and American Society of Civil Engineers. All rights reserved.

BID FORM FOR CONSTRUCTION CONTRACT

The terms used in this Bid with initial capital letters have the meanings stated in the Instructions to Bidders~~,~~ and the General Conditions~~, and the Supplementary Conditions~~.

ARTICLE 1—OWNER AND BIDDER

1.01 This Bid is submitted to:

Allen Davenport, Board President
Illinois Alluvial Regional Water Company, Inc.
1009 State Highway 16, Jerseyville, IL 62052

1.02 The undersigned Bidder proposes and agrees, if this Bid is accepted, to enter into an Agreement with Owner in the form included in the Bidding Documents to perform all Work as specified or indicated in the Bidding Documents for the prices and within the times indicated in this Bid and in accordance with the other terms and conditions of the Bidding Documents.

ARTICLE 2—ATTACHMENTS TO THIS BID

2.01 The following documents are submitted with and made a condition of this Bid:

A. Required Bid security;

B. List of Proposed Subcontractors;

C. List of Proposed Suppliers;

D. Evidence of authority to do business in the state of the Project; or a written covenant to obtain such authority within the time for acceptance of Bids;

E. Contractor's license number as evidence of Bidder's State Contractor's License or a covenant by Bidder to obtain said license within the time for acceptance of Bids;

F. Required Bidder Qualification Statement with supporting data; and

G. **Non-Collusion and Certification Statements**

H. **Certification of Nonsegregated Facilities**

I. **Certificate Regarding Bid Rigging & Rotating (Criminal Code 33E)**

J. **Certificate Regarding Debarment, Suspension, and Other Responsibility Matters**

K. **Certification that all iron, steel manufactured products and construction materials used for this project must be produced in the United States. [Build America, Buy America Act]**

L. **Disadvantaged Business Utilization and Affirmative Efforts**

ARTICLE 3—BASIS OF BID—LUMP SUM BID AND UNIT PRICES

3.01 *Unit Price Bids*

A. Bidder will perform the following Work at the indicated unit prices:

Copyright© 2018 National Society of Professional Engineers, American Council of Engineering Companies, and American Society of Civil Engineers. All rights reserved.

Base Bid A – Contract F					
Item No.	**Description**	**Unit**	**Estimated Quantity**	**Bid Unit Price**	**Bid Amount**
1	36” HDPE PIPE, CLASS 200	LF	30,131	$	$
2	DUCTILE IRON CLASS 250 OR HDPE CLASS 200, 36" - 90 DEGREE BEND	EA	2	$	$
3	DUCTILE IRON CLASS 250 OR HDPE CLASS 200, 36" CAP	EA	2	$	$
4	FIRE HYDRANT WITH GATE VALVE AND VALVE BOX	EA	8	$	$
5	ST MARYS ROAD CROSSING - JACK AND BORE 48" STEEL OUTER CASING INCLUDES CARRIER PIPE	LF	40	$	$
6	BETHANY CHURCH ROAD CROSSING - JACK AND BORE 48" STEEL OUTER CASING INCLUDES CARRIER PIPE	LF	60	$	$
7	CENTRAL ROAD CROSSING - JACK AND BORE 48" STEEL OUTER CASING INCLUDES CARRIER PIPE	LF	60	$	$
8	COSTELLO ROAD CROSSING - JACK AND BORE 48" STEEL OUTER CASING INCLUDES CARRIER PIPE	LF	40	$	$
9	STATE HIGHWAY 16 CROSSING - JACK AND BORE 48" STEEL OUTER CASING INCLUDES CARRIER PIPE	LF	60	$	$
10	OTTERVILLE ROAD CROSSING - JACK AND BORE 48" STEEL OUTER CASING INCLUDES CARRIER PIPE	LF	65	$	$
11	DIRECTIONAL BORE ST MARYS ROAD CROSSING - 1-1/4" HDPE SDR 11 FIBER OPTIC CONDUIT	LF	40	$	$
12	DIRECTIONAL BORE BETHANY CHURCH ROAD CROSSING - 1-1/4" HDPE SDR 11 FIBER OPTIC CONDUIT	LF	60	$	$
13	DIRECTIONAL BORE CENTRAL ROAD CROSSING - 1-1/4" HDPE SDR 11 FIBER OPTIC CONDUIT	LF	60	$	$
14	DIRECTIONAL BORE COSTELLO ROAD CROSSING - 1-1/4" HDPE SDR 11 FIBER OPTIC CONDUIT	LF	40	$	$
15	DIRECTIONAL BORE STATE HIGHWAY 16 CROSSING - 1-1/4" HDPE SDR 11 FIBER OPTIC CONDUIT	LF	60	$	$

Copyright© 2018 National Society of Professional Engineers, American Council of Engineering Companies, and American Society of Civil Engineers. All rights reserved.

16	DIRECTIONAL BORE OTTERVILLE ROAD CROSSING - 1-1/4" HDPE SDR 11 FIBER OPTIC CONDUIT	LF	65		
17	EROSION CONTROL	LS	1		
18	SEEDING, FERTILIZING, MULCHING, SOIL TESTING, RIPPING	LS	1		
19	FENCE REPAIR	LF	40		
20	DRAIN TILE REPAIR	EA	30		
21	BACKFILL TYPICAL	LF	29,380	$	$
22	BACKFILL TYPE 5 FULL DEPTH	LF	426	$	$
23	6" AIR RELEASE VALVE, 72" DIAMETER VAULT, AND 6" PIPE	EA	14	$	$
24	1-1/4" HDPE CONDUIT, SDR 11	LF	29,806	$	$
25	24" X 36" X 36" HDPE FIBER OPTIC HANDHOLD	EA	14	$	$
26	12"X12"X12" HDPE FIBER OPTIC HANDHOLD - BURIED	EA	25	$	$
27	24 STRAND SINGLE MODE FIBER WITH ARMORED SHIELD	LF	32,031	$	$
28	EXPLORATORY DIG - EXISTING UTILITY	EA	10	$	$
29	ROCK EXCAVATION	CY	500	$	$
Total of All Unit Price Bid Items					$

Dollars

(In Words)

B. Bidder acknowledges that:

1. each Bid Unit Price includes an amount considered by Bidder to be adequate to cover Contractor's overhead and profit for each separately identified item, and

2. estimated quantities are not guaranteed, and are solely for the purpose of comparison of Bids, and final payment for all Unit Price Work will be based on actual quantities, determined as provided in the Contract Documents.

3.02 *Total Bid Price (Lump Sum and Unit Prices)*

Total Bid Price (Total of all Lump Sum and Unit Price Bids)	$

Copyright© 2018 National Society of Professional Engineers, American Council of Engineering Companies, and American Society of Civil Engineers. All rights reserved.

ARTICLE 4—TIME OF COMPLETION

4.01 Bidder agrees that the Work will be substantially complete and will be completed and ready for final payment in accordance with Paragraph 15.06 of the General Conditions on or before the dates or within the number of calendar days indicated in the Agreement.

4.02 Bidder accepts the provisions of the Agreement as to liquidated damages.

ARTICLE 5—BIDDER'S ACKNOWLEDGEMENTS: ACCEPTANCE PERIOD, INSTRUCTIONS, AND RECEIPT OF ADDENDA

5.01 *Bid Acceptance Period*

A. This Bid will remain subject to acceptance for 120 days after the Bid opening, or for such longer period of time that Bidder may agree to in writing upon request of Owner.

5.02 *Instructions to Bidders*

A. Bidder accepts all of the terms and conditions of the Instructions to Bidders, including without limitation those dealing with the disposition of Bid security.

5.03 *Receipt of Addenda*

A. Bidder hereby acknowledges receipt of the following Addenda:

Addendum Number	Addendum Date

ARTICLE 6—BIDDER'S REPRESENTATIONS AND CERTIFICATIONS

6.01 *Bidder's Representations*

A. In submitting this Bid, Bidder represents the following:

1. Bidder has examined and carefully studied the Bidding Documents, including Addenda.
2. Bidder has visited the Site, conducted a thorough visual examination of the Site and adjacent areas, and become familiar with the general, local, and Site conditions that may affect cost, progress, and performance of the Work.
3. Bidder is familiar with all Laws and Regulations that may affect cost, progress, and performance of the Work.
4. Bidder has carefully studied the reports of explorations and tests of subsurface conditions at or adjacent to the Site and the drawings of physical conditions relating to existing surface or subsurface structures at the Site that have been identified in the ~~Supplementary~~General Conditions, with respect to the Technical Data in such reports and drawings.
5. Bidder has carefully studied the reports and drawings relating to Hazardous Environmental Conditions, if any, at or adjacent to the Site that have been identified in

Copyright© 2018 National Society of Professional Engineers, American Council of Engineering Companies, and American Society of Civil Engineers. All rights reserved.

the ~~Supplementary~~General Conditions, with respect to Technical Data in such reports and drawings.

6. Bidder has considered the information known to Bidder itself; information commonly known to contractors doing business in the locality of the Site; information and observations obtained from visits to the Site; the Bidding Documents; and the Technical Data identified in the ~~Supplementary~~General Conditions or by definition, with respect to the effect of such information, observations, and Technical Data on (a) the cost, progress, and performance of the Work; (b) the means, methods, techniques, sequences, and procedures of construction to be employed by Bidder, if selected as Contractor; and (c) Bidder's (Contractor's) safety precautions and programs.

7. Based on the information and observations referred to in the preceding paragraph, Bidder agrees that no further examinations, investigations, explorations, tests, studies, or data are necessary for the performance of the Work at the Contract Price, within the Contract Times, and in accordance with the other terms and conditions of the Contract.

8. Bidder is aware of the general nature of work to be performed by Owner and others at the Site that relates to the Work as indicated in the Bidding Documents.

9. Bidder has given Engineer written notice of all conflicts, errors, ambiguities, or discrepancies that Bidder has discovered in the Bidding Documents, and of discrepancies between Site conditions and the Contract Documents, and the written resolution thereof by Engineer is acceptable to Contractor.

10. The Bidding Documents are generally sufficient to indicate and convey understanding of all terms and conditions for performance and furnishing of the Work.

11. The submission of this Bid constitutes an incontrovertible representation by Bidder that without exception the Bid and all prices in the Bid are premised upon performing and furnishing the Work required by the Bidding Documents.

6.02 *Bidder's Certifications*

A. The Bidder certifies the following:

1. This Bid is genuine and not made in the interest of or on behalf of any undisclosed individual or entity and is not submitted in conformity with any collusive agreement or rules of any group, association, organization, or corporation.

2. Bidder has not directly or indirectly induced or solicited any other Bidder to submit a false or sham Bid.

3. Bidder has not solicited or induced any individual or entity to refrain from bidding.

4. Bidder has not engaged in corrupt, fraudulent, collusive, or coercive practices in competing for the Contract. For the purposes of this Paragraph 8.02.A:

   a. Corrupt practice means the offering, giving, receiving, or soliciting of anything of value likely to influence the action of a public official in the bidding process.

   b. Fraudulent practice means an intentional misrepresentation of facts made (a) to influence the bidding process to the detriment of Owner, (b) to establish bid prices at artificial non-competitive levels, or (c) to deprive Owner of the benefits of free and open competition.

Copyright© 2018 National Society of Professional Engineers, American Council of Engineering Companies, and American Society of Civil Engineers. All rights reserved.

c. Collusive practice means a scheme or arrangement between two or more Bidders, with or without the knowledge of Owner, a purpose of which is to establish bid prices at artificial, non-competitive levels.

d. Coercive practice means harming or threatening to harm, directly or indirectly, persons or their property to influence their participation in the bidding process or affect the execution of the Contract.

Bidder is currently certified as an MBE or WBE under EPA's DBE Program? Yes ☐ No ☐

Copyright© 2018 National Society of Professional Engineers, American Council of Engineering Companies, and American Society of Civil Engineers. All rights reserved.

BIDDER hereby submits this Bid as set forth above:

Bidder:

_____

(typed or printed name of organization)

By: _____

(individual's signature)

Name: _____

(typed or printed)

Title: _____

(typed or printed)

Date: _____

(typed or printed)

If Bidder is a corporation, a partnership, or a joint venture, attach evidence of authority to sign.

Attest: _____

(individual's signature)

Name: _____

(typed or printed)

Title: _____

(typed or printed)

Date: _____

(typed or printed)

Address for giving notices:

_____

_____

Bidder's Contact:

Name: _____

(typed or printed)

Title: _____

(typed or printed)

Phone: _____

Email: _____

Address:

_____

_____

_____

Bidder's Contractor License No.: (if applicable) _____

Copyright© 2018 National Society of Professional Engineers, American Council of Engineering Companies, and American Society of Civil Engineers. All rights reserved.

Intentionally Blank

BID BOND (PENAL SUM FORM)

Bidder Name: Address *(principal place of business)*:	**Surety** Name: Address *(principal place of business)*:
Owner Name: **Illinois Alluvial Regional Water Company, Inc.** Address *(principal place of business)*: **1009 State Highway 16, Jerseyville, IL 62052**	**Bid** Project *(name and location)*: **Phase 1b – To construct approximately 30,000lf of finished water transmission main and appurtenances.** Bid Due Date:
Bond Penal Sum: Date of Bond:	
Surety and Bidder, intending to be legally bound hereby, subject to the terms set forth in this Bid Bond, do each cause this Bid Bond to be duly executed by an authorized officer, agent, or representative.	
Bidder _____ *(Full formal name of Bidder)* By: _____ *(Signature)* Name: _____ *(Printed or typed)* Title: _____ Attest: _____ *(Signature)* Name: _____ *(Printed or typed)* Title:	Surety _____ *(Full formal name of Surety) (corporate seal)* By: _____ *(Signature) (Attach Power of Attorney)* Name: _____ *(Printed or typed)* Title: _____ Attest: _____ *(Signature)* Name: _____ *(Printed or typed)* Title:
Notes: (1) Note: Addresses are to be used for giving any required notice. (2) Provide execution by any additional parties, such as joint venturers, if necessary.	

Copyright© 2018 National Society of Professional Engineers, American Council of Engineering Companies, and American Society of Civil Engineers. All rights reserved.

1. Bidder and Surety, jointly and severally, bind themselves, their heirs, executors, administrators, successors, and assigns to pay to Owner upon default of Bidder the penal sum set forth on the face of this Bond. Payment of the penal sum is the extent of Bidder's and Surety's liability. Recovery of such penal sum under the terms of this Bond will be Owner's sole and exclusive remedy upon default of Bidder.
2. Default of Bidder occurs upon the failure of Bidder to deliver within the time required by the Bidding Documents (or any extension thereof agreed to in writing by Owner) the executed Agreement required by the Bidding Documents and any performance and payment bonds required by the Bidding Documents.
3. This obligation will be null and void if:
   3.1. Owner accepts Bidder's Bid and Bidder delivers within the time required by the Bidding Documents (or any extension thereof agreed to in writing by Owner) the executed Agreement required by the Bidding Documents and any performance and payment bonds required by the Bidding Documents, or
   3.2. All Bids are rejected by Owner, or
   3.3. Owner fails to issue a Notice of Award to Bidder within the time specified in the Bidding Documents (or any extension thereof agreed to in writing by Bidder and, if applicable, consented to by Surety when required by Paragraph 5 hereof).
4. Payment under this Bond will be due and payable upon default of Bidder and within 30 calendar days after receipt by Bidder and Surety of written notice of default from Owner, which notice will be given with reasonable promptness, identifying this Bond and the Project and including a statement of the amount due.
5. Surety waives notice of any and all defenses based on or arising out of any time extension to issue Notice of Award agreed to in writing by Owner and Bidder, provided that the total time for issuing Notice of Award including extensions does not in the aggregate exceed 120 days from the Bid due date without Surety's written consent.
6. No suit or action will be commenced under this Bond prior to 30 calendar days after the notice of default required in Paragraph 4 above is received by Bidder and Surety, and in no case later than one year after the Bid due date.
7. Any suit or action under this Bond will be commenced only in a court of competent jurisdiction located in the state in which the Project is located.
8. Notices required hereunder must be in writing and sent to Bidder and Surety at their respective addresses shown on the face of this Bond. Such notices may be sent by personal delivery, commercial courier, or by United States Postal Service registered or certified mail, return receipt requested, postage pre-paid, and will be deemed to be effective upon receipt by the party concerned.
9. Surety shall cause to be attached to this Bond a current and effective Power of Attorney evidencing the authority of the officer, agent, or representative who executed this Bond on behalf of Surety to execute, seal, and deliver such Bond and bind the Surety thereby.
10. This Bond is intended to conform to all applicable statutory requirements. Any applicable requirement of any applicable statute that has been omitted from this Bond will be deemed to be included herein as if set forth at length. If any provision of this Bond conflicts with any applicable statute, then the provision of said statute governs and the remainder of this Bond that is not in conflict therewith continues in full force and effect.
11. The term "Bid" as used herein includes a Bid, offer, or proposal as applicable.

Copyright© 2018 National Society of Professional Engineers, American Council of Engineering Companies, and American Society of Civil Engineers. All rights reserved.

QUALIFICATIONS STATEMENT

ARTICLE 1—GENERAL INFORMATION

1.01 Provide contact information for the Business:

Legal Name of Business:			
Corporate Office			
Name:		Phone number:	
Title:		Email address:	
Business address of corporate office:			
Local Office			
Name:		Phone number:	
Title:		Email address:	
Business address of local office:			

1.02 Provide information on the Business's organizational structure:

Form of Business:	☐ Sole Proprietorship ☐ Partnership ☐ Corporation		
☐ Limited Liability Company ☐ Joint Venture comprised of the following companies:			
	1.		
	2.		
	3.		
Provide a separate Qualification Statement for each Joint Venturer.			
Date Business was formed:		State in which Business was formed:	
Is this Business authorized to operate in the Project location?	☐ Yes ☐ No ☐ Pending		

1.03 Identify all businesses that own Business in whole or in part (25% or greater), or that are wholly or partly (25% or greater) owned by Business:

Name of business:		Affiliation:	
Address:			
Name of business:		Affiliation:	
Address:			
Name of business:		Affiliation:	
Address:			

Copyright© 2018 National Society of Professional Engineers, American Council of Engineering Companies, and American Society of Civil Engineers. All rights reserved.

1.04 Provide information regarding the Business's officers, partners, and limits of authority.

Name:		Title:	
Authorized to sign contracts: ☐ Yes ☐ No		Limit of Authority:	$
Name:		Title:	
Authorized to sign contracts: ☐ Yes ☐ No		Limit of Authority:	$
Name:		Title:	
Authorized to sign contracts: ☐ Yes ☐ No		Limit of Authority:	$
Name:		Title:	

ARTICLE 2—LICENSING

2.01 Provide information regarding licensure for Business:

Name of License:			
Licensing Agency:			
License No:		Expiration Date:	
Name of License:			
Licensing Agency:			
License No:		Expiration Date:	

ARTICLE 3—DIVERSE BUSINESS CERTIFICATIONS

3.01 Provide information regarding Business's Diverse Business Certification, if any. Provide evidence of current certification.

Certification		Certifying Agency	Certification Date
☐ Disadvantaged Business Enterprise			
☐ Minority Business Enterprise			
☐ Woman-Owned Business Enterprise			
☐ Small Business Enterprise			
☐ Disabled Business Enterprise			
☐ Veteran-Owned Business Enterprise			
☐ Service-Disabled Veteran-Owned Business			
☐ HUBZone Business (Historically Underutilized) Business			
☐ Other			
☐ None			

Copyright© 2018 National Society of Professional Engineers, American Council of Engineering Companies, and American Society of Civil Engineers. All rights reserved.

ARTICLE 4—SAFETY

4.01 Provide information regarding Business's safety organization and safety performance.

Name of Business's Safety Officer:		
Safety Certifications		
Certification Name	Issuing Agency	Expiration

4.02 Provide Worker's Compensation Insurance Experience Modification Rate (EMR), Total Recordable Frequency Rate (TRFR) for incidents, and Total Number of Recorded Manhours (MH) for the last 3 years and the EMR, TRFR, and MH history for the last 3 years of any proposed Subcontractor(s) that will provide Work valued at 10% or more of the Contract Price. Provide documentation of the EMR history for Business and Subcontractor(s).

Year									
Company	EMR	TRFR	MH	EMR	TRFR	MH	EMR	TRFR	MH

ARTICLE 5—FINANCIAL

5.01 Provide information regarding the Business's financial stability. Provide the most recent audited financial statement, and if such audited financial statement is not current, also provide the most current financial statement.

Financial Institution:		
Business address:		
Date of Business's most recent financial statement:		☐ Attached
Date of Business's most recent audited financial statement:		☐ Attached
Financial indicators from the most recent financial statement		
Contractor's Current Ratio (Current Assets ÷ Current Liabilities)		
Contractor's Quick Ratio ((Cash and Cash Equivalents + Accounts Receivable + Short Term Investments) ÷ Current Liabilities)		

Copyright© 2018 National Society of Professional Engineers, American Council of Engineering Companies, and American Society of Civil Engineers. All rights reserved.

ARTICLE 6—SURETY INFORMATION

6.01 Provide information regarding the surety company that will issue required bonds on behalf of the Business, including but not limited to performance and payment bonds.

Surety Name:			
Surety is a corporation organized and existing under the laws of the state of:			
Is surety authorized to provide surety bonds in the Project location?		☐ Yes ☐ No	
Is surety listed in "Companies Holding Certificates of Authority as Acceptable Sureties on Federal Bonds and as Acceptable Reinsuring Companies" published in Department Circular 570 (as amended) by the Bureau of the Fiscal Service, U.S. Department of the Treasury? ☐ Yes ☐ No			
Mailing Address (principal place of business):			
Physical Address (principal place of business):			
Phone (main):		Phone (claims):	

ARTICLE 7—INSURANCE

7.01 Provide information regarding Business's insurance company(s), including but not limited to its Commercial General Liability carrier. Provide information for each provider.

Name of insurance provider, and type of policy (CLE, auto, etc.):			
Insurance Provider		Type of Policy (Coverage Provided)	
Are providers licensed or authorized to issue policies in the Project location?			☐ Yes ☐ No
Does provider have an A.M. Best Rating of A-VII or better?			☐ Yes ☐ No
Mailing Address (principal place of business):			
Physical Address (principal place of business):			
Phone (main):		Phone (claims):	

Copyright© 2018 National Society of Professional Engineers, American Council of Engineering Companies, and American Society of Civil Engineers. All rights reserved.

ARTICLE 8—CONSTRUCTION EXPERIENCE

8.01 Provide information that will identify the overall size and capacity of the Business.

Average number of current full-time employees:	
Estimate of revenue for the current year:	
Estimate of revenue for the previous year:	

8.02 Provide information regarding the Business's previous contracting experience.

Years of experience with projects like the proposed project:				
As a general contractor:		As a joint venturer:		
Has Business, or a predecessor in interest, or an affiliate identified in Paragraph 1.03:				
Been disqualified as a bidder by any local, state, or federal agency within the last 5 years? ☐ Yes ☐ No				
Been barred from contracting by any local, state, or federal agency within the last 5 years? ☐ Yes ☐ No				
Been released from a bid in the past 5 years? ☐ Yes ☐ No				
Defaulted on a project or failed to complete any contract awarded to it? ☐ Yes ☐ No				
Refused to construct or refused to provide materials defined in the contract documents or in a change order? ☐ Yes ☐ No				
Been a party to any currently pending litigation or arbitration? ☐ Yes ☐ No				
Provide full details in a separate attachment if the response to any of these questions is Yes.				

8.03 List all projects currently under contract in Schedule A and provide indicated information.

8.04 List a minimum of three and a maximum of six projects completed in the last 5 years in Schedule B and provide indicated information to demonstrate the Business's experience with projects similar in type and cost of construction.

8.05 In Schedule C, provide information on key individuals whom Business intends to assign to the Project. Provide resumes for those individuals included in Schedule C. Key individuals include the Project Manager, Project Superintendent, Quality Manager, and Safety Manager. Resumes may be provided for Business's key leaders as well.

ARTICLE 9—REQUIRED ATTACHMENTS

9.01 Provide the following information with the Statement of Qualifications:

A. If Business is a Joint Venture, separate Qualifications Statements for each Joint Venturer, as required in Paragraph 1.02.

B. Diverse Business Certifications if required by Paragraph 3.01.

C. Certification of Business's safety performance if required by Paragraph 4.02.

D. Financial statements as required by Paragraph 5.01.

Copyright© 2018 National Society of Professional Engineers, American Council of Engineering Companies, and American Society of Civil Engineers. All rights reserved.

E. Attachments providing additional information as required by Paragraph 8.02.

F. Schedule A (Current Projects) as required by Paragraph 8.03.

G. Schedule B (Previous Experience with Similar Projects) as required by Paragraph 8.04.

H. Schedule C (Key Individuals) and resumes for the key individuals listed, as required by Paragraph 8.05.

I. Additional items as pertinent.

Copyright© 2018 National Society of Professional Engineers, American Council of Engineering Companies, and American Society of Civil Engineers. All rights reserved.

This Statement of Qualifications is offered by:

Business: _____
(typed or printed name of organization)

By: _____
(individual's signature)

Name: _____
(typed or printed)

Title: _____
(typed or printed)

Date: _____
(date signed)

(If Business is a corporation, a partnership, or a joint venture, attach evidence of authority to sign.)

Attest: _____
(individual's signature)

Name: _____
(typed or printed)

Title: _____
(typed or printed)

Address for giving notices:

_____

_____

_____

Designated Representative:

Name: _____
(typed or printed)

Title: _____
(typed or printed)

Address:

_____

_____

_____

Phone: _____

Email: _____

Copyright© 2018 National Society of Professional Engineers, American Council of Engineering Companies, and American Society of Civil Engineers. All rights reserved.

Intentionally Blank

Schedule A—Current Projects

Name of Organization					
Project Owner			Project Name		
General Description of Project					
Project Cost			Date Project		
Key Project Personnel	Project Manager	Project Superintendent	Safety Manager	Quality Control Manager	
Name					
Reference Contact Information (listing names indicates approval to contacting the names individuals as a reference)					
	Name	Title/Position	Organization	Telephone	Email
Owner					
Designer					
Construction Manager					

Project Owner			Project Name		
General Description of Project					
Project Cost			Date Project		
Key Project Personnel	Project Manager	Project Superintendent	Safety Manager	Quality Control Manager	
Name					
Reference Contact Information (listing names indicates approval to contacting the names individuals as a reference)					
	Name	Title/Position	Organization	Telephone	Email
Owner					
Designer					
Construction Manager					

Project Owner			Project Name		
General Description of Project					
Project Cost			Date Project		
Key Project Personnel	Project Manager	Project Superintendent	Safety Manager	Quality Control Manager	
Name					
Reference Contact Information (listing names indicates approval to contacting the names individuals as a reference)					
	Name	Title/Position	Organization	Telephone	Email
Owner					
Designer					
Construction Manager					

Copyright© 2018 National Society of Professional Engineers, American Council of Engineering Companies, and American Society of Civil Engineers. All rights reserved.

Intentionally Blank

Schedule B—Previous Experience with Similar Projects

Name of Organization					
Project Owner			Project Name		
General Description of Project					
Project Cost			Date Project		
Key Project Personnel	Project Manager	Project Superintendent	Safety Manager	Quality Control Manager	
Name					
Reference Contact Information (listing names indicates approval to contacting the names individuals as a reference)					
	Name	Title/Position	Organization	Telephone	Email
Owner					
Designer					
Construction Manager					

Project Owner			Project Name		
General Description of Project					
Project Cost			Date Project		
Key Project Personnel	Project Manager	Project Superintendent	Safety Manager	Quality Control Manager	
Name					
Reference Contact Information (listing names indicates approval to contacting the names individuals as a reference)					
	Name	Title/Position	Organization	Telephone	Email
Owner					
Designer					
Construction Manager					

Project Owner			Project Name		
General Description of Project					
Project Cost			Date Project		
Key Project Personnel	Project Manager	Project Superintendent	Safety Manager	Quality Control Manager	
Name					
Reference Contact Information (listing names indicates approval to contacting the names individuals as a reference)					
	Name	Title/Position	Organization	Telephone	Email
Owner					
Designer					
Construction Manager					

Copyright© 2018 National Society of Professional Engineers, American Council of Engineering Companies, and American Society of Civil Engineers. All rights reserved.

Schedule B—Previous Experience with Similar Projects

Name of Organization					
Project Owner			Project Name		
General Description of Project					
Project Cost			Date Project		
Key Project Personnel	Project Manager	Project Superintendent	Safety Manager	Quality Control Manager	
Name					
Reference Contact Information (listing names indicates approval to contacting the names individuals as a reference)					
	Name	Title/Position	Organization	Telephone	Email
Owner					
Designer					
Construction Manager					

Project Owner			Project Name		
General Description of Project					
Project Cost			Date Project		
Key Project Personnel	Project Manager	Project Superintendent	Safety Manager	Quality Control Manager	
Name					
Reference Contact Information (listing names indicates approval to contacting the names individuals as a reference)					
	Name	Title/Position	Organization	Telephone	Email
Owner					
Designer					
Construction Manager					

Project Owner			Project Name		
General Description of Project					
Project Cost			Date Project		
Key Project Personnel	Project Manager	Project Superintendent	Safety Manager	Quality Control Manager	
Name					
Reference Contact Information (listing names indicates approval to contacting the names individuals as a reference)					
	Name	Title/Position	Organization	Telephone	Email
Owner					
Designer					
Construction Manager					

Copyright© 2018 National Society of Professional Engineers, American Council of Engineering Companies, and American Society of Civil Engineers. All rights reserved.

Schedule C—Key Individuals

Project Manager			
Name of individual			
Years of experience as project manager			
Years of experience with this organization			
Number of similar projects as project manager			
Number of similar projects in other positions			
Current Project Assignments			
Name of assignment		Percent of time used for this project	Estimated project completion date
Reference Contact Information (listing names indicates approval to contact named individuals as a reference)			
Name		Name	
Title/Position		Title/Position	
Organization		Organization	
Telephone		Telephone	
Email		Email	
Project		Project	
Candidate's role on project		Candidate's role on project	
Project Superintendent			
Name of individual			
Years of experience as project superintendent			
Years of experience with this organization			
Number of similar projects as project superintendent			
Number of similar projects in other positions			
Current Project Assignments			
Name of assignment		Percent of time used for this project	Estimated project completion date
Reference Contact Information (listing names indicates approval to contact named individuals as a reference)			
Name		Name	
Title/Position		Title/Position	
Organization		Organization	
Telephone		Telephone	
Email		Email	
Project		Project	
Candidate's role on project		Candidate's role on project	

Copyright© 2018 National Society of Professional Engineers, American Council of Engineering Companies, and American Society of Civil Engineers. All rights reserved.

Safety Manager			
Name of individual			
Years of experience as project manager			
Years of experience with this organization			
Number of similar projects as project manager			
Number of similar projects in other positions			
Current Project Assignments			
Name of assignment		Percent of time used for this project	Estimated project completion date
Reference Contact Information (listing names indicates approval to contact named individuals as a reference)			
Name		Name	
Title/Position		Title/Position	
Organization		Organization	
Telephone		Telephone	
Email		Email	
Project		Project	
Candidate's role on project		Candidate's role on project	
Quality Control Manager			
Name of individual			
Years of experience as project superintendent			
Years of experience with this organization			
Number of similar projects as project superintendent			
Number of similar projects in other positions			
Current Project Assignments			
Name of assignment		Percent of time used for this project	Estimated project completion date
Reference Contact Information (listing names indicates approval to contact named individuals as a reference)			
Name		Name	
Title/Position		Title/Position	
Organization		Organization	
Telephone		Telephone	
Email		Email	
Project		Project	
Candidate's role on project		Candidate's role on project	

Copyright© 2018 National Society of Professional Engineers, American Council of Engineering Companies, and American Society of Civil Engineers. All rights reserved.

NON-COLLUSION AFFIDAVIT OF PRIME BIDDER

State of _____)

County of _____) ss.

_____, being first duly sworn, deposes and says that:

1. He is _____of_____ the Bidder that has submitted the attached Bid;

2. By submission of the bid, each bidder certifies, and in the case of a joint bid each party thereto certifies as to his own organization, that in connection with the bid:
   (i) The prices in the bid have been arrived at independently, without consultation, communication, or agreement, for the purpose of restricting competition, as to any matter relating to such prices with any other bidder or with any competitor;
   (ii) Unless otherwise required by law, the prices which have been quoted in the bid have not knowingly been disclosed by the bidder, prior to opening, directly or indirectly to any other bidder or to any competitor; and
   (iii) No attempt has been made or will be made by the bidder to induce any other person or firm to submit or not to submit a bid for the purpose of restricting competition.
3. Each person signing the bid shall certify that:
   (i) He is the person in the bidder's organization responsible within that organization for the decision as to the prices being bid and that he has not participated, and will not participate, in any action contrary to (I) (i) through (I)(iii) above; or
   (ii) He is not the person in the bidder's organization responsible within that organization for the decision as to the prices being bid but that he has been authorized to act as agent for the persons responsible for such decision in certifying that such persons have not participated, and will not participate, in any action contrary to (I)(i) through (I)(iii) above, and as their agent shall so certify; and shall also certify that he has not participated, and will not participate, in any action contrary to (I)(i) through (I)(iii) above.

(Signed)_____

_____
(Name & Title)

Subscribed and sworn to before me this

_____ day of _____, 20___.

_____

_____
(Notary Public)

My Commission Expires:_____

Intentionally Blank

NOTICE OF INTENT TO AWARD

To:

Project Description:

The OWNER has considered the BID submitted by you for the above described WORK, in response to its Advertisement for Bids, dated _____ and Information for Bidders.

You are hereby notified that your BID will be accepted, contingent upon Illinois Environmental Protection Agency (Illinois EPA) approval, for items in the amount of _____.

You will be required by the Information for Bidders to execute the Agreement and furnish the required CONTRACTOR'S Performance BOND, Payment BOND and certificates of insurance within ten (10) calendar days from the date of the final Notice to be sent upon Illinois EPA approval, to you.

Dated this day of _____

_____
(OWNER)

By: _____

Title: _____

Intentionally Blank

NOTICE OF AWARD

Date of Issuance:			
Owner:	Illinois Alluvial Regional Water Company, Inc.	Owner's Project No.:	
Engineer:	MECO-Heneghan Engineers, LLC	Engineer's Project No.:	71000-412
Project:	Phase 1b		
Contract Name:	Contract F		
Bidder:			
Bidder's Address:			

You are notified that Owner has accepted your Bid dated **[date]** for the above Contract, and that you are the Successful Bidder and are awarded a Contract for:

> **Phase 1b – To construct approximately 30,000lf of finished water transmission main and appurtenances.**

The Contract Price of the awarded Contract is $_____. Contract Price is subject to adjustment based on the provisions of the Contract, including but not limited to those governing changes, Unit Price Work, and Work performed on a cost-plus-fee basis, as applicable.

Five (5) unexecuted counterparts of the Agreement accompany this Notice of Award, and one copy of the Contract Documents accompanies this Notice of Award, or has been transmitted or made available to Bidder electronically.

☐ Drawings will be delivered separately from the other Contract Documents.

You must comply with the following conditions precedent within 15 days of the date of receipt of this Notice of Award:

1. Deliver to Owner **five (5)** counterparts of the Agreement, signed by Bidder (as Contractor).
2. Deliver with the signed Agreement(s) the Contract security (such as required performance and payment bonds) and insurance documentation, as specified in the Instructions to Bidders and in the General Conditions, Articles 2 and 6.
3. Other conditions precedent (if any): **[Describe other conditions that require Successful Bidder's compliance]**

Failure to comply with these conditions within the time specified will entitle Owner to consider you in default, annul this Notice of Award, and declare your Bid security forfeited.

Within 10 days after you comply with the above conditions, Owner will return to you one fully signed counterpart of the Agreement, together with any additional copies of the Contract Documents as indicated in Paragraph 2.02 of the General Conditions.

Owner:	**Illinois Alluvial Regional Water Company, Inc.**
By *(signature)*:	_____
Name *(printed)*:	Allen Davenport
Title:	Board President

Copy: Engineer

Copyright© 2018 National Society of Professional Engineers, American Council of Engineering Companies, and American Society of Civil Engineers. All rights reserved.

Intentionally Blank

ILLINOIS ENVIRONMENTAL PROTECTION AGENCY
CERTIFICATION OF NONSEGREGATED FACILITIES

(Applicable to state assisted construction contracts and related subcontracts exceeding $10,000.)

The state assisted construction contractor certifies that he or she does not maintain or provide for their employees any segregated facilities at any of their establishments, and that they do not permit their employees to perform their services at any location, under their control, where segregated facilities are maintained. The state assisted construction contractor certifies further that they will not maintain or provide for their employees any segregated facilities at any of their establishments, and that they will not permit their employees to perform their services at any location, under their control, where segregated facilities are maintained. The state assisted construction contractor agrees that a breach of this certification is a violation of 44 Ill. Admin. Code 750, Appendix A – Equal Employment Opportunity Clause; 35 Ill. Admin. Code 360.304 – Equal Opportunity (for state assisted construction grants); and Illinois Procurement Code (30 ILCS 500), which incorporates IDHR nondiscrimination obligations.

As used in this certification, the term "segregated facilities" means any waiting rooms, work areas, rest rooms and other storage or dressing areas, parking lots, drinking fountains, recreation or entertainment areas, transportation, and housing facilities provided for employees which are segregated by explicit directive or are in fact segregated based on race, creed, color, or national origin, because of habit, local custom or otherwise. The state assisted construction contractor agrees that (except where they have obtained identical certifications from proposed subcontractors for specific time periods) they will obtain identical certifications from proposed subcontractors prior to the award of subcontracts exceeding $10,000 which are not exempt from the provisions indicated above and that they will retain such certification in their files.

_____ _____

Signature **Date**

_____

Name and Title of Signatory (Please type)

_____

Firm Name (Please type)

Intentionally Blank

NOTICE TO LABOR UNIONS OR OTHER ORGANIZATIONS OF WORKERS NONDISCRIMINATION IN EMPLOYMENT

To: _____
(Name of union or organization of workers)

The undersigned currently holds contract(s) with _____
(Name of applicant)
involving funds or credit of the Illinois State or (a) subcontract(s) with a prime contractor holding such contract(s).

You are advised that under the provisions of the above contracts(s) or subcontract(s) and in accordance with Illinois Human Rights Act (IHRA), the Illinois Procurement Code, Illinois Business Enterprise Program (BEP), the undersigned is obliged not to discriminate against any employee or applicant for employment because of race, color, creed or national origin. This obligation not to discriminate in employment includes, but is not limited to, the following:

HIRING, PLACEMENT, UPGRADING, TRANSFER OR DEMOTION, RECRUITMENT, ADVERTISING, OR SOLICITATION FOR EMPLOYMENT, TRAINING DURING EMPLOYMENT, RATES OF PAY OR OTHER FORMS OF COMPENSATION, SELECTION FOR TRAINING INCLUDING APPRENTICESHIP, LAYOFF OR TERMINATION.

Copies of this notice will be posted by the undersigned in conspicuous places available to employees or applicants for employment.

Name of Organization: _____

Signature: _____

Name & Title of Signatory: _____

Date: _____

Intentionally Blank

Project Number

ILLINOIS ENVIRONMENTAL PROTECTION AGENCY
SPRINGFIELD, ILLINOIS

CERTIFICATION REGARDING DEBARMENT, SUSPENSION, AND OTHER RESPONSIBILITY MATTERS

In accordance with federal Executive Order 12549, the prospective participant to the best of its knowledge and belief that it and its principles:

(a) Are not presently debarred, suspended, proposed for debarment, declared ineligible, or voluntarily excluded from covered transactions by any State department or agency;

(b) Have not within a three year period preceding this proposal been convicted of or had a civil judgment rendered against them for commission of fraud or a criminal offense in connection with obtaining, attempting to obtain, or performing a public (Federal, State or local) transaction or contract under a public transaction; violation of State antitrust statutes or commission of embezzlement, theft, forgery, bribery, falsification or destruction of records, making false statements, or receiving stolen property.

(c) Are not presently indicted for or otherwise criminally or civilly charged by a government entity (Federal, State or local) with commission of any of the offenses enumerated in paragraph (1) (b) of this certification; and

(d) Have not within a three-year period preceding this application/proposal had one or more public transactions (Federal, State, or local) terminated for cause or default.

I understand that a false statement on this certification may be grounds for rejection of this proposal or termination of the award.

_____

(Typed Name & Title of Authorized Representative)

_____ _____

(Signature of Authorized Representative) **(Date)**

☐ I am unable to certify the above statements. My explanation is attached.

Intentionally Blank

CONSTRUCTION CONTRACTS OF LOAN RECIPIENT AND OTHER SECTIONS FROM "PROCEDURES FOR ISSUING LOANS FROM THE PUBLIC WATER SUPPLY LOAN PROGRAM"

SECTION 662.420(b)(2) CHANGE ORDERS

A) When the loan recipient authorizes the contractor to add, delete, or revise the work within the general scope of the contract documents, or authorizes an adjustment in the contract price or contract time, the loan recipient shall submit a change order to the Agency.

B) For each change order, the loan recipient shall submit to the Agency for approval the following documentation:

   i) one copy of the fully executed change order signed by the loan recipient, construction engineer, and the contractor; and

   ii) a description of any changes, with justification for the changes.

C) Prior approval by the Agency of a change order is required when a change order results in:

   i) alterations in design scope that require a modification to a construction permit; or

   ii) an increase in the amount of loan funds needed to complete the project.

D) Failure to give timely notice of proposed project changes or action by the loan recipient that is not consistent with the Agency's determination on those changes may result in disallowance of loan participation for costs incurred that are attributable to the change.

SECTION 662.620(f) REQUIRED CONSTRUCTION CONTRACT PROVISIONS

Each construction contract shall include the following provisions:

1) Audit; access to records:

   A) The contractor shall maintain books, records, documents, and other evidence directly pertinent to performance on loan work in accordance with Generally Accepted Accounting Principles (GAAP). The contractor shall also maintain the financial information and data used by the contractor in the preparation or support of any cost submissions required under Section 662.420 (b)(2) of the loan rules and a copy of the cost summary submitted to the owner. The Illinois Auditor General, the owner, the Agency, or any of their authorized representatives shall have access to the books, records, papers, documents, and other evidence for purposes of inspection, audit, examination, excerpts, transcriptions, and copying. The contractor shall provide facilities for access and inspection.

   B) For a formally advertised, competitively awarded, fixed price contract, the contractor shall include access to records as required by subsection (a)(1)(A) for all negotiated change orders and contract amendments in excess of $25,000 that affect the contract price. In the case of all other prime contracts, the contractor shall agree to include access to records required by subsection (a)(1)(A) in all contracts and all tier subcontracts or change orders in excess of $25,000 that are directly related to project performance.

   C) Audits shall be in accordance with auditing standards generally accepted in the United States.

   D) The contractor shall agree to the disclosure of all information and reports resulting from access to records required by subsection (a)(1)(A). When the audit concerns the contractor, the auditing agency shall afford the contractor an opportunity for an audit exit conference and an opportunity to comment on the pertinent portions of the draft audit report. The final audit report shall include the written comments, if any, of the audited parties.

E) The records required by subsection (a)(1)(A) shall be maintained and made available during performance of the work under the loan agreement and for 3 years after the date of the final loan audit. In addition, records that relate to any dispute or litigation or the settlement of claims arising out of any performance, costs or items to which an audit exception has been taken, shall be maintained and made available for 3 years after resolution of the dispute, appeal, litigation, claim or exception.

F) The right of access will generally be exercised with respect to financial records under:

i) Negotiated prime contracts;

ii) Negotiated change orders or contract amendments in excess of $25,000 affecting the price of any formally advertised, competitively awarded, fixed price contract; and

iii) Subcontracts or purchase orders under any contract other than a formally advertised, competitively awarded, fixed price contract.

G) The right of access will generally not be exercised with respect to a prime contract, subcontract, or purchase order awarded after effective price competition. In any event, the right of access shall be exercised under any type of contract or subcontract:

i) With respect to records pertaining directly to contract performance, excluding any financial records of the contractor; and

ii) If there is any indication that fraud, gross abuse, or corrupt practices may be involved in the award or performance of the contract or subcontract.

2) Covenant against contingent fees.

The contractor shall warrant that no person or selling agency has been employed or retained to solicit or secure the contract upon an agreement or understanding for a commission, percentage, brokerage, or contingent fee. For breach or violation of this warranty, the owner shall have the right to annul the contract without liability or in its discretion to deduct from the contract price or consideration, or otherwise recover, the full amount of such commission, percentage, brokerage, or contingent fee.

3) Wage provisions.

The Contractor shall pay prevailing wages in accordance with the Davis-Bacon Act (40 USC 3141 through 3148) as defined by the U.S. Department of Labor.

4) Disadvantaged business enterprise requirements.

The contractor shall provide evidence that the contractor has taken affirmative steps in accordance with 40 CFR 33 to assure that disadvantaged business enterprises are used when possible as sources of supplies, equipment, construction, and services, consistent with the provisions of the Agency's Operating Agreement with USEPA.

5) Debarment and suspension provisions.

The contract shall require the successful bidders to submit a Certificate Regarding Debarment, Suspension and Other Responsibility Matters Form showing compliance with federal Executive Order 12549.

6) Nonsegregated facilities provisions

The contractor shall be required to submit a Certification of Nonsegregated Facilities on forms provided by the Agency.

7) Build America Buy America

   If applicable, the contractor shall be required to comply with the requirements of the BABA Act.

8) American Iron and Steel

   The contractor shall be required to use American Iron and Steel, if required by USEPA for that fiscal year.

9) A clause that provides:

   "No contractor or subcontractor shall discriminate on the basis of race, color, national origin or sex in the performance of this contract. The contractor or subcontractor shall carry out applicable requirements of 40 CFR 33 in the award and administration of contracts awarded under the PWSLP. Failure by the contractor or subcontractor to carry out these requirements is a material breach of this contract which may result in the termination of this contract or other legally available remedies."

SECTION 662.620(g) SUBCONTRACTS UNDER CONSTRUCTION CONTRACTS

The award or execution of all subcontracts by a prime contractor and the procurement and negotiation procedures used by the prime contractor shall comply with:

1) All applicable provisions of federal, State and local law;

2) All provisions of this Part 662 regarding fraud and other unlawful or corrupt practices;

3) All provisions of this Part 662 with respect to access to facilities, records and audit of records; and

4) All provisions of subsection 662.620(f)(5) that require a Certification Regarding Debarment, Suspension, and Other Responsibility Matters.

SECTION 662.620(h) CONTRACTOR BANKRUPTCY

In the event of a contractor bankruptcy, the loan recipient shall notify the Agency and shall keep the Agency advised of any negotiations with the bonding company, including any proposed settlement. The Agency may participate in those negotiations and will advise the loan recipient of the impact of any proposed settlement to the loan agreement. The loan recipient shall be responsible for assuring that every appropriate procedure and incidental legal requirement is observed in advertising for bids and re-awarding a construction contract.

SECTION 662.620(i) ACCESS

Every contract entered by the loan recipient for construction work, and every subagreement, shall provide the Agency representatives with access to the work. The contractor or subcontractor shall provide facilities for such access and inspection.

SECTION 662.640(c) REMEDIES

All claims, counter-claims, disputes and other matters in question between the recipient and the contractor arising out of, or relating to, a subagreement or its breach shall be decided by arbitration if the parties agree, or in a court of competent jurisdiction within the State.

Intentionally Blank

BIDDER CERTIFICATION

In Compliance with Article 33E-11 to the

"Criminal Code of 2012"

I _____ , do hereby certify that:
(Name)

1. I am _____ of the _____
(Position) (Firm)
and have authority to execute this certification on behalf of the firm
2. This firm is not barred from bidding on this contract due to a either a Bid-rigging or Bid Rotating violation as set forth in Article 33E-11 to the "Illinois Criminal Code of 2012 [720 ILCS 5/33E-11]."

Name of Firm: _____

Signature: _____

Title: _____

Date: _____

Corporate Seal (where appropriate)

On this _____ day of _____ 20 _____ , before me appeared
(Day Number) (Month) (Year)

_____ to me personally known, who,
(Name)

being duly sworn, did execute the foregoing affidavit, and did state that he or she was properly authorized by

_____ to execute the affidavit and did so as
(Name of Firm)

his or her free act and deed.

Notary Public: _____ **Commission Expires:** _____

Notary Seal:

Intentionally Blank

SPECIFICATIONS FOR DISADVANTAGED BUSINESS ENTERPRISE PARTICIPATION

NAME OF LOAN RECIPIENT: _____

1) DISADVANTAGED BUSINESS ENTERPRISE POLICY

A) It is the policy of the State of Illinois to award a fair share of sub-agreements to disadvantaged businesses (DBEs). In complying with this requirement, contractors are required to take affirmative steps to assure that disadvantaged businesses are used when possible as sources of supplies, equipment, construction, and services as explained herein.

B) These specifications define the terms, conditions, and requirements of the State Revolving Fund Loan Program, and the (Name of Loan Recipient) _____'s policy and procedures for complying with these requirements.

C) As required by the award conditions of USEPA's Assistance Agreement with Illinois EPA, the fair share percentages are 5% for MBEs and 12% for WBEs.

2) PRE-CONTRACT AWARD OBLIGATIONS

A) All bidders are required to advertise subcontracting opportunities and to negotiate with disadvantaged businesses prior to bid opening. Failure to document such affirmative efforts shall be deemed, relative to disadvantaged business compliance, non-responsive.

B) To establish a bid as responsible, the bidder will be required to document the proposed utilization of disadvantaged businesses with letters of intent signed by the bidder and by the disadvantaged business listed in the bid. The documentation requirements are outlined in Section III of this document.

C) (Name of Loan Recipient) _____'s disadvantaged business policy clearly intends for bidders to contact and encourage the participation of disadvantaged businesses prior to bid opening. Affirmative efforts (the written record of conscientious and honest communications between the bidder and disadvantaged business) must be initiated and completed by the bidder prior to bid opening. All bidders must document compliance with the requirements of the disadvantaged business policy.

3) EVALUATION OF DISADVANTAGED BUSINESS UTILIZATION AND AFFIRMATION EFFORTS

A) As a prerequisite to demonstrate compliance with the (Name of Loan Recipient) _____'s disadvantaged business policy, ALL bidders shall provide the following with its bid:

i) Completed and signed certification from the bidder(s), attesting that the bidder will award no sub-agreements, including the procurement of equipment, materials, supplies and services, in the performance of this contract.

OR

ii) "Certification of publication," or adequate proof of publication, including an actual copy of the newspaper advertisement from a daily newspaper**. The advertisement must run one day at least (16) days prior to bid opening.** An example advertisement follows this section.

Bidders may publish the advertisement in an established, online bidder's clearinghouse such as the "Dodge Report (http://construction.com/dodge/)". If an online advertisement is placed with the "Dodge Report" or an equivalent website, a screenshot of the advertisement along with the webpage address, and a payment receipt is required as documentation. **The advertisement must run one day at least (16) days prior to bid opening.**

iii) List of all disadvantaged business enterprise (DBE) and non-DBE's that submitted proposals to the bidder along with the date of the proposal. Names, addresses, phone number and/or e-mail are required.

iv) List of disadvantaged businesses not being utilized and justification for non-utilization.

v) If DBE subcontractors will be utilized for the project, a completed and signed copy of Illinois EPA DBE Form No. 3 (DBE Subcontractor Utilization Form) or an equivalent "Notice of Intent" is needed from each subcontractor.

vi) If DBE subcontractors will be utilized for the project, a completed and signed certification from the bidder(s), attesting that the bidder has no controlling or dominating interest or conflict of interest with the disadvantaged business that will be utilized.

vii) In instances where the bidder(s) does not receive any proposals from disadvantaged businesses prior to bid opening, the bidder(s) must provide a written certification attesting that no proposals were received.

Failure to submit the documentation pursuant to the requirements of A (i-vii) above may cause rejection of the bid as non-responsive**.**

4) SANCTIONS

A) The (Name of Loan Recipient) _____ has the option to reject one or all bids when the information submitted by the bidder(s) fails to demonstrate compliance with the disadvantaged business requirements (i.e., the bidder fails to place their pre-bid advertisement in a daily newspaper, or approved website, at least 16 days prior to bid opening).

B) Upon finding that any Party has not complied with the requirements of these specifications, <u>including misrepresenting a firm as a disadvantaged business</u>, any one or a combination of the following actions may be taken.

i) Declare the bidder and/or subcontractor non-responsible and therefore, ineligible for contract award.

ii) Disallow all contract costs associated with non-compliance.

iii) Refer matters which may be fraudulent to the Illinois Attorney General.

5) POST-CONTRACT AWARD COMPLIANCE

A) As required by the award conditions of USEPA's Assistance Agreement with Illinois EPA, all sub-agreements of the prime contractor must identify that the fair share percentages are 5% for MBEs and 12 % for WBEs.

B) After award of the prime contract, copies of all disadvantaged business-related sub-agreements between the prime contractor and subcontractors shall be submitted to the owner.

C) After bid submission, any changes in previously reported disadvantaged businesses utilization shall be handled in accordance with 40 CFR Part 33.302(b-h). If the contractor fails to initiate such actions, the owner may withhold payments and/or institute other appropriate sanctions.

SUGGESTED DISADVANTAGED BUSINESS (DBE) ADVERTISEMENT FOR CONSTRUCTION CONTRACTORS

NOTICE TO DISADVANTAGED BUSINESSES

_____ , _____ , _____ , is
(Name of Company) (Address of Company) (Phone Number)

seeking disadvantaged businesses for the _____
(Name of Loan Recipient)

Project for subcontracting opportunities in the following areas: _____

_____

_____

_____

All disadvantaged businesses should contact, IN WRITING, (certified letter, return receipt requested),

_____ to discuss the subcontracting opportunities.
(Company Contact Person)

All negotiations must be completed prior to bid opening _____
(Date of Bid Opening)

*The advertisement must clearly state the method of evaluating the proposals or quotations, and the relative importance attached to each criterion. Bidders must uniformly and objectively evaluate the proposals submitted by disadvantaged business in response to the advertisement based upon the evaluation criteria stated in the advertisement. The evaluation criteria must not be restrictive or exclusionary.

SUMMARY REPORT OF DISADVANTAGED BUSINESS ENTERPRISE REQUIREMENTS FOR CONTRACTORS

1) Completed and signed certification from bidder(s), attesting that the bidder will award no sub-agreements, including the procurement of equipment, materials, supplies and services in the performance of this contract (may use Illinois EPA DBE Form #1).

OR

"Certificate of publication, or adequate evidence of proof of publication, including an actual copy of the newspaper advertisement from a daily publication. For advertisements placed in a construction project clearinghouse such as www.construction.com, a screenshot of the advertisement, link to website, and receipt is required for proof of advertising.

2) List of all disadvantaged business enterprises (DBE) and non-DBE's that submitted proposals to the bidder/prime contractor. Specify as DBE or non-DBE, type of DBE, and the other information listed below (DBE Form #4 may be used for this purpose).

   Name of Company
   Name of Owners
   Address of Company
   E-mail Address of Company
   Telephone Number
   Date of Proposal
   Type of Business
   Type of DBE
   Description of work to be performed

3) List of disadvantaged businesses that submitted proposals to the bidder but will not be utilized. Justification for non-utilization must be provided (may use Illinois EPA DBE Form #1).

4) Completed and signed copies Illinois EPA DBE Form #3 (Subcontractor Utilization Form) or equivalent "Notice of Intent". Only applies if using DBE subcontractors.

5) Completed and signed certification from bidder(s) attesting that the bidder has no dominating or conflict of interest with the disadvantaged business to be utilized (Illinois EPA DBE Form #1). Only applies if using DBE subcontractors.

6) In instances where the bidder(s) does not receive any proposals from disadvantaged businesses prior to bid opening, the bidder(s) must provide a written certification attesting that no proposals were received (Illinois EPA DBE Form #1).

7) **Note:** DBE Form #2 is **not** included in this packet. It is for consultants/engineers to report DBE activity. This form may be found in Illinois EPA's DBE Guidance Manual which is available on the Agency's website or mailed upon request by calling 217-782-2027.

Illinois EPA Disadvantaged Business Enterprise (DBE) Program Form #1
Contractor Certification Form

(To be completed by all Prime Contractors)

Please check the appropriate boxes that apply and complete the information on the bottom ofthe form.

- ☐ This firm will award no subcontracts (including in the procurement of equipment,supplies, or services), in the performance of this contract.

- ☐ This firm advertised for DBE subcontractors according to the good faith efforts outlinedin the Illinois EPA DBE Guidance Document.

- ☐ This firm received proposals from DBE(s) that will not be utilized. A list of the DBEs nothired, along with their address, phone number, and reason(s) for non-utilization, is below.

- ☐ This firm did not receive any inquiries from DBEs.

I certify that the above is true. I further certify that this firm and its partners, directors, and officers do not possess a controlling interest in ownership or conflict of interest or any other authority to control the DBE to be used during the performance of the contracts.

BY: _____

NAME: _____

TITLE: _____

COMPANY: _____

DATE: _____

Illinois EPA Disadvantaged Business Enterprise (DBE) Program Form #3

Subcontractor Utilization Form

(Only complete this form if DBE subcontractors or sub-consultants will be working on a project)

This form is intended to capture the DBE subcontractor's description of work to be performed and the price of the work submitted to the prime contractor. All subcontractors must completethis form, and it must be included in the prime contractor's bid package.

Subcontractor Name	Project Name
Contact Person's Name & Title	
Address	
Telephone	Email
DBE Certified By:	Select all that apply. At least one is required: **MBE** **WBE** **SBE** **DBE**
Prime Contractor Name	

Type of Work to be Performed	Cost Estimate of Work

I certify under penalty of perjury that the forgoing statements are true and correct. Signing thisform does not signify a commitment to using the subcontractors above. I am aware that in the event of a replacement of a subcontractor, I will adhere to the replacement requirements set forth in 40 C.F.R. Part 33 Section 33.302(c).

Prime Contractor Signature:	**Print Name:**
Date:	**Title:**
Subcontractor Signature:	**Print Name:**
Date:	**Title:**

Illinois EPA Disadvantaged Business Enterprise (DBE) Program Form #4, Bidders List

(Only complete this form if subcontractors or sub-consultants will be working on a project)

Using this form/format is optional. Other formats are acceptable.

Company Name & Contact Person	Address	Phone No. w/ area code	Email	Proposed Work (supplies, paint, etc.)	DBE Status (MBE, WBE, DBE, SBE)
					Check if Hired ☐
					Check if Hired ☐
					Check if Hired ☐
					Check if Hired ☐

Intentionally Blank

BIDDER CERTIFICATION REGARDING THE USE OF IRON, STEEL, MANUFACTURED PRODUCTS, AND CONSTRUCTION MATERIALS PRODUCED IN THE UNITED STATES

(BUILD AMERICA, BUY AMERICA ACT)

I _____ , do hereby certify that:
(Name)

1. I am _____ (title) of the _____ (company, partnership, etc.) and have authority to execute this certification on behalf of the firm.
2. I am aware that all iron, steel, manufactured products, and construction materials used for this project must be produced in the United States per the federal Build America, Buy America Act (BABA) signed by President Biden on November 15, 2021. Pub. L No. 117-58, §§ 70901-52.
3. I understand the term "iron and steel products" refers to the following products made primarily of iron or steel: lined or unlined pipes and fittings manhole covers and other municipal castings, hydrants, tanks, flanges, pipe clamps and restraints, valves, structural steel, reinforced precast concrete, and construction materials.
4. I understand that all manufactured products used in the project must be produced in the United States. This means the manufactured product was manufactured in the United States, and the cost of the components of the manufactured product that are mined, produced, or manufactured in the United States is greater than 55 percent of the total cost of all components of the manufactured product.
5. I acknowledge that all construction materials for this project must be manufactured in the United States. This means all manufacturing processes for the construction materials occurred in the United States.
6. I am aware that this requirement applies to all portions of the project that are subcontracted.

Name of Company: _____

Signature: _____

Title: _____

Date: _____

Corporate Seal (where appropriate)

REQUIREMENTS SPECIFIC TO BUY AMERICA, BUILD AMERICA ACT (BABA)

On November 15, 2021, President Biden signed into law the Infrastructure Investment and Jobs Act ("IIJA"), Pub. L. No. 117-58, which includes the Build America, Buy America Act ("BABA"). The purpose of BABA is to ensure that federally funded infrastructure projects only utilize iron, steel, manufactured products, and construction materials produced in the United States. The requirement to use products produced in the United States applies to all projects for the construction, alteration, maintenance, or repair of publicly owned treatment works (POTW) or public water systems. Since Illinois' Clean Water State Revolving Fund (CWSRF) and Drinking Water State Revolving Fund (DWSRF) utilize federal funds, loan recipients must use iron, steel, manufactured products, and construction materials that are produced in the United States. Guidance is available on USEPA's website: https://www.epa.gov/cwsrf/build-america-buy-america-baba. Waivers from the requirements are available under certain circumstances. BABA requires the following:

1. All iron and steel used in the project are produced in the United States. This means all manufacturing processes, from the initial melting stage through the application of coatings, occurred in the United States.
2. All manufactured products used in the project are produced in the United States. This means the manufactured product was manufactured in the United States, and the cost of the components of the manufactured product that are mined, produced, or manufactured in the United States is greater than 55 percent of the total cost of all components of the manufactured product, unless another standard for determining the minimum amount of domestic content of the manufactured product has been established under applicable law or regulation.
3. All construction materials are manufactured in the United States. This means that all manufacturing processes for the construction material occurred in the United States.

BABA only applies to items that are consumed in, incorporated into, or affixed to an infrastructure project. It does not apply to tools, equipment, and supplies, such as temporary scaffolding, brought to the construction site and removed at project completion. BABA does not apply to equipment and furnishings, such as movable chairs, desks, and portable computer equipment, that are used at or within the finished infrastructure project but are not an integral part of or permanently affixed to the structure. BABA requirements apply to an entire infrastructure project, even if it is funded by both Federal and non-Federal funds under one or more awards.

CONSTRUCTION MATERIALS includes an article, material, or supply that consists primarily of:

- non-ferrous metals;
- plastic and polymer-based products including polyvinylchloride, composite building materials, and polymers used in fiber optic cables;
- glass including optic glass;
- lumber; or
- drywall.

CONSTRUCTION MATERIALS does NOT include items made primarily of iron or steel; manufactured products; cement and cementitious materials; aggregates such as stone, sand, or gravel; or aggregate binding agents or additives.

REQUIREMENTS SPECIFIC TO IRON AND STEEL

The existing American Iron and Steel (AIS) Requirements will continue as part of BABA. An iron or steel product is one of the items listed below and is made primarily of iron or steel that is permanently incorporated into the public water system or treatment works.

- Pipes (lined or unlined) and pipe fittings
- Pipe clamps and restraints
- Valves
- Structural steel
- Hydrants
- Flanges
- Tanks
- Reinforced precast concrete
- Manhole Covers and other municipal castings such as valves boxes, drainage grates, bollards, etc.
- Construction materials such as trusses, wire, grating, wire, ductwork, fence tubing, wall panels, etc.

For one of the listed iron or steel products to be considered subject to the BABA requirements, it must be made of greater that 50% iron or steel, measured by the material costs. "Steel" means an alloy that includes at least 50 percent iron, between .02 and 2 percent carbon, and may include other elements. Metallic elements such as chromium, nickel, molybdenum, manganese, and silicon may be added during the melting of steel for the purpose of enhancing properties such as corrosion resistance, hardness, or strength. The definition of steel covers carbon steel, alloy steel, stainless steel, tool steel and other specialty steels. AIS Guidance is available at: https://epa.illinois.gov/topics/grants-loans/state-revolving-fund/american-iron-and-steel/american-iron-and-steel-requirements.html.

RECORDKEEPING AND DOCUMENTING THE COUNTRY OF ORIGIN FOR IRON, STEEL, MANUFACTURED PRODUCTS, & CONSTRUCTION MATERIALS USED IN LOAN FUNDED PROJECTS

Loan recipients with assistance from their general contractor must be able to verify that products used in their projects comply with the BABA requirements. USEPA recommends loan recipients use a "Step Certification" process to ensure that producers adhere to the BABA requirements. Step certification is a process under which each handler (supplier, fabricator, manufacturer, etc.) of the iron, steel, manufactured products, or construction materials certifies that their step in the process was domestically performed. Each time a step in the manufacturing process takes place, the manufacturer delivers its work along with a certification of its origin.

A certification can be quite simple if it includes the name of the manufacturer, the location of the manufacturing facility (not company headquarters), a description of the product or item being delivered, and a signature by a manufacturer's responsible party. Certification could be achieved by other methods such as requiring the final manufacturer, who delivers the products to the worksite, to provide certification that all manufacturing processes occurred in the US. While this type of certification is easier and acceptable, it may not provide the same degree of assurance and additional documentation may be needed. USEPA auditors recommend keeping records of when and where the products were delivered. Records from the manufacturer should refer to specific items such as pipes, valves, meters. Try to avoid records containing broad statements such as, "All products delivered were USA made".

Regardless of the method, documents regarding the country of origin for all covered items should be collected and maintained by the loan recipients. Having a good paper trail is invaluable during an inspection or audit.

SAMPLE CERTIFICATION LETTER

Below is a sample step certification letter for BABA compliance. The completed letter is provided to the construction contractor or loan applicant by the supplier, fabricator, manufacturer, etc. of covered products. Documentation must be provided on company letterhead.

Company Letterhead

Date

Company Name
Company Address
City, State, Zip

Subject: Build America, Buy America Act Step Certification for Project (Identify Project Here xxx)

I, (company representative), certify that the (melting, bending, coating, galvanizing, cutting, etc.) process for (manufacturing or fabricating) the following products and/or materials shipped or provided for the subject project are in full compliance with the federal Build America, Buy America Act requirements as required in EPA's State Revolving Fund Programs.

Item, Products, and/or Materials:

1. XXX
2. XXX
3. XXX

Such process took place at the following location (City and State must be included):

If any of the above compliance statements change while providing material to the project we will immediately notify the prime contractor and the engineer.

Signed by Company Representative

ILLINOIS WORKS JOBS PROGRAM ACT – APPRENTICESHIP INITIATIVE INFORMATION FOR CONTRACTORS

Summary: The Illinois Works Jobs Program Act, 30 ILCS 559/Art. 20, is a statewide initiative to ensure that all Illinois residents have access to State capital projects and careers in the construction industry and building trades and to provide contracting and employment opportunities to historically underrepresented populations in the construction industry. This will be accomplished through three programs created by the Illinois Works Jobs Program Act: the Illinois Works Apprenticeship Initiative, the Illinois Works Pre-Apprenticeship Program, and the Illinois Works Bid Credit Program. Additional information is available at the following website: https://dceo.illinois.gov/illinoisworks.html.

The goal of the Illinois Works Apprenticeship Initiative ("10% apprenticeship goal") is that for projects estimated to cost $500,000 or more, apprentices will perform either 10% of the total labor hours actually worked in each prevailing wage classification or 10% of the estimated labor hours in each prevailing wage classification, whichever is less. The 10% apprenticeship goal applies to projects being paid for in whole or in part by appropriated capital funds to construct a public work either through a contract or grant issued by a State agency. A determination was made that this requirement also applies to Illinois EPA loans. The $500,000 threshold applies to the total project cost and NOT the total cost or value of an individual construction contract.

In July 2023, Governor Pritzker signed into law a new legislated goal that will increase opportunities for graduates, strengthen the pipeline for the program, and more seamlessly integrate the pre-apprenticeship programs into existing apprenticeship goals. The new legislative updates require that (5%), half of the (10%) goal of the apprenticeship hours for each classification must be performed by apprentices who graduated from the Illinois Works Pre-apprenticeship, Climate Works Pre-apprenticeship, or IDOT Highway Construction Careers programs.

Certification: Apprentices are required to be U.S. Dept. of Labor certified (not limited to pre-apprentice program graduates).

APPLICABILITY

If a project is estimated to received $500,000 or more of State Capital Funding for the Project:

If the state's contribution to the project amount equals 50% or more of the cost for the project, the 10% apprenticeship requirement applies to all prevailing wage eligible work performed by contractors on the public works project.

If the state's contribution to the project is less than 50% of the cost for the project, the 10% apprenticeship requirement applies only to prevailing wage eligible work being funded from state funds.

The Project has less than $500,000 of State Capital Funding, but the Total Estimated Project Cost is $500,000 or more:

If the state's contribution to the project amount equals 50% or more of the estimated cost for the project, the 10% apprenticeship requirement applies to all prevailing wage eligible work performed by contractors on the public works project.

If the state's contribution to the project is less than 50% of the estimated cost for the project, the 10% apprenticeship requirement does not apply.

Total Estimated Project Cost is less than $500,000: The 10% apprenticeship requirement does not apply. The $500,000 threshold applies to the total project cost and NOT the total cost or value of an individual construction contract.

Waivers from the Requirements: If goals cannot be met, the state has discretion to grant waivers, reductions or to hold public hearings on the issue. Factors to be considered include the scale of the project and whether the contractor or subcontractor seeking the action has previously requested reductions or waivers. A waiver form is available on the Illinois EPA website at: https://epa.illinois.gov/topics/grants-loans/state-revolving-fund/drinking-water-loans.html or https://dceo.illinois.gov/illinoisworks/apprenticeship.html.

Reporting: An example quarterly reporting form is attached. A fillable version is available on the Illinois EPA website. Contractors should coordinate with the loan applicant and their consultant for further instructions regarding these forms. Loan applicants are ultimately responsible for reporting quarterly labor hours to the state, but coordination with their contractor is essential. All loan funded projects are subject to payment of Davis Bacon wages.

For general apprenticeship questions, please contact the Illinois Works Office at: CEO.ILWorks@Illinois.gov.

ILLINOIS WORKS APPRENTICESHIP INITIATIVE
PERIODIC REPORT

Organization Name:		FEIN Number:		DUNS/Unique Entity ID Number:	
Grant/Loan Awarding Agency:		Construction Start Date:		Construction End Date:	
Grant/Loan Number:		Project Number:		Estimated Total State Contribution: (including all appropriated funds)	
Estimated Total Project Costs:					

REPORTING PERIOD:

Period Start Date: _____ Period End Date: _____

APPLICABLE APPRENTICESHIP GOAL (SELECT ALL THAT APPLY):

☐ 10% Total Project Cost ☐ 10% Total State Contribution Only

☐ Waiver Approved by IL DCEO IL DCEO Waiver Approval Date: _____

(If a waiver was granted for any prevailing wage classification, the Grantee does not need to report on those classifications on this form.)

☐ Reduction Approved by IL DCEO IL DCEO Reduction Approval Date: _____

(If selected, enter the applicable prevailing wage classification(s) and approved reduced percentage(s).)

ILLINOIS WORKS APPRENTICESHIP INITIATIVE
PERIODIC REPORT

PREVAILING WAGE CLASSIFICATION	REDUCED PERCENTAGE

PREVAILING WAGE CLASSIFICATION	REDUCED PERCENTAGE

ILLINOIS WORKS APPRENTICESHIP INITIATIVE
PERIODIC REPORT

As you work towards meeting the 10% apprenticeship goal, you will have to follow the new statutorily mandated Illinois Works compliance requirement (per State Legislative update (30ILCS559/20-20(a)(2)) where half of the 10% apprenticeship goal for each wage classification is to be performed by apprentices who are graduates from the Illinois Works Pre-Apprenticeship Program, Climate Works Pre-Apprenticeship Program, or Highway Construction Career Program (graduates of one of the programs or a combination of graduates from the programs can be used for compliance).

Please provide information in Chart 1 for the apprentices who are graduates of the Illinois Works Pre-Apprenticeship Program, Climate Works Pre-Apprenticeship Program, or Highway Construction Career Program and their contributions to the project. Ideally, the last four digits of their Social Security number, and ID number; however, at a minimum, the ID number must be provided.

CHART 1				
A. Prevailing Wage Classification	**B. Pre-apprenticeship Program the Apprentice Graduated from (Illinois Works, Climate Works, or Highway Construction Careers Programs)**	**C. First and Last Name of Apprentices who are Graduates of Illinois Works, Climate Works, or Highway Construction Careers Programs**	**D. Last Four Digits of Social Security # Number of Apprentices who are Graduates of Illinois Works, Climate Works, or Highway Construction Careers Programs**	**E. ID Number (Issued by the Pre-apprenticeship program) of Apprentice who are Graduates of Illinois Works, Climate Works, or Highway Construction Careers Programs**

ILLINOIS WORKS APPRENTICESHIP INITIATIVE
PERIODIC REPORT

CHART 1				
A. Prevailing Wage Classification	**B. Pre-apprenticeship Program the Apprentice Graduated from (Illinois Works, Climate Works, or Highway Construction Careers Programs)**	**C. First and Last Name of Apprentices who are Graduates of Illinois Works, Climate Works, or Highway Construction Careers Programs**	**D. Last Four Digits of Social Security # Number of Apprentices who are Graduates of Illinois Works, Climate Works, or Highway Construction Careers Programs**	**E. ID Number (Issued by the Pre-apprenticeship program) of Apprentice who are Graduates of Illinois Works, Climate Works, or Highway Construction Careers Programs**

ILLINOIS WORKS APPRENTICESHIP INITIATIVE
PERIODIC REPORT

Please provide information in Chart 2 Part A & B for the Apprentices who are graduates from the Illinois Works Pre-Apprenticeship Program, Climate Works Pre-Apprenticeship Program, or Highway Construction Careers Program and their contributions to the project.

CHART 2/PART A					
A. Prevailing Wage Classification	**B. Total hours for Classification in Reporting Period**	**C. Total Apprenticeship Hours for Classification in Reporting Period**	**D. % of Apprenticeship Hours** **(Divide C by B)**	**E. Total Hours for Classification in Reporting Period Performed by Apprentices <u>who are</u> Graduates from Illinois Works, Climate Works, or Highway Construction Centers Programs**	**F. % of Apprenticeship Hours Performed by Apprentices <u>who are</u> Graduates of Illinois Works, Climate Works, or Highway Construction Centers Programs** **(Divide E by B)**

ILLINOIS WORKS APPRENTICESHIP INITIATIVE

PERIODIC REPORT

CHART 2/PART A					
A. Prevailing Wage Classification	**B. Total hours for Classification in Reporting Period**	**C. Total Apprenticeship Hours for Classification in Reporting Period**	**D. % of Apprenticeship Hours (Divide C by B)**	**E. Total Hours for Classification in Reporting Period Performed by Apprentices who are Graduates from Illinois Works, Climate Works, or Highway Construction Careers Programs**	**F. % of Apprenticeship Hours Performed by Apprentices who are Graduates of Illinois Works, Climate Works, or Highway Construction Careers Programs (Divide E by B)**

ILLINOIS WORKS APPRENTICESHIP INITIATIVE

PERIODIC REPORT

CHART 2/PART B (this is a continuation of Chart 2)					
G. Total Hours for Classification (Cumulative from the Start of the Project)	**H. Total Apprenticeship hours for Classification (Cumulative from the Start of the Project)**	**I. % of Apprenticeship Hours (Cumulative from the Start of the Project)** **(Divide H by G)**	**J. Total Apprenticeship Hours for Classification (Cumulative from the Start of the Project) in Reporting Period Performed by Apprentices <u>who are</u> Graduates from Illinois Works, Climate Works, or Highway Construction Careers Programs**	**K. % of Apprenticeship Hours (Cumulative from Start of Project) Performed by Apprentices <u>who are</u> Graduates of Illinois Works, Climate Works, or Highway Construction Careers Programs** **(Divide J by G)**	**L. If no apprenticeship hours recorded, explain.**

ILLINOIS WORKS APPRENTICESHIP INITIATIVE

PERIODIC REPORT

CHART 2/PART B (this is a continuation of Chart 2)					
G. Total Hours for Classification (Cumulative from the Start of the Project)	**H. Total Apprenticeship hours for Classification (Cumulative from the Start of the Project)**	**I. % of Apprenticeship Hours (Cumulative from the Start of the Project)** **(Divide H by G)**	**J. Total Apprenticeship Hours for Classification (Cumulative from the Start of the Project) in Reporting Period Performed by Apprentices <u>who are</u> Graduates from Illinois Works, Climate Works, or Highway Construction Careers Programs**	**K. % of Apprenticeship Hours (Cumulative from Start of Project) Performed by Apprentices <u>who are</u> Graduates of Illinois Works, Climate Works, or Highway Construction Careers Programs** **(Divide J by G)**	**L. If no apprenticeship hours recorded, explain.**

ILLINOIS WORKS APPRENTICESHIP INITIATIVE
PERIODIC REPORT

Organization Certification and State Agency Acknowledgement

1. Organization Certification

By signing this form, I certify to the best of my knowledge and belief that the form is true, complete, and accurate and that any false, fictitious or fraudulent information or the omission of any material fact could result in the immediate termination of my contract, grant, and loan award(s).

Institution/Organization Name

Printed Name (Executive Director or equivalent)

Title (Executive Director or equivalent)

Signature (Executive Director or equivalent)

Date/Time Field

2. State Agency Acknowledgement

State Agency

Printed Name

Title

Signature

Date/Time Field

Intentionally Blank

AGREEMENT BETWEEN OWNER AND CONTRACTOR FOR CONSTRUCTION CONTRACT (STIPULATED PRICE)

This Agreement is by and between **Illinois Alluvial Regional Water Company, Inc.** ("Owner") and _____ ("Contractor").

Terms used in this Agreement have the meanings stated in the General Conditions and the ~~Supplementary~~General Conditions.

Owner and Contractor hereby agree as follows:

ARTICLE 1—WORK

1.01 Contractor shall complete all Work as specified or indicated in the Contract Documents. The Work is generally described as follows: **To construct approximately 30,000lf of finished water transmission main and appurtenances.**

ARTICLE 2—THE PROJECT

2.01 The Project, of which the Work under the Contract Documents is a part, is generally described as follows: **Phase 1b – Contract F – Finished Water Transmission Main**

ARTICLE 3—ENGINEER

3.01 The Owner has retained **MECO-Heneghan Engineers, LLC** ("Engineer") to act as Owner's representative, assume all duties and responsibilities of Engineer, and have the rights and authority assigned to Engineer in the Contract.

3.02 The part of the Project that pertains to the Work has been designed by **Engineer.**

ARTICLE 4—CONTRACT TIMES

4.01 *Time is of the Essence*

A. All time limits for Milestones, if any, Substantial Completion, and completion and readiness for final payment as stated in the Contract Documents are of the essence of the Contract.

4.02 *Contract Times: Dates*

A. The Work will be substantially complete on or before **December 31, 2027**, and completed and ready for final payment in accordance with Paragraph 15.06 of the General Conditions on or before **June 30, 2028**.

4.03 *Milestones*

A. Parts of the Work must be substantially completed on or before the following Milestone(s):

1. Not Applicable.

4.04 *Liquidated Damages*

A. Contractor and Owner recognize that time is of the essence as stated in Paragraph 4.01 above and that Owner will suffer financial and other losses if the Work is not completed and

Copyright© 2018 National Society of Professional Engineers, American Council of Engineering Companies, and American Society of Civil Engineers. All rights reserved.

Milestones not achieved within the Contract Times, as duly modified. The parties also recognize the delays, expense, and difficulties involved in proving, in a legal or arbitration proceeding, the actual loss suffered by Owner if the Work is not completed on time. Accordingly, instead of requiring any such proof, Owner and Contractor agree that as liquidated damages for delay (but not as a penalty):

1. *Substantial Completion:* Contractor shall pay Owner $**4,500.00** for each day that expires after the time (as duly adjusted pursuant to the Contract) specified above for Substantial Completion, until the Work is substantially complete.

2. *Completion of Remaining Work:* After Substantial Completion, if Contractor shall neglect, refuse, or fail to complete the remaining Work within the Contract Times (as duly adjusted pursuant to the Contract) for completion and readiness for final payment, Contractor shall pay Owner $**4,500.00** for each day that expires after such time until the Work is completed and ready for final payment.

3. *Milestones:* Contractor shall pay Owner $**4,500.00** for each day that expires after the time (as duly adjusted pursuant to the Contract) specified above for achievement of Milestone 1, until Milestone 1 is achieved, or until the time specified for Substantial Completion is reached, at which time the rate indicated in Paragraph 4.05.A.1 will apply, rather than the Milestone rate.

4. Liquidated damages for failing to timely attain Milestones, Substantial Completion, and final completion are not additive, and will not be imposed concurrently.

B. If Owner recovers liquidated damages for a delay in completion by Contractor, then such liquidated damages are Owner's sole and exclusive remedy for such delay, and Owner is precluded from recovering any other damages, whether actual, direct, excess, or consequential, for such delay, except for special damages (if any) specified in this Agreement.

4.05 *Special Damages*

A. Contractor shall reimburse Owner (1) for any fines or penalties imposed on Owner as a direct result of the Contractor's failure to attain Substantial Completion according to the Contract Times, and (2) for the actual costs reasonably incurred by Owner for engineering, construction observation, inspection, and administrative services needed after the time specified in Paragraph 4.02 for Substantial Completion (as duly adjusted pursuant to the Contract), until the Work is substantially complete.

B. After Contractor achieves Substantial Completion, if Contractor shall neglect, refuse, or fail to complete the remaining Work within the Contract Times, Contractor shall reimburse Owner for the actual costs reasonably incurred by Owner for engineering, construction observation, inspection, and administrative services needed after the time specified in Paragraph 4.02 for Work to be completed and ready for final payment (as duly adjusted pursuant to the Contract), until the Work is completed and ready for final payment.

C. The special damages imposed in this paragraph are supplemental to any liquidated damages for delayed completion established in this Agreement.

ARTICLE 5—CONTRACT PRICE

5.01 Owner shall pay Contractor for completion of the Work in accordance with the Contract Documents, the amounts that follow, subject to adjustment under the Contract:

Copyright© 2018 National Society of Professional Engineers, American Council of Engineering Companies, and American Society of Civil Engineers. All rights reserved.

A. For all Work, at the prices stated in Contractor's Bid, attached hereto as an exhibit.

ARTICLE 6—PAYMENT PROCEDURES

6.01 *Submittal and Processing of Payments*

A. Contractor shall submit Applications for Payment in accordance with Article 15 of the General Conditions. Applications for Payment will be processed by Engineer as provided in the General Conditions.

6.02 *Progress Payments; Retainage*

A. Owner shall make progress payments on the basis of Contractor's Applications for Payment on or about the **fourth Thursday** day of each month during performance of the Work as provided in Paragraph 6.02.A.1 below, provided that such Applications for Payment have been submitted in a timely manner and otherwise meet the requirements of the Contract. All such payments will be measured by the Schedule of Values established as provided in the General Conditions (and in the case of Unit Price Work based on the number of units completed) or, in the event there is no Schedule of Values, as provided elsewhere in the Contract.

1. Prior to Substantial Completion, progress payments will be made in an amount equal to the percentage indicated below but, in each case, less the aggregate of payments previously made and less such amounts as Owner may withhold, including but not limited to liquidated damages, in accordance with the Contract.

a. **90** percent of the value of the Work completed (with the balance being retainage).

1) If 50 percent or more of the Work has been completed, as determined by Engineer, and if the character and progress of the Work have been satisfactory to Owner and Engineer, then as long as the character and progress of the Work remain satisfactory to Owner and Engineer, there will be no additional retainage; and

b. **90** percent of cost of materials and equipment not incorporated in the Work (with the balance being retainage).

B. Upon Substantial Completion, Owner shall pay an amount sufficient to increase total payments to Contractor to **95** percent of the Work completed, less such amounts set off by Owner pursuant to Paragraph 15.01.E of the General Conditions, and less **200** percent of Engineer's estimate of the value of Work to be completed or corrected as shown on the punch list of items to be completed or corrected prior to final payment.

6.03 *Final Payment*

A. Upon final completion and acceptance of the Work, Owner shall pay the remainder of the Contract Price in accordance with Paragraph 15.06 of the General Conditions.

6.04 *Consent of Surety*

A. Owner will not make final payment, or return or release retainage at Substantial Completion or any other time, unless Contractor submits written consent of the surety to such payment, return, or release.

Copyright© 2018 National Society of Professional Engineers, American Council of Engineering Companies, and American Society of Civil Engineers. All rights reserved.

6.05 *Interest*

A. All amounts not paid when due will bear interest at the rate of **the maximum legal rate** percent per annum.

ARTICLE 7—CONTRACT DOCUMENTS

7.01 *Contents*

A. The Contract Documents consist of all of the following:

1. This Agreement.
2. Bonds:
   a. Performance bond (together with power of attorney).
   b. Payment bond (together with power of attorney).
3. General Conditions.
4. ~~Supplementary~~General Conditions.
5. Specifications as listed in the table of contents of the project manual (copy of list attached).
6. Drawings (not attached but incorporated by reference) consisting of **[number]** sheets with each sheet bearing the following general title: **[title on Drawings]**.
7. ~~Drawings listed on the attached sheet index.~~ Deleted
8. Addenda (numbers **[number]** to **[number]**, inclusive).
9. Exhibits to this Agreement (enumerated as follows):
   a. **~~[list exhibits]~~Contractor's Bid (Pages ___to__, inclusive)**
10. The following which may be delivered or issued on or after the Effective Date of the Contract and are not attached hereto:
    a. Notice to Proceed.
    b. Work Change Directives.
    c. Change Orders.
    d. Field Orders.
    e. Warranty Bond, if any.

B. The Contract Documents listed in Paragraph 7.01.A are attached to this Agreement (except as expressly noted otherwise above).

C. There are no Contract Documents other than those listed above in this Article 7.

D. The Contract Documents may only be amended, modified, or supplemented as provided in the Contract.

Copyright© 2018 National Society of Professional Engineers, American Council of Engineering Companies, and American Society of Civil Engineers. All rights reserved.

ARTICLE 8—REPRESENTATIONS, CERTIFICATIONS, AND STIPULATIONS

8.01 *Contractor's Representations*

A. In order to induce Owner to enter into this Contract, Contractor makes the following representations:

1. Contractor has examined and carefully studied the Contract Documents, including Addenda.

2. Contractor has visited the Site, conducted a thorough visual examination of the Site and adjacent areas, and become familiar with the general, local, and Site conditions that may affect cost, progress, and performance of the Work.

3. Contractor is familiar with all Laws and Regulations that may affect cost, progress, and performance of the Work.

4. Contractor has carefully studied the reports of explorations and tests of subsurface conditions at or adjacent to the Site and the drawings of physical conditions relating to existing surface or subsurface structures at the Site that have been identified in the ~~Supplementary~~General Conditions, with respect to the Technical Data in such reports and drawings.

5. Contractor has carefully studied the reports and drawings relating to Hazardous Environmental Conditions, if any, at or adjacent to the Site that have been identified in the ~~Supplementary~~General Conditions, with respect to Technical Data in such reports and drawings.

6. Contractor has considered the information known to Contractor itself; information commonly known to contractors doing business in the locality of the Site; information and observations obtained from visits to the Site; the Contract Documents; and the Technical Data identified in the ~~Supplementary~~General Conditions or by definition, with respect to the effect of such information, observations, and Technical Data on (a) the cost, progress, and performance of the Work; (b) the means, methods, techniques, sequences, and procedures of construction to be employed by Contractor; and (c) Contractor's safety precautions and programs.

7. Based on the information and observations referred to in the preceding paragraph, Contractor agrees that no further examinations, investigations, explorations, tests, studies, or data are necessary for the performance of the Work at the Contract Price, within the Contract Times, and in accordance with the other terms and conditions of the Contract.

8. Contractor is aware of the general nature of work to be performed by Owner and others at the Site that relates to the Work as indicated in the Contract Documents.

9. Contractor has given Engineer written notice of all conflicts, errors, ambiguities, or discrepancies that Contractor has discovered in the Contract Documents, and of discrepancies between Site conditions and the Contract Documents, and the written resolution thereof by Engineer is acceptable to Contractor.

10. The Contract Documents are generally sufficient to indicate and convey understanding of all terms and conditions for performance and furnishing of the Work.

Copyright© 2018 National Society of Professional Engineers, American Council of Engineering Companies, and American Society of Civil Engineers. All rights reserved.

11. Contractor's entry into this Contract constitutes an incontrovertible representation by Contractor that without exception all prices in the Agreement are premised upon performing and furnishing the Work required by the Contract Documents.

8.02 *Contractor's Certifications*

A. Contractor certifies that it has not engaged in corrupt, fraudulent, collusive, or coercive practices in competing for or in executing the Contract. For the purposes of this Paragraph 8.02:

1. "corrupt practice" means the offering, giving, receiving, or soliciting of anything of value likely to influence the action of a public official in the bidding process or in the Contract execution;

2. "fraudulent practice" means an intentional misrepresentation of facts made (a) to influence the bidding process or the execution of the Contract to the detriment of Owner, (b) to establish Bid or Contract prices at artificial non-competitive levels, or (c) to deprive Owner of the benefits of free and open competition;

3. "collusive practice" means a scheme or arrangement between two or more Bidders, with or without the knowledge of Owner, a purpose of which is to establish Bid prices at artificial, non-competitive levels; and

4. "coercive practice" means harming or threatening to harm, directly or indirectly, persons or their property to influence their participation in the bidding process or affect the execution of the Contract.

8.03 *Standard General Conditions*

A. Owner stipulates that if the General Conditions that are made a part of this Contract are EJCDC® C-700, Standard General Conditions for the Construction Contract (2018), published by the Engineers Joint Contract Documents Committee, and if Owner is the party that has furnished said General Conditions, then Owner has plainly shown all modifications to the standard wording of such published document to the Contractor, through a process such as highlighting or "track changes" (redline/strikeout), or in the ~~Supplementary~~General Conditions.

8.04 *IEPA Stipulations*

A. The CONTRACTOR shall not discriminate on the basis of race, color, national origin, or sex in the performance of this contract. The contractor shall carry out applicable requirements of 40 C.F.R. Part 33 in the award and administration of contracts under EPA financial assistance agreements. Failure by the contractor to carry out these requirements is a material breach of this contract which may result in the termination of this contract or other legally available remedies.

Copyright© 2018 National Society of Professional Engineers, American Council of Engineering Companies, and American Society of Civil Engineers. All rights reserved.

IN WITNESS WHEREOF, Owner and Contractor have signed this Agreement.

This Agreement will be effective on _____ (which is the Effective Date of the Contract).

Owner:

Illinois Alluvial Regional Water Company, Inc.
(typed or printed name of organization)

By: _____
(individual's signature)

Date: _____
(date signed)

Name: Allen Davenport
(typed or printed)

Title: Board President
(typed or printed)

Attest: _____
(individual's signature)

Title: _____
(typed or printed)

Address for giving notices:

1009 State Highway 16

Jerseyville, IL 62052

Designated Representative:

Name: _____
(typed or printed)

Title: _____
(typed or printed)

Address:

Phone: _____

Email: _____

*(If **[Type of Entity]** is a corporation, attach evidence of authority to sign. If **[Type of Entity]** is a public body, attach evidence of authority to sign and resolution or other documents authorizing execution of this Agreement.)*

Contractor:

_____
(typed or printed name of organization)

By: _____
(individual's signature)

Date: _____
(date signed)

Name: _____
(typed or printed)

Title: _____
(typed or printed)

*(If **[Type of Entity]** is a corporation, a partnership, or a joint venture, attach evidence of authority to sign.)*

Attest: _____
(individual's signature)

Title: _____
(typed or printed)

Address for giving notices:

Designated Representative:

Name: _____
(typed or printed)

Title: _____
(typed or printed)

Address:

Phone: _____

Email: _____

License No.: _____
(where applicable)

State: _____

EJCDC® C-520, Agreement between Owner and Contractor for Construction Contract (Stipulated Price).
Copyright© 2018 National Society of Professional Engineers, American Council of Engineering Companies, and American Society of Civil Engineers. All rights reserved.

Intentionally Blank

PERFORMANCE BOND

Contractor	**Surety**
Name: Address *(principal place of business)*:	Name: Address *(principal place of business)*:
Owner Name: **Illinois Alluvial Regional Water Company, Inc.** Mailing address *(principal place of business)*: **1009 State Highway 16, Jerseyville, IL 62052**	**Contract** Description *(name and location)*: **Phase 1b, Contract F – To construct approximately 30,000lf of finished water transmission main and appurtenances.** Contract Price: Effective Date of Contract:

Bond

Bond Amount:

Date of Bond:

(Date of Bond cannot be earlier than Effective Date of Contract)

Modifications to this Bond form:

☐ None ☐ See Paragraph 16

Surety and Contractor, intending to be legally bound hereby, subject to the terms set forth in this Performance Bond, do each cause this Performance Bond to be duly executed by an authorized officer, agent, or representative.

Contractor as Principal	Surety
_____ *(Full formal name of Contractor)*	_____ *(Full formal name of Surety) (corporate seal)*
By: _____ *(Signature)*	By: _____ *(Signature)(Attach Power of Attorney)*
Name: _____ *(Printed or typed)*	Name: _____ *(Printed or typed)*
Title: _____	Title: _____
Attest: _____ *(Signature)*	Attest: _____ *(Signature)*
Name: _____ *(Printed or typed)*	Name: _____ *(Printed or typed)*
Title: _____	Title: _____

Notes: (1) Provide supplemental execution by any additional parties, such as joint venturers. (2) Any singular reference to Contractor, Surety, Owner, or other party is considered plural where applicable.

Copyright© 2018 National Society of Professional Engineers, American Council of Engineering Companies, and American Society of Civil Engineers. All rights reserved.

1. The Contractor and Surety, jointly and severally, bind themselves, their heirs, executors, administrators, successors, and assigns to the Owner for the performance of the Construction Contract, which is incorporated herein by reference.

2. If the Contractor performs the Construction Contract, the Surety and the Contractor shall have no obligation under this Bond, except when applicable to participate in a conference as provided in Paragraph 3.

3. If there is no Owner Default under the Construction Contract, the Surety's obligation under this Bond will arise after:

   3.1. The Owner first provides notice to the Contractor and the Surety that the Owner is considering declaring a Contractor Default. Such notice may indicate whether the Owner is requesting a conference among the Owner, Contractor, and Surety to discuss the Contractor's performance. If the Owner does not request a conference, the Surety may, within five (5) business days after receipt of the Owner's notice, request such a conference. If the Surety timely requests a conference, the Owner shall attend. Unless the Owner agrees otherwise, any conference requested under this Paragraph 3.1 will be held within ten (10) business days of the Surety's receipt of the Owner's notice. If the Owner, the Contractor, and the Surety agree, the Contractor shall be allowed a reasonable time to perform the Construction Contract, but such an agreement does not waive the Owner's right, if any, subsequently to declare a Contractor Default;

   3.2. The Owner declares a Contractor Default, terminates the Construction Contract and notifies the Surety; and

   3.3. The Owner has agreed to pay the Balance of the Contract Price in accordance with the terms of the Construction Contract to the Surety or to a contractor selected to perform the Construction Contract.

4. Failure on the part of the Owner to comply with the notice requirement in Paragraph 3.1 does not constitute a failure to comply with a condition precedent to the Surety's obligations, or release the Surety from its obligations, except to the extent the Surety demonstrates actual prejudice.

5. When the Owner has satisfied the conditions of Paragraph 3, the Surety shall promptly and at the Surety's expense take one of the following actions:

   5.1. Arrange for the Contractor, with the consent of the Owner, to perform and complete the Construction Contract;

   5.2. Undertake to perform and complete the Construction Contract itself, through its agents or independent contractors;

   5.3. Obtain bids or negotiated proposals from qualified contractors acceptable to the Owner for a contract for performance and completion of the Construction Contract, arrange for a contract to be prepared for execution by the Owner and a contractor selected with the Owners concurrence, to be secured with performance and payment bonds executed by a qualified surety equivalent to the bonds issued on the Construction Contract, and pay to the Owner the amount of damages as described in Paragraph 7 in excess of the Balance of the Contract Price incurred by the Owner as a result of the Contractor Default; or

   5.4. Waive its right to perform and complete, arrange for completion, or obtain a new contractor, and with reasonable promptness under the circumstances:

      5.4.1 After investigation, determine the amount for which it may be liable to the Owner and, as soon as practicable after the amount is determined, make payment to the Owner; or

      5.4.2 Deny liability in whole or in part and notify the Owner, citing the reasons for denial.

6. If the Surety does not proceed as provided in Paragraph 5 with reasonable promptness, the Surety shall be deemed to be in default on this Bond seven days after receipt of an additional written notice from the Owner to the Surety demanding that the Surety perform its obligations under this Bond, and the Owner shall be entitled to enforce any remedy available to the Owner. If the Surety proceeds as provided in Paragraph 5.4, and the Owner refuses the payment, or the Surety has denied liability, in whole or in part, without further notice, the Owner shall be entitled to enforce any remedy available to the Owner.

7. If the Surety elects to act under Paragraph 5.1, 5.2, or 5.3, then the responsibilities of the Surety to the Owner will not be greater than those of the Contractor under the Construction Contract, and the responsibilities of the Owner to the Surety will not be greater than those of the Owner under the Construction Contract. Subject to the commitment by the Owner to pay the Balance of the Contract Price, the Surety is obligated, without duplication for:

   7.1. the responsibilities of the Contractor for correction of defective work and completion of the Construction Contract;

   7.2. additional legal, design professional, and delay costs resulting from the Contractor's Default, and resulting from the actions or failure to act of the Surety under Paragraph 5; and

   7.3. liquidated damages, or if no liquidated damages are specified in the Construction Contract, actual damages caused by delayed performance or non-performance of the Contractor.

8. If the Surety elects to act under Paragraph 5.1, 5.3, or 5.4, the Surety's liability is limited to the amount of this Bond.

9. The Surety shall not be liable to the Owner or others for obligations of the Contractor that are unrelated to the Construction Contract, and the Balance of the Contract Price will not be reduced or set off on account of any such unrelated obligations. No right of action will accrue on this Bond to any

Copyright© 2018 National Society of Professional Engineers, American Council of Engineering Companies, and American Society of Civil Engineers. All rights reserved.

person or entity other than the Owner or its heirs, executors, administrators, successors, and assigns.

10. The Surety hereby waives notice of any change, including changes of time, to the Construction Contract or to related subcontracts, purchase orders, and other obligations.

11. Any proceeding, legal or equitable, under this Bond must be instituted in any court of competent jurisdiction in the location in which the work or part of the work is located and must be instituted within two years after a declaration of Contractor Default or within two years after the Contractor ceased working or within two years after the Surety refuses or fails to perform its obligations under this Bond, whichever occurs first. If the provisions of this paragraph are void or prohibited by law, the minimum periods of limitations available to sureties as a defense in the jurisdiction of the suit will be applicable.

12. Notice to the Surety, the Owner, or the Contractor must be mailed or delivered to the address shown on the page on which their signature appears.

13. When this Bond has been furnished to comply with a statutory or other legal requirement in the location where the construction was to be performed, any provision in this Bond conflicting with said statutory or legal requirement will be deemed deleted therefrom and provisions conforming to such statutory or other legal requirement will be deemed incorporated herein. When so furnished, the intent is that this Bond will be construed as a statutory bond and not as a common law bond.

14. Definitions

    14.1. *Balance of the Contract Price*—The total amount payable by the Owner to the Contractor under the Construction Contract after all proper adjustments have been made including allowance for the Contractor for any amounts received or to be received by the Owner in settlement of insurance or other claims for damages to which the Contractor is entitled, reduced by all valid and proper payments made to or on behalf of the Contractor under the Construction Contract.

    14.2. *Construction Contract*—The agreement between the Owner and Contractor identified on the cover page, including all Contract Documents and changes made to the agreement and the Contract Documents.

    14.3. *Contractor Default*—Failure of the Contractor, which has not been remedied or waived, to perform or otherwise to comply with a material term of the Construction Contract.

    14.4. *Owner Default*—Failure of the Owner, which has not been remedied or waived, to pay the Contractor as required under the Construction Contract or to perform and complete or comply with the other material terms of the Construction Contract.

    14.5. *Contract Documents*—All the documents that comprise the agreement between the Owner and Contractor.

15. If this Bond is issued for an agreement between a contractor and subcontractor, the term Contractor in this Bond will be deemed to be Subcontractor and the term Owner will be deemed to be Contractor.

16. Modifications to this Bond are as follows: **None**

Copyright© 2018 National Society of Professional Engineers, American Council of Engineering Companies, and American Society of Civil Engineers. All rights reserved.

Intentionally Blank

PAYMENT BOND

Contractor	**Surety**
Name: Address *(principal place of business)*:	Name: Address *(principal place of business)*:
Owner Name: **Illinois Alluvial Regional Water Company, Inc.** Mailing address *(principal place of business)*: **1009 State Highway 16, Jerseyville, IL 62052**	**Contract** Description *(name and location)*: **Phase 1b, Contract F - To construct approximately 30,000lf of finished water transmission main and appurtenances.** Contract Price: Effective Date of Contract:

Bond

Bond Amount:

Date of Bond:

(Date of Bond cannot be earlier than Effective Date of Contract)

Modifications to this Bond form:

☐ None ☐ See Paragraph 18

Surety and Contractor, intending to be legally bound hereby, subject to the terms set forth in this Payment Bond, do each cause this Payment Bond to be duly executed by an authorized officer, agent, or representative.

Contractor as Principal	Surety
_____ *(Full formal name of Contractor)*	_____ *(Full formal name of Surety) (corporate seal)*
By: _____ *(Signature)*	By: _____ *(Signature)(Attach Power of Attorney)*
Name: _____ *(Printed or typed)*	Name: _____ *(Printed or typed)*
Title: _____	Title: _____
Attest: _____ *(Signature)*	Attest: _____ *(Signature)*
Name: _____ *(Printed or typed)*	Name: _____ *(Printed or typed)*
Title: _____	Title: _____

Notes: (1) Provide supplemental execution by any additional parties, such as joint venturers. (2) Any singular reference to Contractor, Surety, Owner, or other party is considered plural where applicable.

Copyright© 2018 National Society of Professional Engineers, American Council of Engineering Companies, and American Society of Civil Engineers. All rights reserved.

1. The Contractor and Surety, jointly and severally, bind themselves, their heirs, executors, administrators, successors, and assigns to the Owner to pay for labor, materials, and equipment furnished for use in the performance of the Construction Contract, which is incorporated herein by reference, subject to the following terms.

2. If the Contractor promptly makes payment of all sums due to Claimants, and defends, indemnifies, and holds harmless the Owner from claims, demands, liens, or suits by any person or entity seeking payment for labor, materials, or equipment furnished for use in the performance of the Construction Contract, then the Surety and the Contractor shall have no obligation under this Bond.

3. If there is no Owner Default under the Construction Contract, the Surety's obligation to the Owner under this Bond will arise after the Owner has promptly notified the Contractor and the Surety (at the address described in Paragraph 13) of claims, demands, liens, or suits against the Owner or the Owner's property by any person or entity seeking payment for labor, materials, or equipment furnished for use in the performance of the Construction Contract, and tendered defense of such claims, demands, liens, or suits to the Contractor and the Surety.

4. When the Owner has satisfied the conditions in Paragraph 3, the Surety shall promptly and at the Surety's expense defend, indemnify, and hold harmless the Owner against a duly tendered claim, demand, lien, or suit.

5. The Surety's obligations to a Claimant under this Bond will arise after the following:

   5.1. Claimants who do not have a direct contract with the Contractor

      5.1.1. have furnished a written notice of non-payment to the Contractor, stating with substantial accuracy the amount claimed and the name of the party to whom the materials were, or equipment was, furnished or supplied or for whom the labor was done or performed, within ninety (90) days after having last performed labor or last furnished materials or equipment included in the Claim; and

      5.1.2. have sent a Claim to the Surety (at the address described in Paragraph 13).

   5.2. Claimants who are employed by or have a direct contract with the Contractor have sent a Claim to the Surety (at the address described in Paragraph 13).

6. If a notice of non-payment required by Paragraph 5.1.1 is given by the Owner to the Contractor, that is sufficient to satisfy a Claimant's obligation to furnish a written notice of non-payment under Paragraph 5.1.1.

7. When a Claimant has satisfied the conditions of Paragraph 5.1 or 5.2, whichever is applicable, the Surety shall promptly and at the Surety's expense take the following actions:

   7.1. Send an answer to the Claimant, with a copy to the Owner, within sixty (60) days after receipt of the Claim, stating the amounts that are undisputed and the basis for challenging any amounts that are disputed; and

   7.2. Pay or arrange for payment of any undisputed amounts.

   7.3. The Surety's failure to discharge its obligations under Paragraph 7.1 or 7.2 will not be deemed to constitute a waiver of defenses the Surety or Contractor may have or acquire as to a Claim, except as to undisputed amounts for which the Surety and Claimant have reached agreement. If, however, the Surety fails to discharge its obligations under Paragraph 7.1 or 7.2, the Surety shall indemnify the Claimant for the reasonable attorney's fees the Claimant incurs thereafter to recover any sums found to be due and owing to the Claimant.

8. The Surety's total obligation will not exceed the amount of this Bond, plus the amount of reasonable attorney's fees provided under Paragraph 7.3, and the amount of this Bond will be credited for any payments made in good faith by the Surety.

9. Amounts owed by the Owner to the Contractor under the Construction Contract will be used for the performance of the Construction Contract and to satisfy claims, if any, under any construction performance bond. By the Contractor furnishing and the Owner accepting this Bond, they agree that all funds earned by the Contractor in the performance of the Construction Contract are dedicated to satisfying obligations of the Contractor and Surety under this Bond, subject to the Owner's priority to use the funds for the completion of the work.

10. The Surety shall not be liable to the Owner, Claimants, or others for obligations of the Contractor that are unrelated to the Construction Contract. The Owner shall not be liable for the payment of any costs or expenses of any Claimant under this Bond, and shall have under this Bond no obligation to make payments to or give notice on behalf of Claimants, or otherwise have any obligations to Claimants under this Bond.

11. The Surety hereby waives notice of any change, including changes of time, to the Construction Contract or to related subcontracts, purchase orders, and other obligations.

12. No suit or action will be commenced by a Claimant under this Bond other than in a court of competent jurisdiction in the state in which the project that is the subject of the Construction Contract is located or after the expiration of one year from the date (1) on which the Claimant sent a Claim to the Surety pursuant to Paragraph 5.1.2 or 5.2, or (2) on which the last labor or service was performed by anyone or the last materials or equipment were furnished by anyone under the Construction Contract, whichever of (1) or (2) first occurs. If the provisions of this paragraph are void or prohibited by law, the minimum period of limitation available to sureties as a defense in the jurisdiction of the suit will be applicable.

13. Notice and Claims to the Surety, the Owner, or the Contractor must be mailed or delivered to the address shown on the page on which their signature appears. Actual receipt of notice or Claims, however accomplished, will be sufficient compliance as of the date received.

Copyright© 2018 National Society of Professional Engineers, American Council of Engineering Companies, and American Society of Civil Engineers. All rights reserved.

14. When this Bond has been furnished to comply with a statutory or other legal requirement in the location where the construction was to be performed, any provision in this Bond conflicting with said statutory or legal requirement will be deemed deleted here from and provisions conforming to such statutory or other legal requirement will be deemed incorporated herein. When so furnished, the intent is that this Bond will be construed as a statutory bond and not as a common law bond.

15. Upon requests by any person or entity appearing to be a potential beneficiary of this Bond, the Contractor and Owner shall promptly furnish a copy of this Bond or shall permit a copy to be made.

16. Definitions

    16.1. *Claim*—A written statement by the Claimant including at a minimum:

        16.1.1. The name of the Claimant;

        16.1.2. The name of the person for whom the labor was done, or materials or equipment furnished;

        16.1.3. A copy of the agreement or purchase order pursuant to which labor, materials, or equipment was furnished for use in the performance of the Construction Contract;

        16.1.4. A brief description of the labor, materials, or equipment furnished;

        16.1.5. The date on which the Claimant last performed labor or last furnished materials or equipment for use in the performance of the Construction Contract;

        16.1.6. The total amount earned by the Claimant for labor, materials, or equipment furnished as of the date of the Claim;

        16.1.7. The total amount of previous payments received by the Claimant; and

        16.1.8. The total amount due and unpaid to the Claimant for labor, materials, or equipment furnished as of the date of the Claim.

    16.2. *Claimant*—An individual or entity having a direct contract with the Contractor or with a subcontractor of the Contractor to furnish labor, materials, or equipment for use in the performance of the Construction Contract. The term Claimant also includes any individual or entity that has rightfully asserted a claim under an applicable mechanic's lien or similar statute against the real property upon which the Project is located. The intent of this Bond is to include without limitation in the terms of "labor, materials, or equipment" that part of the water, gas, power, light, heat, oil, gasoline, telephone service, or rental equipment used in the Construction Contract, architectural and engineering services required for performance of the work of the Contractor and the Contractor's subcontractors, and all other items for which a mechanic's lien may be asserted in the jurisdiction where the labor, materials, or equipment were furnished.

    16.3. *Construction Contract*—The agreement between the Owner and Contractor identified on the cover page, including all Contract Documents and all changes made to the agreement and the Contract Documents.

    16.4. *Owner Default*—Failure of the Owner, which has not been remedied or waived, to pay the Contractor as required under the Construction Contract or to perform and complete or comply with the other material terms of the Construction Contract.

    16.5. *Contract Documents*—All the documents that comprise the agreement between the Owner and Contractor.

17. If this Bond is issued for an agreement between a contractor and subcontractor, the term Contractor in this Bond will be deemed to be Subcontractor and the term Owner will be deemed to be Contractor.

18. Modifications to this Bond are as follows: **None**

Copyright© 2018 National Society of Professional Engineers, American Council of Engineering Companies, and American Society of Civil Engineers. All rights reserved.

Intentionally Blank

NOTICE TO PROCEED

Owner:	Illinois Alluvial Regional Water Company, Inc.	Owner's Project No.:	
Engineer:	MECO-Heneghan Engineers, LLC	Engineer's Project No.:	71000-412
Contractor:		Contractor's Project No.:	
Project:	Phase 1b		
Contract Name:	Contract F		
Effective Date of Contract:			

Owner hereby notifies Contractor that the Contract Times under the above Contract will commence to run on **_____, 20__** pursuant to Paragraph 4.01 of the General Conditions.

On that date, Contractor shall start performing its obligations under the Contract Documents. No Work will be done at the Site prior to such date.

In accordance with the Agreement:

The date by which Substantial Completion must be achieved is **December 21, 2027**, and the date by which readiness for final payment must be achieved is **June 30, 2028**.

Before starting any Work at the Site, Contractor must comply with the following:

[Note any access limitations, security procedures, or other restrictions]

Owner:	**Illinois Alluvial Regional Water Company, Inc.**
By *(signature)*:	
Name *(printed)*:	Allen Davenport
Title:	Board President
Date Issued:	

Copy: Engineer

Copyright© 2018 National Society of Professional Engineers, American Council of Engineering Companies, and American Society of Civil Engineers. All rights reserved.

Intentionally Blank

STANDARD GENERAL CONDITIONS
OF THE CONSTRUCTION CONTRACT

TABLE OF CONTENTS

Page

Article 1—Definitions and Terminology 1

1.01 *Defined Terms* 1

1.02 *Terminology* 6

Article 2—Preliminary Matters 7

2.01 Delivery of Performance and Payment Bonds; Evidence of Insurance 7

2.02 *Copies of Documents* 7

2.03 *Before Starting Construction* 8

2.04 *Preconstruction Conference; Designation of Authorized Representatives* 8

2.05 *Acceptance of Schedules* 8

2.06 *Electronic Transmittals* 9

Article 3—Contract Documents: Intent, Requirements, Reuse 9

3.01 *Intent* 9

3.02 *Reference Standards* 10

3.03 *Reporting and Resolving Discrepancies* 10

3.04 *Requirements of the Contract Documents* 11

3.05 *Reuse of Documents* 11

Article 4—Commencement and Progress of the Work 12

4.01 *Commencement of Contract Times; Notice to Proceed* 12

4.02 *Starting the Work* 12

4.03 *Reference Points* 12

4.04 *Progress Schedule* 12

4.05 *Delays in Contractor's Progress* 12

Article 5—Site; Subsurface and Physical Conditions; Hazardous Environmental Conditions 14

5.01 *Availability of Lands* 14

5.02 *Use of Site and Other Areas* 14

5.03 *Subsurface and Physical Conditions* 15

5.04 *Differing Subsurface or Physical Conditions* 16

Copyright© 2018 National Society of Professional Engineers, American Council of Engineering Companies, and American Society of Civil Engineers. All rights reserved.

5.05 *Underground Facilities* 18
5.06 *Hazardous Environmental Conditions at Site* 20
Article 6—Bonds and Insurance 22
6.01 *Performance, Payment, and Other Bonds* 22
6.02 *Insurance—General Provisions* 23
6.03 *Contractor's Insurance* 25
6.04 *Builder's Risk and Other Property Insurance* 27
6.06 *Receipt and Application of Property Insurance Proceeds* 29
Article 7—Contractor's Responsibilities 29
7.01 *Contractor's Means and Methods of Construction* 29
7.02 *Supervision and Superintendence* 30
7.03 *Labor; Working Hours* 30
7.04 *Services, Materials, and Equipment* 30
7.05 *"Or Equals"* 31
7.06 *Substitutes* 32
7.07 *Concerning Subcontractors and Suppliers* 33
7.08 *Patent Fees and Royalties* 35
7.09 *Permits* 35
7.10 *Taxes* 36
7.11 *Laws and Regulations* 36
7.12 *Record Documents* 36
7.13 *Safety and Protection* 37
7.14 *Hazard Communication Programs* 38
7.15 *Emergencies* 38
7.16 *Submittals* 38
7.17 *Contractor's General Warranty and Guarantee* 41
7.18 *Indemnification* 42
7.19 *Delegation of Professional Design Services* 42
Article 8—Other Work at the Site 43
8.01 *Other Work* 43
8.02 *Coordination* 44
8.03 *Legal Relationships* 44
Article 9—Owner's Responsibilities 45

Copyright© 2018 National Society of Professional Engineers, American Council of Engineering Companies, and American Society of Civil Engineers. All rights reserved.

9.01 *Communications to Contractor* 45
9.02 *Replacement of Engineer* 45
9.03 *Furnish Data* 45
9.04 *Pay When Due* 46
9.05 *Lands and Easements; Reports, Tests, and Drawings* 46
9.06 *Insurance* 46
9.07 *Change Orders* 46
9.08 *Inspections, Tests, and Approvals* 46
9.09 *Limitations on Owner's Responsibilities* 46
9.10 *Undisclosed Hazardous Environmental Condition* 46
9.11 *Evidence of Financial Arrangements* 46
9.12 *Safety Programs* 46
Article 10—Engineer's Status During Construction 47
10.01 *Owner's Representative* 47
10.02 *Visits to Site* 47
10.03 *Resident Project Representative* 47
10.04 *Engineer's Authority* 49
10.05 *Determinations for Unit Price Work* 49
10.06 *Decisions on Requirements of Contract Documents and Acceptability of Work* 49
10.07 *Limitations on Engineer's Authority and Responsibilities* 49
10.08 *Compliance with Safety Program* 50
Article 11—Changes to the Contract 50
11.01 *Amending and Supplementing the Contract* 50
11.02 *Change Orders* 50
11.03 *Work Change Directives* 51
11.04 *Field Orders* 51
11.05 *Owner-Authorized Changes in the Work* 51
11.06 *Unauthorized Changes in the Work* 52
11.07 *Change of Contract Price* 52
11.08 *Change of Contract Times* 53
11.09 *Change Proposals* 53
11.10 *Notification to Surety* 54
Article 12—Claims 55

Copyright© 2018 National Society of Professional Engineers, American Council of Engineering Companies, and American Society of Civil Engineers. All rights reserved.

12.01 *Claims* 55
Article 13—Cost of the Work; Allowances; Unit Price Work 56
13.01 *Cost of the Work* 56
13.02 *Allowances* 59
13.03 *Unit Price Work* 60
Article 14—Tests and Inspections; Correction, Removal, or Acceptance of Defective Work 61
14.01 *Access to Work* 61
14.02 *Tests, Inspections, and Approvals* 61
14.03 *Defective Work* 62
14.04 *Acceptance of Defective Work* 62
14.05 *Uncovering Work* 63
14.06 *Owner May Stop the Work* 63
14.07 Owner May Correct Defective Work 63
Article 15—Payments to Contractor; Set-Offs; Completion; Correction Period 64
15.01 *Progress Payments* 64
15.02 *Contractor's Warranty of Title* 67
15.03 *Substantial Completion* 67
15.04 *Partial Use or Occupancy* 68
15.05 *Final Inspection* 69
15.06 *Final Payment* 69
15.07 *Waiver of Claims* 70
15.08 *Correction Period* 71
Article 16—Suspension of Work and Termination 72
16.01 *Owner May Suspend Work* 72
16.02 *Owner May Terminate for Cause* 72
16.03 *Owner May Terminate for Convenience* 73
16.04 *Contractor May Stop Work or Terminate* 73
Article 17—Final Resolution of Disputes 74
17.01 *Methods and Procedures* 74
Article 18—Miscellaneous 74
18.01 *Giving Notice* 74
18.02 *Computation of Times* 74
18.03 *Cumulative Remedies* 75

Copyright© 2018 National Society of Professional Engineers, American Council of Engineering Companies, and American Society of Civil Engineers. All rights reserved.

18.04 *Limitation of Damages* 75
18.05 No Waiver 75
18.06 *Survival of Obligations* 75
18.07 *Controlling Law* 75
18.08 Assignment of Contract 75
18.09 *Successors and Assigns* 75
18.10 *Headings* 75

Copyright© 2018 National Society of Professional Engineers, American Council of Engineering Companies, and American Society of Civil Engineers. All rights reserved.

Intentionally Blank

STANDARD GENERAL CONDITIONS OF THE CONSTRUCTION CONTRACT

ARTICLE 1—DEFINITIONS AND TERMINOLOGY

1.01 *Defined Terms*

A. Wherever used in the Bidding Requirements or Contract Documents, a term printed with initial capital letters, including the term's singular and plural forms, will have the meaning indicated in the definitions below. In addition to terms specifically defined, terms with initial capital letters in the Contract Documents include references to identified articles and paragraphs, and the titles of other documents or forms.

1. *Addenda*—Written or graphic instruments issued prior to the opening of Bids which clarify, correct, or change the Bidding Requirements or the proposed Contract Documents.

2. *Agreement*—The written instrument, executed by Owner and Contractor, that sets forth the Contract Price and Contract Times, identifies the parties and the Engineer, and designates the specific items that are Contract Documents.

3. *Application for Payment*—The document prepared by Contractor, in a form acceptable to Engineer, to request progress or final payments, and which is to be accompanied by such supporting documentation as is required by the Contract Documents.

4. *Bid*—The offer of a Bidder submitted on the prescribed form setting forth the prices for the Work to be performed.

5. *Bidder*—An individual or entity that submits a Bid to Owner.

6. *Bidding Documents*—The Bidding Requirements, the proposed Contract Documents, and all Addenda.

7. *Bidding Requirements*—The Advertisement or invitation to bid, Instructions to Bidders, Bid Bond or other Bid security, if any, the Bid Form, and the Bid with any attachments.

8. *Change Order*—A document which is signed by Contractor and Owner and authorizes an addition, deletion, or revision in the Work or an adjustment in the Contract Price or the Contract Times, or other revision to the Contract, issued on or after the Effective Date of the Contract.

9. *Change Proposal*—A written request by Contractor, duly submitted in compliance with the procedural requirements set forth herein, seeking an adjustment in Contract Price or Contract Times; contesting an initial decision by Engineer concerning the requirements of the Contract Documents or the acceptability of Work under the Contract Documents; challenging a set-off against payments due; or seeking other relief with respect to the terms of the Contract.

10. *Claim*

    a. A demand or assertion by Owner directly to Contractor, duly submitted in compliance with the procedural requirements set forth herein, seeking an adjustment of Contract Price or Contract Times; contesting an initial decision by Engineer concerning the

Copyright© 2018 National Society of Professional Engineers, American Council of Engineering Companies, and American Society of Civil Engineers. All rights reserved.

requirements of the Contract Documents or the acceptability of Work under the Contract Documents; contesting Engineer's decision regarding a Change Proposal; seeking resolution of a contractual issue that Engineer has declined to address; or seeking other relief with respect to the terms of the Contract.

b. A demand or assertion by Contractor directly to Owner, duly submitted in compliance with the procedural requirements set forth herein, contesting Engineer's decision regarding a Change Proposal, or seeking resolution of a contractual issue that Engineer has declined to address.

c. A demand or assertion by Owner or Contractor, duly submitted in compliance with the procedural requirements set forth herein, made pursuant to Paragraph 12.01.A.4, concerning disputes arising after Engineer has issued a recommendation of final payment.

d. A demand for money or services by a third party is not a Claim.

11. *Constituent of Concern*—Asbestos, petroleum, radioactive materials, polychlorinated biphenyls (PCBs), lead-based paint (as defined by the HUD/EPA standard), hazardous waste, and any substance, product, waste, or other material of any nature whatsoever that is or becomes listed, regulated, or addressed pursuant to Laws and Regulations regulating, relating to, or imposing liability or standards of conduct concerning, any hazardous, toxic, or dangerous waste, substance, or material.

12. *Contract*—The entire and integrated written contract between Owner and Contractor concerning the Work.

13. *Contract Documents*—Those items so designated in the Agreement, and which together comprise the Contract.

14. *Contract Price*—The money that Owner has agreed to pay Contractor for completion of the Work in accordance with the Contract Documents.

15. *Contract Times*—The number of days or the dates by which Contractor shall: (a) achieve Milestones, if any; (b) achieve Substantial Completion; and (c) complete the Work.

16. *Contractor*—The individual or entity with which Owner has contracted for performance of the Work.

17. *Cost of the Work*—See Paragraph 13.01 for definition.

18. *Drawings*—The part of the Contract that graphically shows the scope, extent, and character of the Work to be performed by Contractor.

19. *Effective Date of the Contract*—The date, indicated in the Agreement, on which the Contract becomes effective.

20. *Electronic Document*—Any Project-related correspondence, attachments to correspondence, data, documents, drawings, information, or graphics, including but not limited to Shop Drawings and other Submittals, that are in an electronic or digital format.

21. *Electronic Means*—Electronic mail (email), upload/download from a secure Project website, or other communications methods that allow: (a) the transmission or communication of Electronic Documents; (b) the documentation of transmissions, including sending and receipt; (c) printing of the transmitted Electronic Document by the

Copyright© 2018 National Society of Professional Engineers, American Council of Engineering Companies, and American Society of Civil Engineers. All rights reserved.

recipient; (d) the storage and archiving of the Electronic Document by sender and recipient; and (e) the use by recipient of the Electronic Document for purposes permitted by this Contract. Electronic Means does not include the use of text messaging, or of Facebook, Twitter, Instagram, or similar social media services for transmission of Electronic Documents.

22. *Engineer*—The individual or entity named as such in the Agreement.

23. *Field Order*—A written order issued by Engineer which requires minor changes in the Work but does not change the Contract Price or the Contract Times.

24. *Hazardous Environmental Condition*—The presence at the Site of Constituents of Concern in such quantities or circumstances that may present a danger to persons or property exposed thereto.

    a. The presence at the Site of materials that are necessary for the execution of the Work, or that are to be incorporated into the Work, and that are controlled and contained pursuant to industry practices, Laws and Regulations, and the requirements of the Contract, is not a Hazardous Environmental Condition.

    b. The presence of Constituents of Concern that are to be removed or remediated as part of the Work is not a Hazardous Environmental Condition.

    c. The presence of Constituents of Concern as part of the routine, anticipated, and obvious working conditions at the Site, is not a Hazardous Environmental Condition.

25. *Laws and Regulations; Laws or Regulations*—Any and all applicable laws, statutes, rules, regulations, ordinances, codes, and binding decrees, resolutions, and orders of any and all governmental bodies, agencies, authorities, and courts having jurisdiction.

26. *Liens*—Charges, security interests, or encumbrances upon Contract-related funds, real property, or personal property.

27. *Milestone*—A principal event in the performance of the Work that the Contract requires Contractor to achieve by an intermediate completion date, or by a time prior to Substantial Completion of all the Work.

28. *Notice of Award*—The written notice by Owner to a Bidder of Owner's acceptance of the Bid.

29. *Notice to Proceed*—A written notice by Owner to Contractor fixing the date on which the Contract Times will commence to run and on which Contractor shall start to perform the Work.

30. *Owner*—The individual or entity with which Contractor has contracted regarding the Work, and which has agreed to pay Contractor for the performance of the Work, pursuant to the terms of the Contract.

31. *Progress Schedule*—A schedule, prepared and maintained by Contractor, describing the sequence and duration of the activities comprising Contractor's plan to accomplish the Work within the Contract Times.

32. *Project*—The total undertaking to be accomplished for Owner by engineers, contractors, and others, including planning, study, design, construction, testing, commissioning, and start-up, and of which the Work to be performed under the Contract Documents is a part.

Copyright© 2018 National Society of Professional Engineers, American Council of Engineering Companies, and American Society of Civil Engineers. All rights reserved.

33. *Resident Project Representative*—The authorized representative of Engineer assigned to assist Engineer at the Site. As used herein, the term Resident Project Representative (RPR) includes any assistants or field staff of Resident Project Representative.

34. *Samples*—Physical examples of materials, equipment, or workmanship that are representative of some portion of the Work and that establish the standards by which such portion of the Work will be judged.

35. *Schedule of Submittals*—A schedule, prepared and maintained by Contractor, of required submittals and the time requirements for Engineer's review of the submittals.

36. *Schedule of Values*—A schedule, prepared and maintained by Contractor, allocating portions of the Contract Price to various portions of the Work and used as the basis for reviewing Contractor's Applications for Payment.

37. *Shop Drawings*—All drawings, diagrams, illustrations, schedules, and other data or information that are specifically prepared or assembled by or for Contractor and submitted by Contractor to illustrate some portion of the Work. Shop Drawings, whether approved or not, are not Drawings and are not Contract Documents.

38. *Site*—Lands or areas indicated in the Contract Documents as being furnished by Owner upon which the Work is to be performed, including rights-of-way and easements, and such other lands or areas furnished by Owner which are designated for the use of Contractor.

39. *Specifications*—The part of the Contract that consists of written requirements for materials, equipment, systems, standards, and workmanship as applied to the Work, and certain administrative requirements and procedural matters applicable to the Work.

40. *Subcontractor*—An individual or entity having a direct contract with Contractor or with any other Subcontractor for the performance of a part of the Work.

41. *Submittal*—A written or graphic document, prepared by or for Contractor, which the Contract Documents require Contractor to submit to Engineer, or that is indicated as a Submittal in the Schedule of Submittals accepted by Engineer. Submittals may include Shop Drawings and Samples; schedules; product data; Owner-delegated designs; sustainable design information; information on special procedures; testing plans; results of tests and evaluations, source quality-control testing and inspections, and field or Site quality-control testing and inspections; warranties and certifications; Suppliers' instructions and reports; records of delivery of spare parts and tools; operations and maintenance data; Project photographic documentation; record documents; and other such documents required by the Contract Documents. Submittals, whether or not approved or accepted by Engineer, are not Contract Documents. Change Proposals, Change Orders, Claims, notices, Applications for Payment, and requests for interpretation or clarification are not Submittals.

42. *Substantial Completion*—The time at which the Work (or a specified part thereof) has progressed to the point where, in the opinion of Engineer, the Work (or a specified part thereof) is sufficiently complete, in accordance with the Contract Documents, so that the Work (or a specified part thereof) can be utilized for the purposes for which it is intended. The terms "substantially complete" and "substantially completed" as applied to all or part of the Work refer to Substantial Completion of such Work.

Copyright© 2018 National Society of Professional Engineers, American Council of Engineering Companies, and American Society of Civil Engineers. All rights reserved.

43. *Successful Bidder*—The Bidder to which the Owner makes an award of contract.

44. *Supplementary Conditions*—~~The part of the Contract that amends or supplements these General Conditions.~~ N/A

45. *Supplier*—A manufacturer, fabricator, supplier, distributor, or vendor having a direct contract with Contractor or with any Subcontractor to furnish materials or equipment to be incorporated in the Work by Contractor or a Subcontractor.

46. *Technical Data*

    a. Those items expressly identified as Technical Data in these Standard General Conditions ~~the Supplementary Conditions~~, with respect to either (1) existing subsurface conditions at or adjacent to the Site, or existing physical conditions at or adjacent to the Site including existing surface or subsurface structures (except Underground Facilities) or (2) Hazardous Environmental Conditions at the Site.

    b. If no such express identifications of Technical Data have been made with respect to conditions at the Site, then Technical Data is defined, with respect to conditions at the Site under Paragraphs 5.03, 5.04, and 5.06, as the data contained in boring logs, recorded measurements of subsurface water levels, assessments of the condition of subsurface facilities, laboratory test results, and other factual, objective information regarding conditions at the Site that are set forth in any geotechnical, environmental, or other Site or facilities conditions report prepared for the Project and made available to Contractor.

    c. Information and data regarding the presence or location of Underground Facilities are not intended to be categorized, identified, or defined as Technical Data, and instead Underground Facilities are shown or indicated on the Drawings.

47. *Underground Facilities*—All active or not-in-service underground lines, pipelines, conduits, ducts, encasements, cables, wires, manholes, vaults, tanks, tunnels, or other such facilities or systems at the Site, including but not limited to those facilities or systems that produce, transmit, distribute, or convey telephone or other communications, cable television, fiber optic transmissions, power, electricity, light, heat, gases, oil, crude oil products, liquid petroleum products, water, steam, waste, wastewater, storm water, other liquids or chemicals, or traffic or other control systems. An abandoned facility or system is not an Underground Facility.

48. *Unit Price Work*—Work to be paid for on the basis of unit prices.

49. *Work*—The entire construction or the various separately identifiable parts thereof required to be provided under the Contract Documents. Work includes and is the result of performing or providing all labor, services, and documentation necessary to produce such construction; furnishing, installing, and incorporating all materials and equipment into such construction; and may include related services such as testing, start-up, and commissioning, all as required by the Contract Documents.

50. *Work Change Directive*—A written directive to Contractor issued on or after the Effective Date of the Contract, signed by Owner and recommended by Engineer, ordering an addition, deletion, or revision in the Work.

51. *SRF* - The State Revolving Fund loan program administered by the Illinois Environmental Protection Agency (IEPA).

Copyright© 2018 National Society of Professional Engineers, American Council of Engineering Companies, and American Society of Civil Engineers. All rights reserved.

52. *IEPA*: Illinois Environmental Protection Agency.

53. *AIS*: American Iron and Steel requirements under federal SRF funding.

54. *BABAA*: Build America, Buy America Act requirements applicable to iron, steel, manufactured products, and construction materials.

1.02 *Terminology*

A. The words and terms discussed in Paragraphs 1.02.B, C, D, and E are not defined terms that require initial capital letters, but, when used in the Bidding Requirements or Contract Documents, have the indicated meaning.

B. *Intent of Certain Terms or Adjectives*: The Contract Documents include the terms "as allowed," "as approved," "as ordered," "as directed" or terms of like effect or import to authorize an exercise of professional judgment by Engineer. In addition, the adjectives "reasonable," "suitable," "acceptable," "proper," "satisfactory," or adjectives of like effect or import are used to describe an action or determination of Engineer as to the Work. It is intended that such exercise of professional judgment, action, or determination will be solely to evaluate, in general, the Work for compliance with the information in the Contract Documents and with the design concept of the Project as a functioning whole as shown or indicated in the Contract Documents (unless there is a specific statement indicating otherwise). The use of any such term or adjective is not intended to and shall not be effective to assign to Engineer any duty or authority to supervise or direct the performance of the Work, or any duty or authority to undertake responsibility contrary to the provisions of Article 10 or any other provision of the Contract Documents.

C. *Day*: The word "day" means a calendar day of 24 hours measured from midnight to the next midnight.

D. *Defective*: The word "defective," when modifying the word "Work," refers to Work that is unsatisfactory, faulty, or deficient in that it:

1. does not conform to the Contract Documents;

2. does not meet the requirements of any applicable inspection, reference standard, test, or approval referred to in the Contract Documents; or

3. has been damaged prior to Engineer's recommendation of final payment (unless responsibility for the protection thereof has been assumed by Owner at Substantial Completion in accordance with Paragraph 15.03 or Paragraph 15.04).

E. *Furnish, Install, Perform, Provide*

1. The word "furnish," when used in connection with services, materials, or equipment, means to supply and deliver said services, materials, or equipment to the Site (or some other specified location) ready for use or installation and in usable or operable condition.

2. The word "install," when used in connection with services, materials, or equipment, means to put into use or place in final position said services, materials, or equipment complete and ready for intended use.

Copyright© 2018 National Society of Professional Engineers, American Council of Engineering Companies, and American Society of Civil Engineers. All rights reserved.

3. The words "perform" or "provide," when used in connection with services, materials, or equipment, means to furnish and install said services, materials, or equipment complete and ready for intended use.

4. If the Contract Documents establish an obligation of Contractor with respect to specific services, materials, or equipment, but do not expressly use any of the four words "furnish," "install," "perform," or "provide," then Contractor shall furnish and install said services, materials, or equipment complete and ready for intended use.

F. *Contract Price or Contract Times*: References to a change in "Contract Price or Contract Times" or "Contract Times or Contract Price" or similar, indicate that such change applies to (1) Contract Price, (2) Contract Times, or (3) both Contract Price and Contract Times, as warranted, even if the term "or both" is not expressed.

G. Unless stated otherwise in the Contract Documents, words or phrases that have a well-known technical or construction industry or trade meaning are used in the Contract Documents in accordance with such recognized meaning.

ARTICLE 2—PRELIMINARY MATTERS

2.01 Delivery of Performance and Payment Bonds; Evidence of Insurance

A. Performance and Payment Bonds: When Contractor delivers the signed counterparts of the Agreement to Owner, Contractor shall also deliver to Owner the performance bond and payment bond (if the Contract requires Contractor to furnish such bonds).

B. Evidence of Contractor's Insurance: When Contractor delivers the signed counterparts of the Agreement to Owner, Contractor shall also deliver to Owner, with copies to each additional insured (as identified in the Contract), the certificates, endorsements, and other evidence of insurance required to be provided by Contractor in accordance with Article 6, except to the extent the Standard General Conditions ~~Supplementary Conditions~~ expressly establish other dates for delivery of specific insurance policies.

C. Evidence of Owner's Insurance: After receipt of the signed counterparts of the Agreement and all required bonds and insurance documentation, Owner shall promptly deliver to Contractor, with copies to each additional insured (as identified in the Contract), the certificates and other evidence of insurance required to be provided by Owner under Article 6.

2.02 *Copies of Documents*

A. Owner shall furnish to Contractor **five** copies of the Contract Documents (including one fully signed counterpart of the Agreement), and one copy in electronic portable document format (PDF). Additional printed copies will be furnished upon request at the cost of reproduction.

B. Owner shall maintain and safeguard at least one original printed record version of the Contract, including Drawings and Specifications signed and sealed by Engineer and other design professionals. Owner shall make such original printed record version of the Contract available to Contractor for review. Owner may delegate the responsibilities under this provision to Engineer.

Copyright© 2018 National Society of Professional Engineers, American Council of Engineering Companies, and American Society of Civil Engineers. All rights reserved.

2.03 *Before Starting Construction*

A. *Preliminary Schedules*: Within 10 days after the Effective Date of the Contract (or as otherwise required by the Contract Documents), Contractor shall submit to Engineer for timely review:

1. a preliminary Progress Schedule indicating the times (numbers of days or dates) for starting and completing the various stages of the Work, including any Milestones specified in the Contract;

2. a preliminary Schedule of Submittals; and

3. a preliminary Schedule of Values for all of the Work which includes quantities and prices of items which when added together equal the Contract Price and subdivides the Work into component parts in sufficient detail to serve as the basis for progress payments during performance of the Work. Such prices will include an appropriate amount of overhead and profit applicable to each item of Work.

B. Contractor shall comply with all requirements of the Illinois Environmental Protection Agency (IEPA) State Revolving Fund (SRF) loan program applicable to this Project, including federal cross-cutting requirements incorporated in the Contract Documents.

2.04 *Preconstruction Conference; Designation of Authorized Representatives*

A. Before any Work at the Site is started, a conference attended by Owner, Contractor, Engineer, and others as appropriate will be held to establish a working understanding among the parties as to the Work, and to discuss the schedules referred to in Paragraph 2.03.A, procedures for handling Shop Drawings, Samples, and other Submittals, processing Applications for Payment, electronic or digital transmittals, and maintaining required records.

B. At this conference Owner and Contractor each shall designate, in writing, a specific individual to act as its authorized representative with respect to the services and responsibilities under the Contract. Such individuals shall have the authority to transmit and receive information, render decisions relative to the Contract, and otherwise act on behalf of each respective party.

2.05 *Acceptance of Schedules*

A. At least 10 days before submission of the first Application for Payment a conference, attended by Contractor, Engineer, and others as appropriate, will be held to review the schedules submitted in accordance with Paragraph 2.03.A. No progress payment will be made to Contractor until acceptable schedules are submitted to Engineer.

1. The Progress Schedule will be acceptable to Engineer if it provides an orderly progression of the Work to completion within the Contract Times. Such acceptance will not impose on Engineer responsibility for the Progress Schedule, for sequencing, scheduling, or progress of the Work, nor interfere with or relieve Contractor from Contractor's full responsibility therefor.

2. Contractor's Schedule of Submittals will be acceptable to Engineer if it provides a workable arrangement for reviewing and processing the required submittals.

3. Contractor's Schedule of Values will be acceptable to Engineer as to form and substance if it provides a reasonable allocation of the Contract Price to the component parts of the Work.

Copyright© 2018 National Society of Professional Engineers, American Council of Engineering Companies, and American Society of Civil Engineers. All rights reserved.

4. If a schedule is not acceptable, Contractor will have an additional 10 days to revise and resubmit the schedule.

2.06 *Electronic Transmittals*

A. Except as otherwise stated elsewhere in the Contract, the Owner, Engineer, and Contractor may transmit, and shall accept, Electronic Documents transmitted by Electronic Means.

B. If the Contract does not establish protocols for Electronic Means, then Owner, Engineer, and Contractor shall jointly develop such protocols.

C. Subject to any governing protocols for Electronic Means, when transmitting Electronic Documents by Electronic Means, the transmitting party makes no representations as to long-term compatibility, usability, or readability of the Electronic Documents resulting from the recipient's use of software application packages, operating systems, or computer hardware differing from those used in the drafting or transmittal of the Electronic Documents.

ARTICLE 3—CONTRACT DOCUMENTS: INTENT, REQUIREMENTS, REUSE

3.01 *Intent*

A. The Contract Documents are complementary; what is required by one Contract Document is as binding as if required by all.

B. It is the intent of the Contract Documents to describe a functionally complete Project (or part thereof) to be constructed in accordance with the Contract Documents.

C. Unless otherwise stated in the Contract Documents, if there is a discrepancy between the electronic versions of the Contract Documents (including any printed copies derived from such electronic versions) and the printed record version, the printed record version will govern.

D. The Contract supersedes prior negotiations, representations, and agreements, whether written or oral.

E. Engineer will issue clarifications and interpretations of the Contract Documents as provided herein.

F. Any provision or part of the Contract Documents held to be void or unenforceable under any Law or Regulation will be deemed stricken, and all remaining provisions will continue to be valid and binding upon Owner and Contractor, which agree that the Contract Documents will be reformed to replace such stricken provision or part thereof with a valid and enforceable provision that comes as close as possible to expressing the intention of the stricken provision.

G. Nothing in the Contract Documents creates:

1. any contractual relationship between Owner or Engineer and any Subcontractor, Supplier, or other individual or entity performing or furnishing any of the Work, for the benefit of such Subcontractor, Supplier, or other individual or entity; or

2. any obligation on the part of Owner or Engineer to pay or to see to the payment of any money due any such Subcontractor, Supplier, or other individual or entity, except as may otherwise be required by Laws and Regulations.

Copyright© 2018 National Society of Professional Engineers, American Council of Engineering Companies, and American Society of Civil Engineers. All rights reserved.

H. Contractor acknowledges that this Project is funded in whole or in part by the State Revolving Fund administered by IEPA and shall comply with all applicable federal and state requirements included in the Contract Documents.

3.02 *Reference Standards*

A. *Standards Specifications, Codes, Laws and Regulations*

1. Reference in the Contract Documents to standard specifications, manuals, reference standards, or codes of any technical society, organization, or association, or to Laws or Regulations, whether such reference be specific or by implication, means the standard specification, manual, reference standard, code, or Laws or Regulations in effect at the time of opening of Bids (or on the Effective Date of the Contract if there were no Bids), except as may be otherwise specifically stated in the Contract Documents.

2. No provision of any such standard specification, manual, reference standard, or code, and no instruction of a Supplier, will be effective to change the duties or responsibilities of Owner, Contractor, or Engineer from those set forth in the part of the Contract Documents prepared by or for Engineer. No such provision or instruction shall be effective to assign to Owner or Engineer any duty or authority to supervise or direct the performance of the Work, or any duty or authority to undertake responsibility inconsistent with the provisions of the part of the Contract Documents prepared by or for Engineer.

3.03 *Reporting and Resolving Discrepancies*

A. *Reporting Discrepancies*

1. *Contractor's Verification of Figures and Field Measurements*: Before undertaking each part of the Work, Contractor shall carefully study the Contract Documents, and check and verify pertinent figures and dimensions therein, particularly with respect to applicable field measurements. Contractor shall promptly report in writing to Engineer any conflict, error, ambiguity, or discrepancy that Contractor discovers, or has actual knowledge of, and shall not proceed with any Work affected thereby until the conflict, error, ambiguity, or discrepancy is resolved by a clarification or interpretation by Engineer, or by an amendment or supplement to the Contract issued pursuant to Paragraph 11.01.

2. *Contractor's Review of Contract Documents*: If, before or during the performance of the Work, Contractor discovers any conflict, error, ambiguity, or discrepancy within the Contract Documents, or between the Contract Documents and (a) any applicable Law or Regulation, (b) actual field conditions, (c) any standard specification, manual, reference standard, or code, or (d) any instruction of any Supplier, then Contractor shall promptly report it to Engineer in writing. Contractor shall not proceed with the Work affected thereby (except in an emergency as required by Paragraph 7.15) until the conflict, error, ambiguity, or discrepancy is resolved, by a clarification or interpretation by Engineer, or by an amendment or supplement to the Contract issued pursuant to Paragraph 11.01.

3. Contractor shall not be liable to Owner or Engineer for failure to report any conflict, error, ambiguity, or discrepancy in the Contract Documents unless Contractor had actual knowledge thereof.

Copyright© 2018 National Society of Professional Engineers, American Council of Engineering Companies, and American Society of Civil Engineers. All rights reserved.

B. *Resolving Discrepancies*

1. Except as may be otherwise specifically stated in the Contract Documents, the provisions of the part of the Contract Documents prepared by or for Engineer take precedence in resolving any conflict, error, ambiguity, or discrepancy between such provisions of the Contract Documents and:

   a. the provisions of any standard specification, manual, reference standard, or code, or the instruction of any Supplier (whether or not specifically incorporated by reference as a Contract Document); or

   b. the provisions of any Laws or Regulations applicable to the performance of the Work (unless such an interpretation of the provisions of the Contract Documents would result in violation of such Law or Regulation).

3.04 *Requirements of the Contract Documents*

A. During the performance of the Work and until final payment, Contractor and Owner shall submit to the Engineer in writing all matters in question concerning the requirements of the Contract Documents (sometimes referred to as requests for information or interpretation—RFIs), or relating to the acceptability of the Work under the Contract Documents, as soon as possible after such matters arise. Engineer will be the initial interpreter of the requirements of the Contract Documents, and judge of the acceptability of the Work.

B. Engineer will, with reasonable promptness, render a written clarification, interpretation, or decision on the issue submitted, or initiate an amendment or supplement to the Contract Documents. Engineer's written clarification, interpretation, or decision will be final and binding on Contractor, unless it appeals by submitting a Change Proposal, and on Owner, unless it appeals by filing a Claim.

C. If a submitted matter in question concerns terms and conditions of the Contract Documents that do not involve (1) the performance or acceptability of the Work under the Contract Documents, (2) the design (as set forth in the Drawings, Specifications, or otherwise), or (3) other engineering or technical matters, then Engineer will promptly notify Owner and Contractor in writing that Engineer is unable to provide a decision or interpretation. If Owner and Contractor are unable to agree on resolution of such a matter in question, either party may pursue resolution as provided in Article 12.

3.05 *Reuse of Documents*

A. Contractor and its Subcontractors and Suppliers shall not:

1. have or acquire any title to or ownership rights in any of the Drawings, Specifications, or other documents (or copies of any thereof) prepared by or bearing the seal of Engineer or its consultants, including electronic media versions, or reuse any such Drawings, Specifications, other documents, or copies thereof on extensions of the Project or any other project without written consent of Owner and Engineer and specific written verification or adaptation by Engineer; or

2. have or acquire any title or ownership rights in any other Contract Documents, reuse any such Contract Documents for any purpose without Owner's express written consent, or violate any copyrights pertaining to such Contract Documents.

Copyright© 2018 National Society of Professional Engineers, American Council of Engineering Companies, and American Society of Civil Engineers. All rights reserved.

B. The prohibitions of this Paragraph 3.05 will survive final payment, or termination of the Contract. Nothing herein precludes Contractor from retaining copies of the Contract Documents for record purposes.

ARTICLE 4—COMMENCEMENT AND PROGRESS OF THE WORK

4.01 *Commencement of Contract Times; Notice to Proceed*

A. Contractor shall not commence construction until the IEPA construction permit, if required, has been issued and all SRF funding approvals have been received by the Owner. ~~In no event will the Contract Times commence to run later than the 60th day after the day of Bid opening or the 30th day after the Effective Date of the Contract, whichever date is earlier.~~

4.02 *Starting the Work*

A. Contractor shall start to perform the Work on the date when the Contract Times commence to run. No Work may be done at the Site prior to such date.

4.03 *Reference Points*

A. Owner shall provide engineering surveys to establish reference points for construction which in Engineer's judgment are necessary to enable Contractor to proceed with the Work. Contractor shall be responsible for laying out the Work, shall protect and preserve the established reference points and property monuments, and shall make no changes or relocations without the prior written approval of Owner. Contractor shall report to Engineer whenever any reference point or property monument is lost or destroyed or requires relocation because of necessary changes in grades or locations, and shall be responsible for the accurate replacement or relocation of such reference points or property monuments by professionally qualified personnel.

4.04 *Progress Schedule*

A. Contractor shall adhere to the Progress Schedule established in accordance with Paragraph 2.05 as it may be adjusted from time to time as provided below.

1. Contractor shall submit to Engineer for acceptance (to the extent indicated in Paragraph 2.05) proposed adjustments in the Progress Schedule that will not result in changing the Contract Times.

2. Proposed adjustments in the Progress Schedule that will change the Contract Times must be submitted in accordance with the requirements of Article 11.

B. Contractor shall carry on the Work and adhere to the Progress Schedule during all disputes or disagreements with Owner. No Work will be delayed or postponed pending resolution of any disputes or disagreements, or during any appeal process, except as permitted by Paragraph 16.04, or as Owner and Contractor may otherwise agree in writing.

4.05 *Delays in Contractor's Progress*

A. If Owner, Engineer, or anyone for whom Owner is responsible, delays, disrupts, or interferes with the performance or progress of the Work, then Contractor shall be entitled to an equitable adjustment in Contract Price or Contract Times.

B. Contractor shall not be entitled to an adjustment in Contract Price or Contract Times for delay, disruption, or interference caused by or within the control of Contractor. Delay, disruption,

Copyright© 2018 National Society of Professional Engineers, American Council of Engineering Companies, and American Society of Civil Engineers. All rights reserved.

and interference attributable to and within the control of a Subcontractor or Supplier shall be deemed to be within the control of Contractor.

C. If Contractor's performance or progress is delayed, disrupted, or interfered with by unanticipated causes not the fault of and beyond the control of Owner, Contractor, and those for which they are responsible, then Contractor shall be entitled to an equitable adjustment in Contract Times. Such an adjustment will be Contractor's sole and exclusive remedy for the delays, disruption, and interference described in this paragraph. Causes of delay, disruption, or interference that may give rise to an adjustment in Contract Times under this paragraph include but are not limited to the following:

   1. Severe and unavoidable natural catastrophes such as fires, floods, epidemics, and earthquakes;

   2. Abnormal weather conditions;

   3. Acts or failures to act of third-party utility owners or other third-party entities (other than those third-party utility owners or other third-party entities performing other work at or adjacent to the Site as arranged by or under contract with Owner, as contemplated in Article 8); and

   4. Acts of war or terrorism.

D. Contractor's entitlement to an adjustment of Contract Times or Contract Price is limited as follows:d

   1. Contractor's entitlement to an adjustment of the Contract Times is conditioned on the delay, disruption, or interference adversely affecting an activity on the critical path to completion of the Work, as of the time of the delay, disruption, or interference.

   2. Contractor shall not be entitled to an adjustment in Contract Price for any delay, disruption, or interference if such delay is concurrent with a delay, disruption, or interference caused by or within the control of Contractor. Such a concurrent delay by Contractor shall not preclude an adjustment of Contract Times to which Contractor is otherwise entitled.

   3. Adjustments of Contract Times or Contract Price are subject to the provisions of Article 11.

E. Each Contractor request or Change Proposal seeking an increase in Contract Times or Contract Price must be supplemented by supporting data that sets forth in detail the following:

   1. The circumstances that form the basis for the requested adjustment;

   2. The date upon which each cause of delay, disruption, or interference began to affect the progress of the Work;

   3. The date upon which each cause of delay, disruption, or interference ceased to affect the progress of the Work;

   4. The number of days' increase in Contract Times claimed as a consequence of each such cause of delay, disruption, or interference; and

   5. The impact on Contract Price, in accordance with the provisions of Paragraph 11.07.

Copyright© 2018 National Society of Professional Engineers, American Council of Engineering Companies, and American Society of Civil Engineers. All rights reserved.

6. Contractor shall also furnish such additional supporting documentation as Owner or Engineer may require including, where appropriate, a revised progress schedule indicating all the activities affected by the delay, disruption, or interference, and an explanation of the effect of the delay, disruption, or interference on the critical path to completion of the Work.

F. Delays, disruption, and interference to the performance or progress of the Work resulting from the existence of a differing subsurface or physical condition, an Underground Facility that was not shown or indicated by the Contract Documents, or not shown or indicated with reasonable accuracy, and those resulting from Hazardous Environmental Conditions, are governed by Article 5, together with the provisions of Paragraphs 4.05.D and 4.05.E.

G. Paragraph 8.03 addresses delays, disruption, and interference to the performance or progress of the Work resulting from the performance of certain other work at or adjacent to the Site.

ARTICLE 5—SITE; SUBSURFACE AND PHYSICAL CONDITIONS; HAZARDOUS ENVIRONMENTAL CONDITIONS

5.01 *Availability of Lands*

A. Owner shall furnish the Site. Owner shall notify Contractor in writing of any encumbrances or restrictions not of general application but specifically related to use of the Site with which Contractor must comply in performing the Work.

B. Upon reasonable written request, Owner shall furnish Contractor with a current statement of record legal title and legal description of the lands upon which permanent improvements are to be made and Owner's interest therein as necessary for giving notice of or filing a mechanic's or construction lien against such lands in accordance with applicable Laws and Regulations.

C. Contractor shall provide for all additional lands and access thereto that may be required for temporary construction facilities or storage of materials and equipment.

5.02 *Use of Site and Other Areas*

A. *Limitation on Use of Site and Other Areas*

1. Contractor shall confine construction equipment, temporary construction facilities, the storage of materials and equipment, and the operations of workers to the Site, adjacent areas that Contractor has arranged to use through construction easements or otherwise, and other adjacent areas permitted by Laws and Regulations, and shall not unreasonably encumber the Site and such other adjacent areas with construction equipment or other materials or equipment. Contractor shall assume full responsibility for (a) damage to the Site; (b) damage to any such other adjacent areas used for Contractor's operations; (c) damage to any other adjacent land or areas, or to improvements, structures, utilities, or similar facilities located at such adjacent lands or areas; and (d) for injuries and losses sustained by the owners or occupants of any such land or areas; provided that such damage or injuries result from the performance of the Work or from other actions or conduct of the Contractor or those for which Contractor is responsible.

2. If a damage or injury claim is made by the owner or occupant of any such land or area because of the performance of the Work, or because of other actions or conduct of the Contractor or those for which Contractor is responsible, Contractor shall (a) take immediate corrective or remedial action as required by Paragraph 7.13, or otherwise; (b)

Copyright© 2018 National Society of Professional Engineers, American Council of Engineering Companies, and American Society of Civil Engineers. All rights reserved.

promptly attempt to settle the claim as to all parties through negotiations with such owner or occupant, or otherwise resolve the claim by arbitration or other dispute resolution proceeding, or in a court of competent jurisdiction; and (c) to the fullest extent permitted by Laws and Regulations, indemnify and hold harmless Owner and Engineer, and the officers, directors, members, partners, employees, agents, consultants and subcontractors of each and any of them, from and against any such claim, and against all costs, losses, and damages (including but not limited to all fees and charges of engineers, architects, attorneys, and other professionals and all court or arbitration or other dispute resolution costs) arising out of or relating to any claim or action, legal or equitable, brought by any such owner or occupant against Owner, Engineer, or any other party indemnified hereunder to the extent caused directly or indirectly, in whole or in part by, or based upon, Contractor's performance of the Work, or because of other actions or conduct of the Contractor or those for which Contractor is responsible.

B. *Removal of Debris During Performance of the Work*: During the progress of the Work the Contractor shall keep the Site and other adjacent areas free from accumulations of waste materials, rubbish, and other debris. Removal and disposal of such waste materials, rubbish, and other debris will conform to applicable Laws and Regulations.

C. *Cleaning*: Prior to Substantial Completion of the Work Contractor shall clean the Site and the Work and make it ready for utilization by Owner. At the completion of the Work Contractor shall remove from the Site and adjacent areas all tools, appliances, construction equipment and machinery, and surplus materials and shall restore to original condition all property not designated for alteration by the Contract Documents.

D. *Loading of Structures*: Contractor shall not load nor permit any part of any structure to be loaded in any manner that will endanger the structure, nor shall Contractor subject any part of the Work or adjacent structures or land to stresses or pressures that will endanger them.

5.03 *Subsurface and Physical Conditions*

A. No Reports of explorations or tests of subsurface conditions at or adjacent to the Site, or drawings of physical conditions relating to existing surface or subsurface structures at the Site, are known to the Owner.

~~A. *Reports and Drawings*: The Supplementary Conditions identify:~~

~~1. Those reports of explorations and tests of subsurface conditions at or adjacent to the Site that contain Technical Data;~~

~~2. Those drawings of existing physical conditions at or adjacent to the Site, including those drawings depicting existing surface or subsurface structures at or adjacent to the Site (except Underground Facilities), that contain Technical Data; and~~

~~3. Technical Data contained in such reports and drawings.~~

~~B. *Underground Facilities*: Underground Facilities are shown or indicated on the Drawings, pursuant to Paragraph 5.05, and not in the drawings referred to in Paragraph 5.03.A. Information and data regarding the presence or location of Underground Facilities are not intended to be categorized, identified, or defined as Technical Data.~~

~~C. *Reliance by Contractor on Technical Data*: Contractor may rely upon the accuracy of the Technical Data expressly identified in the Supplementary Conditions with respect to such reports and drawings, but such reports and drawings are not Contract Documents. If no such~~

Copyright© 2018 National Society of Professional Engineers, American Council of Engineering Companies, and American Society of Civil Engineers. All rights reserved.

~~express identification has been made, then Contractor may rely upon the accuracy of the Technical Data as defined in Paragraph 1.01.A.46.b.~~

~~D. *Limitations of Other Data and Documents*: Except for such reliance on Technical Data, Contractor may not rely upon or make any claim against Owner or Engineer, or any of their officers, directors, members, partners, employees, agents, consultants, or subcontractors, with respect to:~~

~~1. the completeness of such reports and drawings for Contractor's purposes, including, but not limited to, any aspects of the means, methods, techniques, sequences, and procedures of construction to be employed by Contractor, and safety precautions and programs incident thereto;~~

~~2. other data, interpretations, opinions, and information contained in such reports or shown or indicated in such drawings;~~

~~3. the contents of other Site-related documents made available to Contractor, such as record drawings from other projects at or adjacent to the Site, or Owner's archival documents concerning the Site; or~~

~~4. any Contractor interpretation of or conclusion drawn from any Technical Data or any such other data, interpretations, opinions, or information.~~

5.04 *Differing Subsurface or Physical Conditions*

A. *Notice by Contractor*: If Contractor believes that any subsurface or physical condition that is uncovered or revealed at the Site:

1. is of such a nature as to establish that any Technical Data on which Contractor is entitled to rely as provided in Paragraph 5.03 is materially inaccurate;

2. is of such a nature as to require a change in the Drawings or Specifications;

3. differs materially from that shown or indicated in the Contract Documents; or

4. is of an unusual nature, and differs materially from conditions ordinarily encountered and generally recognized as inherent in work of the character provided for in the Contract Documents;

then Contractor shall, promptly after becoming aware thereof and before further disturbing the subsurface or physical conditions or performing any Work in connection therewith (except in an emergency as required by Paragraph 7.15), notify Owner and Engineer in writing about such condition. Contractor shall not further disturb such condition or perform any Work in connection therewith (except with respect to an emergency) until receipt of a written statement permitting Contractor to do so.

B. *Engineer's Review*: After receipt of written notice as required by the preceding paragraph, Engineer will promptly review the subsurface or physical condition in question; determine whether it is necessary for Owner to obtain additional exploration or tests with respect to the condition; conclude whether the condition falls within any one or more of the differing site condition categories in Paragraph 5.04.A; obtain any pertinent cost or schedule information from Contractor; prepare recommendations to Owner regarding the Contractor's resumption of Work in connection with the subsurface or physical condition in question and the need for any change in the Drawings or Specifications; and advise Owner in writing of Engineer's findings, conclusions, and recommendations.

Copyright© 2018 National Society of Professional Engineers, American Council of Engineering Companies, and American Society of Civil Engineers. All rights reserved.

C. *Owner's Statement to Contractor Regarding Site Condition*: After receipt of Engineer's written findings, conclusions, and recommendations, Owner shall issue a written statement to Contractor (with a copy to Engineer) regarding the subsurface or physical condition in question, addressing the resumption of Work in connection with such condition, indicating whether any change in the Drawings or Specifications will be made, and adopting or rejecting Engineer's written findings, conclusions, and recommendations, in whole or in part.

D. *Early Resumption of Work*: If at any time Engineer determines that Work in connection with the subsurface or physical condition in question may resume prior to completion of Engineer's review or Owner's issuance of its statement to Contractor, because the condition in question has been adequately documented, and analyzed on a preliminary basis, then the Engineer may at its discretion instruct Contractor to resume such Work.

E. *Possible Price and Times Adjustments*

1. Contractor shall be entitled to an equitable adjustment in Contract Price or Contract Times, to the extent that the existence of a differing subsurface or physical condition, or any related delay, disruption, or interference, causes an increase or decrease in Contractor's cost of, or time required for, performance of the Work; subject, however, to the following:

    a. Such condition must fall within any one or more of the categories described in Paragraph 5.04.A;

    b. With respect to Work that is paid for on a unit price basis, any adjustment in Contract Price will be subject to the provisions of Paragraph 13.03; and,

    c. Contractor's entitlement to an adjustment of the Contract Times is subject to the provisions of Paragraphs 4.05.D and 4.05.E.

2. Contractor shall not be entitled to any adjustment in the Contract Price or Contract Times with respect to a subsurface or physical condition if:

    a. Contractor knew of the existence of such condition at the time Contractor made a commitment to Owner with respect to Contract Price and Contract Times by the submission of a Bid or becoming bound under a negotiated contract, or otherwise;

    b. The existence of such condition reasonably could have been discovered or revealed as a result of any examination, investigation, exploration, test, or study of the Site and contiguous areas expressly required by the Bidding Requirements or Contract Documents to be conducted by or for Contractor prior to Contractor's making such commitment; or

    c. Contractor failed to give the written notice required by Paragraph 5.04.A.

3. If Owner and Contractor agree regarding Contractor's entitlement to and the amount or extent of any adjustment in the Contract Price or Contract Times, then any such adjustment will be set forth in a Change Order.

4. Contractor may submit a Change Proposal regarding its entitlement to or the amount or extent of any adjustment in the Contract Price or Contract Times, no later than 30 days after Owner's issuance of the Owner's written statement to Contractor regarding the subsurface or physical condition in question.

Copyright© 2018 National Society of Professional Engineers, American Council of Engineering Companies, and American Society of Civil Engineers. All rights reserved.

F. *Underground Facilities; Hazardous Environmental Conditions*: Paragraph 5.05 governs rights and responsibilities regarding the presence or location of Underground Facilities. Paragraph 5.06 governs rights and responsibilities regarding Hazardous Environmental Conditions. The provisions of Paragraphs 5.03 and 5.04 are not applicable to the presence or location of Underground Facilities, or to Hazardous Environmental Conditions.

5.05 *Underground Facilities*

A. *Contractor's Responsibilities*: Unless it is otherwise expressly provided in the ~~Supplementary Conditions~~General Conditions, the cost of all of the following are included in the Contract Price, and Contractor shall have full responsibility for:

1. reviewing and checking all information and data regarding existing Underground Facilities at the Site;
2. complying with applicable state and local utility damage prevention Laws and Regulations;
3. verifying the actual location of those Underground Facilities shown or indicated in the Contract Documents as being within the area affected by the Work, by exposing such Underground Facilities during the course of construction;
4. coordination of the Work with the owners (including Owner) of such Underground Facilities, during construction; and
5. the safety and protection of all existing Underground Facilities at the Site, and repairing any damage thereto resulting from the Work.

B. *Notice by Contractor*: If Contractor believes that an Underground Facility that is uncovered or revealed at the Site was not shown or indicated on the Drawings, or was not shown or indicated on the Drawings with reasonable accuracy, then Contractor shall, promptly after becoming aware thereof and before further disturbing conditions affected thereby or performing any Work in connection therewith (except in an emergency as required by Paragraph 7.15), notify Owner and Engineer in writing regarding such Underground Facility.

C. *Engineer's Review*: Engineer will:

1. promptly review the Underground Facility and conclude whether such Underground Facility was not shown or indicated on the Drawings, or was not shown or indicated with reasonable accuracy;
2. identify and communicate with the owner of the Underground Facility; prepare recommendations to Owner (and if necessary issue any preliminary instructions to Contractor) regarding the Contractor's resumption of Work in connection with the Underground Facility in question;
3. obtain any pertinent cost or schedule information from Contractor; determine the extent, if any, to which a change is required in the Drawings or Specifications to reflect and document the consequences of the existence or location of the Underground Facility; and
4. advise Owner in writing of Engineer's findings, conclusions, and recommendations.

During such time, Contractor shall be responsible for the safety and protection of such Underground Facility.

Copyright© 2018 National Society of Professional Engineers, American Council of Engineering Companies, and American Society of Civil Engineers. All rights reserved.

D. *Owner's Statement to Contractor Regarding Underground Facility*: After receipt of Engineer's written findings, conclusions, and recommendations, Owner shall issue a written statement to Contractor (with a copy to Engineer) regarding the Underground Facility in question addressing the resumption of Work in connection with such Underground Facility, indicating whether any change in the Drawings or Specifications will be made, and adopting or rejecting Engineer's written findings, conclusions, and recommendations in whole or in part.

E. *Early Resumption of Work*: If at any time Engineer determines that Work in connection with the Underground Facility may resume prior to completion of Engineer's review or Owner's issuance of its statement to Contractor, because the Underground Facility in question and conditions affected by its presence have been adequately documented, and analyzed on a preliminary basis, then the Engineer may at its discretion instruct Contractor to resume such Work.

F. *Possible Price and Times Adjustments*

1. Contractor shall be entitled to an equitable adjustment in the Contract Price or Contract Times, to the extent that any existing Underground Facility at the Site that was not shown or indicated on the Drawings, or was not shown or indicated with reasonable accuracy, or any related delay, disruption, or interference, causes an increase or decrease in Contractor's cost of, or time required for, performance of the Work; subject, however, to the following:

    a. With respect to Work that is paid for on a unit price basis, any adjustment in Contract Price will be subject to the provisions of Paragraph 13.03;

    b. Contractor's entitlement to an adjustment of the Contract Times is subject to the provisions of Paragraphs 4.05.D and 4.05.E; and

    c. Contractor gave the notice required in Paragraph 5.05.B.

2. If Owner and Contractor agree regarding Contractor's entitlement to and the amount or extent of any adjustment in the Contract Price or Contract Times, then any such adjustment will be set forth in a Change Order.

3. Contractor may submit a Change Proposal regarding its entitlement to or the amount or extent of any adjustment in the Contract Price or Contract Times, no later than 30 days after Owner's issuance of the Owner's written statement to Contractor regarding the Underground Facility in question.

4. The information and data shown or indicated on the Drawings with respect to existing Underground Facilities at the Site is based on information and data (a) furnished by the owners of such Underground Facilities, or by others, (b) obtained from available records, or (c) gathered in an investigation conducted in accordance with the current edition of ASCE 38, Standard Guideline for the Collection and Depiction of Existing Subsurface Utility Data, by the American Society of Civil Engineers. If such information or data is incorrect or incomplete, Contractor's remedies are limited to those set forth in this Paragraph 5.05.F.

Copyright© 2018 National Society of Professional Engineers, American Council of Engineering Companies, and American Society of Civil Engineers. All rights reserved.

5.06 *Hazardous Environmental Conditions at Site*

A. *Reports and Drawings*: No reports or drawings related to Hazardous Environmental Conditions at the Site are known to Owner. ~~The Supplementary Conditions identify:~~

~~1. those reports known to Owner relating to Hazardous Environmental Conditions that have been identified at or adjacent to the Site;~~

~~2. drawings known to Owner relating to Hazardous Environmental Conditions that have been identified at or adjacent to the Site; and~~

~~3. Technical Data contained in such reports and drawings.~~

B. *Reliance by Contractor on Technical Data Authorized*: Not Used ~~Contractor may rely upon the accuracy of the Technical Data expressly identified in the Supplementary Conditions with respect to such reports and drawings, but such reports and drawings are not Contract Documents. If no such express identification has been made, then Contractor may rely on the accuracy of the Technical Data as defined in Paragraph 1.01.A.46.b. Except for such reliance on Technical Data, Contractor may not rely upon or make any claim against Owner or Engineer, or any of their officers, directors, members, partners, employees, agents, consultants, or subcontractors, with respect to:~~

~~1. the completeness of such reports and drawings for Contractor's purposes, including, but not limited to, any aspects of the means, methods, techniques, sequences and procedures of construction to be employed by Contractor, and safety precautions and programs incident thereto;~~

~~2. other data, interpretations, opinions, and information contained in such reports or shown or indicated in such drawings; or~~

~~3. any Contractor interpretation of or conclusion drawn from any Technical Data or any such other data, interpretations, opinions or information.~~

~~C. Contractor shall not be responsible for removing or remediating any Hazardous Environmental Condition encountered, uncovered, or revealed at the Site unless such removal or remediation is expressly identified in the Contract Documents to be within the scope of the Work.~~

~~D. Contractor shall be responsible for controlling, containing, and duly removing all Constituents of Concern brought to the Site by Contractor, Subcontractors, Suppliers, or anyone else for whom Contractor is responsible, and for any associated costs; and for the costs of removing and remediating any Hazardous Environmental Condition created by the presence of any such Constituents of Concern.~~

~~E. If Contractor encounters, uncovers, or reveals a Hazardous Environmental Condition whose removal or remediation is not expressly identified in the Contract Documents as being within the scope of the Work, or if Contractor or anyone for whom Contractor is responsible creates a Hazardous Environmental Condition, then Contractor shall immediately: (1) secure or otherwise isolate such condition; (2) stop all Work in connection with such condition and in any area affected thereby (except in an emergency as required by Paragraph 7.15); and (3) notify Owner and Engineer (and promptly thereafter confirm such notice in writing). Owner shall promptly consult with Engineer concerning the necessity for Owner to retain a qualified expert to evaluate such condition or take corrective action, if any. Promptly after consulting with Engineer, Owner shall take such actions as are necessary to permit Owner to timely~~

Copyright© 2018 National Society of Professional Engineers, American Council of Engineering Companies, and American Society of Civil Engineers. All rights reserved.

~~obtain required permits and provide Contractor the written notice required by Paragraph 5.06.F. If Contractor or anyone for whom Contractor is responsible created the Hazardous Environmental Condition in question, then Owner may remove and remediate the Hazardous Environmental Condition, and impose a set-off against payments to account for the associated costs.~~

~~F. Contractor shall not resume Work in connection with such Hazardous Environmental Condition or in any affected area until after Owner has obtained any required permits related thereto, and delivered written notice to Contractor either (1) specifying that such condition and any affected area is or has been rendered safe for the resumption of Work, or (2) specifying any special conditions under which such Work may be resumed safely.~~

~~G. If Owner and Contractor cannot agree as to entitlement to or on the amount or extent, if any, of any adjustment in Contract Price or Contract Times, as a result of such Work stoppage, such special conditions under which Work is agreed to be resumed by Contractor, or any costs or expenses incurred in response to the Hazardous Environmental Condition, then within 30 days of Owner's written notice regarding the resumption of Work, Contractor may submit a Change Proposal, or Owner may impose a set-off. Entitlement to any such adjustment is subject to the provisions of Paragraphs 4.05.D, 4.05.E, 11.07, and 11.08.~~

~~H. If, after receipt of such written notice, Contractor does not agree to resume such Work based on a reasonable belief it is unsafe, or does not agree to resume such Work under such special conditions, then Owner may order the portion of the Work that is in the area affected by such condition to be deleted from the Work, following the contractual change procedures in Article 11. Owner may have such deleted portion of the Work performed by Owner's own forces or others in accordance with Article 8.~~

~~I. To the fullest extent permitted by Laws and Regulations, Owner shall indemnify and hold harmless Contractor, Subcontractors, and Engineer, and the officers, directors, members, partners, employees, agents, consultants, and subcontractors of each and any of them, from and against all claims, costs, losses, and damages (including but not limited to all fees and charges of engineers, architects, attorneys, and other professionals, and all court, arbitration, or other dispute resolution costs) arising out of or relating to a Hazardous Environmental Condition, provided that such Hazardous Environmental Condition (1) was not shown or indicated in the Drawings, Specifications, or other Contract Documents, identified as Technical Data entitled to limited reliance pursuant to Paragraph 5.06.B, or identified in the Contract Documents to be included within the scope of the Work, and (2) was not created by Contractor or by anyone for whom Contractor is responsible. Nothing in this Paragraph 5.06.I obligates Owner to indemnify any individual or entity from and against the consequences of that individual's or entity's own negligence.~~

~~J. To the fullest extent permitted by Laws and Regulations, Contractor shall indemnify and hold harmless Owner and Engineer, and the officers, directors, members, partners, employees, agents, consultants, and subcontractors of each and any of them, from and against all claims, costs, losses, and damages (including but not limited to all fees and charges of engineers, architects, attorneys, and other professionals and all court or arbitration or other dispute resolution costs) arising out of or relating to the failure to control, contain, or remove a Constituent of Concern brought to the Site by Contractor or by anyone for whom Contractor is responsible, or to a Hazardous Environmental Condition created by Contractor or by anyone for whom Contractor is responsible. Nothing in this Paragraph 5.06.J obligates Contractor to~~

Copyright© 2018 National Society of Professional Engineers, American Council of Engineering Companies, and American Society of Civil Engineers. All rights reserved.

~~indemnify any individual or entity from and against the consequences of that individual's or entity's own negligence.~~

~~K. The provisions of Paragraphs 5.03, 5.04, and 5.05 do not apply to the presence of Constituents of Concern or to a Hazardous Environmental Condition uncovered or revealed at the Site.~~

L. Discovery of cultural, historical, or archaeological resources shall require Contractor to immediately stop work in the affected area and notify the Engineer and Owner. Work shall not resume until authorized by the Owner and regulatory authorities.

ARTICLE 6—BONDS AND INSURANCE

6.01 *Performance, Payment, and Other Bonds*

A. Contractor shall furnish a performance bond and a payment bond, each in an amount at least equal to the Contract Price, as security for the faithful performance and payment of Contractor's obligations under the Contract. These bonds must remain in effect until one year after the date when final payment becomes due or until completion of the correction period specified in Paragraph 15.08, whichever is later, except as provided otherwise by Laws or Regulations, the terms of a prescribed bond form, ~~the Supplementary Conditions,~~ or other provisions of the Contract.

1. *Required Performance Bond Form:* The performance bond that Contractor furnishes will be in the form of EJCDC® C-610, Performance Bond (2018 edition).

2. *Required Payment Bond Form:* The payment bond that Contractor furnishes will be in the form of EJCDC® C-615, Payment Bond (2018 edition).

B. Contractor shall also furnish such other bonds (if any) as are required by ~~the Supplementary Conditions or~~ other provisions of the Contract.

C. All bonds must be in the form included in the Bidding Documents or otherwise specified by Owner prior to execution of the Contract, except as provided otherwise by Laws or Regulations, and must be issued and signed by a surety named in "Companies Holding Certificates of Authority as Acceptable Sureties on Federal Bonds and as Acceptable Reinsuring Companies" as published in Department Circular 570 (as amended and supplemented) by the Bureau of the Fiscal Service, U.S. Department of the Treasury. A bond signed by an agent or attorney-in-fact must be accompanied by a certified copy of that individual's authority to bind the surety. The evidence of authority must show that it is effective on the date the agent or attorney-in-fact signed the accompanying bond.

D. Contractor shall obtain the required bonds from surety companies that are duly licensed or authorized, in the state or jurisdiction in which the Project is located, to issue bonds in the required amounts.

E. If the surety on a bond furnished by Contractor is declared bankrupt or becomes insolvent, or the surety ceases to meet the requirements above, then Contractor shall promptly notify Owner and Engineer in writing and shall, within 20 days after the event giving rise to such notification, provide another bond and surety, both of which must comply with the bond and surety requirements above.

F. If Contractor has failed to obtain a required bond, Owner may exclude the Contractor from the Site and exercise Owner's termination rights under Article 16.

Copyright© 2018 National Society of Professional Engineers, American Council of Engineering Companies, and American Society of Civil Engineers. All rights reserved.

G. Upon request to Owner from any Subcontractor, Supplier, or other person or entity claiming to have furnished labor, services, materials, or equipment used in the performance of the Work, Owner shall provide a copy of the payment bond to such person or entity.

H. Upon request to Contractor from any Subcontractor, Supplier, or other person or entity claiming to have furnished labor, services, materials, or equipment used in the performance of the Work, Contractor shall provide a copy of the payment bond to such person or entity.

I. Performance and Payment Bonds shall remain in effect until all SRF program requirements related to construction are satisfied.

6.02 *Insurance—General Provisions*

A. Owner and Contractor shall obtain and maintain insurance as required in this article~~ and in the Supplementary Conditions~~.

B. All insurance required by the Contract to be purchased and maintained by Owner or Contractor shall be obtained from insurance companies that are duly licensed or authorized in the state or jurisdiction in which the Project is located to issue insurance policies for the required limits and coverages. ~~Unless a different standard is indicated in the Supplementary Conditions, a~~All companies that provide insurance policies required under this Contract shall have an A.M. Best rating of A-VII or better.

C. Alternative forms of insurance coverage, including but not limited to self-insurance and "Occupational Accident and Excess Employer's Indemnity Policies," are not sufficient to meet the insurance requirements of this Contract~~, unless expressly allowed in the Supplementary Conditions~~.

D. Contractor shall deliver to Owner, with copies to each additional insured identified in the Contract, certificates of insurance and endorsements establishing that Contractor has obtained and is maintaining the policies and coverages required by the Contract. Upon request by Owner or any other insured, Contractor shall also furnish other evidence of such required insurance, including but not limited to copies of policies, documentation of applicable self-insured retentions (if allowed) and deductibles, full disclosure of all relevant exclusions, and evidence of insurance required to be purchased and maintained by Subcontractors or Suppliers. In any documentation furnished under this provision, Contractor, Subcontractors, and Suppliers may block out (redact) (1) any confidential premium or pricing information and (2) any wording specific to a project or jurisdiction other than those applicable to this Contract.

E. Owner shall deliver to Contractor, with copies to each additional insured identified in the Contract, certificates of insurance and endorsements establishing that Owner has obtained and is maintaining the policies and coverages required of Owner by the Contract (if any). Upon request by Contractor or any other insured, Owner shall also provide other evidence of such required insurance (if any), including but not limited to copies of policies, documentation of applicable self-insured retentions (if allowed) and deductibles, and full disclosure of all relevant exclusions. In any documentation furnished under this provision, Owner may block out (redact) (1) any confidential premium or pricing information and (2) any wording specific to a project or jurisdiction other than those relevant to this Contract.

F. Failure of Owner or Contractor to demand such certificates or other evidence of the other party's full compliance with these insurance requirements, or failure of Owner or Contractor

Copyright© 2018 National Society of Professional Engineers, American Council of Engineering Companies, and American Society of Civil Engineers. All rights reserved.

to identify a deficiency in compliance from the evidence provided, will not be construed as a waiver of the other party's obligation to obtain and maintain such insurance.

G. In addition to the liability insurance required to be provided by Contractor, the Owner, at Owner's option, may purchase and maintain Owner's own liability insurance. Owner's liability policies, if any, operate separately and independently from policies required to be provided by Contractor, and Contractor cannot rely upon Owner's liability policies for any of Contractor's obligations to the Owner, Engineer, or third parties.

H. Contractor shall require:

1. Subcontractors to purchase and maintain worker's compensation, commercial general liability, and other insurance that is appropriate for their participation in the Project, and to name as additional insureds Owner and Engineer (and any other individuals or entities ~~identified in the Supplementary Conditions~~ as additional insureds on Contractor's liability policies) on each Subcontractor's commercial general liability insurance policy; and

2. Suppliers to purchase and maintain insurance that is appropriate for their participation in the Project.

I. If either party does not purchase or maintain the insurance required of such party by the Contract, such party shall notify the other party in writing of such failure to purchase prior to the start of the Work, or of such failure to maintain prior to any change in the required coverage.

J. If Contractor has failed to obtain and maintain required insurance, Contractor's entitlement to enter or remain at the Site will end immediately, and Owner may impose an appropriate set-off against payment for any associated costs (including but not limited to the cost of purchasing necessary insurance coverage), and exercise Owner's termination rights under Article 16.

K. Without prejudice to any other right or remedy, if a party has failed to obtain required insurance, the other party may elect (but is in no way obligated) to obtain equivalent insurance to protect such other party's interests at the expense of the party who was required to provide such coverage, and the Contract Price will be adjusted accordingly.

L. Owner does not represent that insurance coverage and limits established in this Contract necessarily will be adequate to protect Contractor or Contractor's interests. Contractor is responsible for determining whether such coverage and limits are adequate to protect its interests, and for obtaining and maintaining any additional insurance that Contractor deems necessary.

M. The insurance and insurance limits required herein will not be deemed as a limitation on Contractor's liability, or that of its Subcontractors or Suppliers, under the indemnities granted to Owner and other individuals and entities in the Contract or otherwise.

N. All the policies of insurance required to be purchased and maintained under this Contract will contain a provision or endorsement that the coverage afforded will not be canceled, or renewal refused, until at least 10 days prior written notice has been given to the purchasing policyholder. Within three days of receipt of any such written notice, the purchasing policyholder shall provide a copy of the notice to each other insured and Engineer.

Copyright© 2018 National Society of Professional Engineers, American Council of Engineering Companies, and American Society of Civil Engineers. All rights reserved.

6.03 *Contractor's Insurance*

A. *Required Insurance*: Contractor shall purchase and maintain Worker's Compensation, Commercial General Liability, and other insurance pursuant to the specific requirements of ~~the Supplementary Conditions~~.

B. *General Provisions*: The policies of insurance required by this Paragraph 6.03 as supplemented must:

1. include at least the specific coverages required;
2. be written for not less than the limits provided, or those required by Laws or Regulations, whichever is greater;
3. remain in effect at least until the Work is complete (as set forth in Paragraph 15.06.D), and longer if expressly required elsewhere in this Contract, and at all times thereafter when Contractor may be correcting, removing, or replacing defective Work as a warranty or correction obligation, or otherwise, or returning to the Site to conduct other tasks arising from the Contract;
4. apply with respect to the performance of the Work, whether such performance is by Contractor, any Subcontractor or Supplier, or by anyone directly or indirectly employed by any of them to perform any of the Work, or by anyone for whose acts any of them may be liable; and
5. include all necessary endorsements to support the stated requirements.

C. The limits of liability for the insurance required by Paragraph 6.03 of the General Conditions shall provide coverage for not less than the following amounts or greater where required by Laws and Regulations:

1. Workers' Compensation, and related coverages under Paragraphs 6.03.A.1 and A.2 of the General Conditions:

State:		Statutory
Federal, if applicable (e.g., Longshoreman's):		Statutory
Jones Act coverage, if applicable:		
Bodily injury by accident, each accident	$	1,000,000
Bodily injury by disease, aggregate	$	1,000,000
Employer's Liability:		
Bodily injury, each accident	$	100,000
Bodily injury by disease, each employee	$	100,000
Bodily injury/disease aggregate	$	500,000
Foreign voluntary worker compensation		Statutory

Copyright© 2018 National Society of Professional Engineers, American Council of Engineering Companies, and American Society of Civil Engineers. All rights reserved.

2. Contractor's Commercial General Liability under Paragraphs 6.03.B and 6.03.C of the General Conditions:

General Aggregate	$	2,000,000
Products - Completed Operations Aggregate	$	1,000,000
Personal and Advertising Injury	$	1,000,000
Each Occurrence (Bodily Injury and Property Damage)	$	1,000,000

3. Automobile Liability under Paragraph 6.03.D. of the General Conditions:

Bodily Injury:

Each person	$	1,000,000
Each accident	$	1,000,000

Property Damage:

Each accident	$	1,000,000

4. Excess or Umbrella Liability:

Per Occurrence	$	5,000,000
General Aggregate	$	5,000,000

5. Contractor's Pollution Liability:

Each Occurrence	$	1,000,000
General Aggregate	$	1,000,000

☒ If box is checked, Contractor is not required to provide Contractor's Pollution Liability insurance under this Contract

6. Additional Insureds: Owner and Engineer

7. Contractor's Professional Liability:

Each Claim	$	N/A

Copyright© 2018 National Society of Professional Engineers, American Council of Engineering Companies, and American Society of Civil Engineers. All rights reserved.

Annual Aggregate	$ N/A

8. *Waiver of Subrogation – Illinois Alluvial Regional Water Company, Inc. and MECO-Heneghan Engineers, LLC. shall be additional insured on a direct primary basis on the Waiver of Subrogation.*

D. *Additional Insureds*: The Contractor's commercial general liability, automobile liability, employer's liability, umbrella or excess, pollution liability, and unmanned aerial vehicle liability policies, if required by this Contract, must:

1. include and list as additional insureds Owner and Engineer, and any individuals or entities identified as additional insureds ~~in the Supplementary Conditions~~;
2. include coverage for the respective officers, directors, members, partners, employees, and consultants of all such additional insureds;
3. afford primary coverage to these additional insureds for all claims covered thereby (including as applicable those arising from both ongoing and completed operations);
4. not seek contribution from insurance maintained by the additional insured; and
5. as to commercial general liability insurance, apply to additional insureds with respect to liability caused in whole or in part by Contractor's acts or omissions, or the acts and omissions of those working on Contractor's behalf, in the performance of Contractor's operations.

6.04 *Builder's Risk and Other Property Insurance*

A. *Builder's Risk*: ~~Unless otherwise provided in the Supplementary Conditions,~~ Contractor shall purchase and maintain builder's risk insurance upon the Work on a completed value basis, in the amount of the Work's full insurable replacement cost (subject to such deductible amounts as may be provided ~~in the Supplementary Conditions~~ or required by Laws and Regulations). ~~The specific requirements applicable to the builder's risk insurance are set forth in the Supplementary Conditions~~.

B. *Property Insurance for Facilities of Owner Where Work Will Occur*: Owner is responsible for obtaining and maintaining property insurance covering each existing structure, building, or facility in which any part of the Work will occur, or to which any part of the Work will attach or be adjoined. Such property insurance will be written on a special perils (all-risk) form, on a replacement cost basis, providing coverage consistent with that required for the builder's risk insurance, and will be maintained until the Work is complete, as set forth in Paragraph 15.06.D.

C. *Property Insurance for Substantially Complete Facilities*: Promptly after Substantial Completion, and before actual occupancy or use of the substantially completed Work, Owner will obtain property insurance for such substantially completed Work, and maintain such property insurance at least until the Work is complete, as set forth in Paragraph 15.06.D. Such property insurance will be written on a special perils (all-risk) form, on a replacement cost basis, and provide coverage consistent with that required for the builder's risk insurance. The builder's risk insurance may terminate upon written confirmation of Owner's procurement of such property insurance.

Copyright© 2018 National Society of Professional Engineers, American Council of Engineering Companies, and American Society of Civil Engineers. All rights reserved.

D. *Partial Occupancy or Use by Owner*: If Owner will occupy or use a portion or portions of the Work prior to Substantial Completion of all the Work, as provided in Paragraph 15.04, then Owner (directly, if it is the purchaser of the builder's risk policy, or through Contractor) will provide advance notice of such occupancy or use to the builder's risk insurer, and obtain an endorsement consenting to the continuation of coverage prior to commencing such partial occupancy or use.

E. *Insurance of Other Property; Additional Insurance*: If the express insurance provisions of the Contract do not require or address the insurance of a property item or interest, then the entity or individual owning such property item will be responsible for insuring it. If Contractor elects to obtain other special insurance to be included in or supplement the builder's risk or property insurance policies provided under this Paragraph 6.04, it may do so at Contractor's expense.

6.05 *Property Losses; Subrogation*

A. The builder's risk insurance policy purchased and maintained in accordance with Paragraph 6.04 (or an installation floater policy if authorized~~ by the Supplementary Conditions~~), will contain provisions to the effect that in the event of payment of any loss or damage the insurer will have no rights of recovery against any insureds thereunder, or against Engineer or its consultants, or their officers, directors, members, partners, employees, agents, consultants, or subcontractors.

1. Owner and Contractor waive all rights against each other and the respective officers, directors, members, partners, employees, agents, consultants, and subcontractors of each and any of them, for all losses and damages caused by, arising out of, or resulting from any of the perils, risks, or causes of loss covered by such policies and any other property insurance applicable to the Work; and, in addition, waive all such rights against Engineer, its consultants, all individuals or entities identified ~~in the Supplementary Conditions~~ as builder's risk or installation floater insureds, and the officers, directors, members, partners, employees, agents, consultants, and subcontractors of each and any of them, under such policies for losses and damages so caused.

2. None of the above waivers extends to the rights that any party making such waiver may have to the proceeds of insurance held by Owner or Contractor as trustee or fiduciary, or otherwise payable under any policy so issued.

B. Any property insurance policy maintained by Owner covering any loss, damage, or consequential loss to Owner's existing structures, buildings, or facilities in which any part of the Work will occur, or to which any part of the Work will attach or adjoin; to adjacent structures, buildings, or facilities of Owner; or to part or all of the completed or substantially completed Work, during partial occupancy or use pursuant to Paragraph 15.04, after Substantial Completion pursuant to Paragraph 15.03, or after final payment pursuant to Paragraph 15.06, will contain provisions to the effect that in the event of payment of any loss or damage the insurer will have no rights of recovery against any insureds thereunder, or against Contractor, Subcontractors, or Engineer, or the officers, directors, members, partners, employees, agents, consultants, or subcontractors of each and any of them, and that the insured is allowed to waive the insurer's rights of subrogation in a written contract executed prior to the loss, damage, or consequential loss.

1. Owner waives all rights against Contractor, Subcontractors, and Engineer, and the officers, directors, members, partners, employees, agents, consultants and

Copyright© 2018 National Society of Professional Engineers, American Council of Engineering Companies, and American Society of Civil Engineers. All rights reserved.

subcontractors of each and any of them, for all losses and damages caused by, arising out of, or resulting from fire or any of the perils, risks, or causes of loss covered by such policies.

C. The waivers in this Paragraph 6.05 include the waiver of rights due to business interruption, loss of use, or other consequential loss extending beyond direct physical loss or damage to Owner's property or the Work caused by, arising out of, or resulting from fire or other insured peril, risk, or cause of loss.

D. Contractor shall be responsible for assuring that each Subcontract contains provisions whereby the Subcontractor waives all rights against Owner, Contractor, all individuals or entities ~~identified in the Supplementary Conditions~~ as insureds, the Engineer and its consultants, and the officers, directors, members, partners, employees, agents, consultants, and subcontractors of each and any of them, for all losses and damages caused by, arising out of, relating to, or resulting from fire or other peril, risk, or cause of loss covered by builder's risk insurance, installation floater, and any other property insurance applicable to the Work.

6.06 *Receipt and Application of Property Insurance Proceeds*

A. Any insured loss under the builder's risk and other policies of property insurance required by Paragraph 6.04 will be adjusted and settled with the named insured that purchased the policy. Such named insured shall act as fiduciary for the other insureds, and give notice to such other insureds that adjustment and settlement of a claim is in progress. Any other insured may state its position regarding a claim for insured loss in writing within 15 days after notice of such claim.

B. Proceeds for such insured losses may be made payable by the insurer either jointly to multiple insureds, or to the named insured that purchased the policy in its own right and as fiduciary for other insureds, subject to the requirements of any applicable mortgage clause. A named insured receiving insurance proceeds under the builder's risk and other policies of insurance required by Paragraph 6.04 shall maintain such proceeds in a segregated account, and distribute such proceeds in accordance with such agreement as the parties in interest may reach, or as otherwise required under the dispute resolution provisions of this Contract or applicable Laws and Regulations.

C. If no other special agreement is reached, Contractor shall repair or replace the damaged Work, using allocated insurance proceeds.

ARTICLE 7—CONTRACTOR'S RESPONSIBILITIES

7.01 *Contractor's Means and Methods of Construction*

A. Contractor shall be solely responsible for the means, methods, techniques, sequences, and procedures of construction.

B. If the Contract Documents note, or Contractor determines, that professional engineering or other design services are needed to carry out Contractor's responsibilities for construction means, methods, techniques, sequences, and procedures, or for Site safety, then Contractor shall cause such services to be provided by a properly licensed design professional, at Contractor's expense. Such services are not Owner-delegated professional design services under this Contract, and neither Owner nor Engineer has any responsibility with respect to (1) Contractor's determination of the need for such services, (2) the qualifications or licensing

Copyright© 2018 National Society of Professional Engineers, American Council of Engineering Companies, and American Society of Civil Engineers. All rights reserved.

of the design professionals retained or employed by Contractor, (3) the performance of such services, or (4) any errors, omissions, or defects in such services.

7.02 *Supervision and Superintendence*

A. Contractor shall supervise, inspect, and direct the Work competently and efficiently, devoting such attention thereto and applying such skills and expertise as may be necessary to perform the Work in accordance with the Contract Documents.

B. At all times during the progress of the Work, Contractor shall assign a competent resident superintendent who will not be replaced without written notice to Owner and Engineer except under extraordinary circumstances.

7.03 *Labor; Working Hours*

A. Contractor shall provide competent, suitably qualified personnel to survey and lay out the Work and perform construction as required by the Contract Documents. Contractor shall maintain good discipline and order at the Site.

B. Contractor shall be fully responsible to Owner and Engineer for all acts and omissions of Contractor's employees; of Suppliers and Subcontractors, and their employees; and of any other individuals or entities performing or furnishing any of the Work, just as Contractor is responsible for Contractor's own acts and omissions.

C. Except as otherwise required for the safety or protection of persons or the Work or property at the Site or adjacent thereto, and except as otherwise stated in the Contract Documents, all Work at the Site will be performed during regular working hours, Monday through Friday. Contractor will not perform Work on a Saturday, Sunday, or any legal holiday. Contractor may perform Work outside regular working hours or on Saturdays, Sundays, or legal holidays only with Owner's written consent, which will not be unreasonably withheld.

D. Contractor shall be responsible for the cost of any overtime pay or other expense incurred by the Owner for Engineer's services (including those of the Resident Project Representative, if any), Owner's representative, and construction observation services, occasioned by the performance of Work on Saturday, Sunday, any legal holiday, or as overtime on any regular work day. If Contractor is responsible but does not pay, or if the parties are unable to agree as to the amount owed, then Owner may impose a reasonable set-off against payments under Article 15.

E. Contractor shall comply with the Davis-Bacon Act and related federal labor standards provisions applicable to SRF funded construction projects.

F. Contractor and all subcontractors shall pay laborers and mechanics wages not less than those contained in the wage determination included in the Contract Documents.

G. Contractor shall submit weekly certified payroll reports to the Owner or Engineer.

7.04 *Services, Materials, and Equipment*

A. Unless otherwise specified in the Contract Documents, Contractor shall provide and assume full responsibility for all services, materials, equipment, labor, transportation, construction equipment and machinery, tools, appliances, fuel, power, light, heat, telephone, water, sanitary facilities, temporary facilities, and all other facilities and incidentals necessary for the performance, testing, start up, and completion of the Work, whether or not such items are specifically called for in the Contract Documents.

Copyright© 2018 National Society of Professional Engineers, American Council of Engineering Companies, and American Society of Civil Engineers. All rights reserved.

B. All materials and equipment incorporated into the Work must be new and of good quality, except as otherwise provided in the Contract Documents. All special warranties and guarantees required by the Specifications will expressly run to the benefit of Owner. If required by Engineer, Contractor shall furnish satisfactory evidence (including reports of required tests) as to the source, kind, and quality of materials and equipment.

C. All materials and equipment must be stored, applied, installed, connected, erected, protected, used, cleaned, and conditioned in accordance with instructions of the applicable Supplier, except as otherwise may be provided in the Contract Documents.

7.05 *"Or Equals"*

A. *Contractor's Request; Governing Criteria*: Whenever an item of equipment or material is specified or described in the Contract Documents by using the names of one or more proprietary items or specific Suppliers, the Contract Price has been based upon Contractor furnishing such item as specified. The specification or description of such an item is intended to establish the type, function, appearance, and quality required. ~~Unless the specification or description contains or is followed by words reading that no like, equivalent, or "or equal" item is permitted,~~ Contractor may request that Engineer authorize the use of other items of equipment or material, or items from other proposed Suppliers, under the circumstances described below.

1. If Engineer in its sole discretion determines that an item of equipment or material proposed by Contractor is functionally equal to that named and sufficiently similar so that no change in related Work will be required, Engineer will deem it an "or equal" item. For the purposes of this paragraph, a proposed item of equipment or material will be considered functionally equal to an item so named if:

a. in the exercise of reasonable judgment Engineer determines that the proposed item:

1) is at least equal in materials of construction, quality, durability, appearance, strength, and design characteristics;

2) will reliably perform at least equally well the function and achieve the results imposed by the design concept of the completed Project as a functioning whole;

3) has a proven record of performance and availability of responsive service.~~; and~~

4) [Deleted] ~~is not objectionable to Owner.~~

5) Must be compatible with existing components and equipment.

b. Contractor certifies that, if the proposed item is approved and incorporated into the Work:

1) there will be no increase in cost to the Owner or increase in Contract Times; and

2) the item will conform substantially to the detailed requirements of the item named in the Contract Documents.

B. *Contractor's Expense*: Contractor shall provide all data in support of any proposed "or equal" item at Contractor's expense.

C. *Engineer's Evaluation and Determination*: Engineer will be allowed a reasonable time to evaluate each "or-equal" request. Engineer may require Contractor to furnish additional data about the proposed "or-equal" item. Engineer will be the sole judge of acceptability. No "or-

Copyright© 2018 National Society of Professional Engineers, American Council of Engineering Companies, and American Society of Civil Engineers. All rights reserved.

equal" item will be ordered, furnished, installed, or utilized until Engineer's review is complete and Engineer determines that the proposed item is an "or-equal," which will be evidenced by an approved Shop Drawing or other written communication. Engineer will advise Contractor in writing of any negative determination.

D. *Effect of Engineer's Determination*: Neither approval nor denial of an "or-equal" request will result in any change in Contract Price. The Engineer's denial of an "or-equal" request will be final and binding, and may not be reversed through an appeal under any provision of the Contract.

E. *Treatment as a Substitution Request*: If Engineer determines that an item of equipment or material proposed by Contractor does not qualify as an "or-equal" item, Contractor may request that Engineer consider the item a proposed substitute pursuant to Paragraph 7.06.

F. Materials used in the Project shall comply with Build America Buy America Act requirements when applicable. Contractor shall provide documentation verifying domestic sourcing of covered products.

7.06 *Substitutes*

A. *Contractor's Request; Governing Criteria*: Unless the specification or description of an item of equipment or material required to be furnished under the Contract Documents contains or is followed by words reading that no substitution is permitted, Contractor may request that Engineer authorize the use of other items of equipment or material under the circumstances described below. To the extent possible such requests must be made before commencement of related construction at the Site.

1. Contractor shall submit sufficient information as provided below to allow Engineer to determine if the item of material or equipment proposed is functionally equivalent to that named and an acceptable substitute therefor. Engineer will not accept requests for review of proposed substitute items of equipment or material from anyone other than Contractor.

2. The requirements for review by Engineer will be as set forth in Paragraph 7.06.B, ~~as supplemented by the Specifications,~~ and as Engineer may decide is appropriate under the circumstances.

3. Contractor shall make written application to Engineer for review of a proposed substitute item of equipment or material that Contractor seeks to furnish or use. The application:

a. will certify that the proposed substitute item will:

1) perform adequately the functions and achieve the results called for by the general design;

2) be similar in substance to the item specified; and

3) be suited to the same use as the item specified

b. will state:

1) the extent, if any, to which the use of the proposed substitute item will necessitate a change in Contract Times;

2) whether use of the proposed substitute item in the Work will require a change in any of the Contract Documents (or in the provisions of any other direct contract

Copyright© 2018 National Society of Professional Engineers, American Council of Engineering Companies, and American Society of Civil Engineers. All rights reserved.

with Owner for other work on the Project) to adapt the design to the proposed substitute item; and

3) whether incorporation or use of the proposed substitute item in connection with the Work is subject to payment of any license fee or royalty.

c. will identify:

1) all variations of the proposed substitute item from the item specified; and

2) available engineering, sales, maintenance, repair, and replacement services.

d. will contain an itemized estimate of all costs or credits that will result directly or indirectly from use of such substitute item, including but not limited to changes in Contract Price, shared savings, costs of redesign, and claims of other contractors affected by any resulting change.

B. *Engineer's Evaluation and Determination*: Engineer will be allowed a reasonable time to evaluate each substitute request, and to obtain comments and direction from Owner. Engineer may require Contractor to furnish additional data about the proposed substitute item. Engineer will be the sole judge of acceptability. No substitute will be ordered, furnished, installed, or utilized until Engineer's review is complete and Engineer determines that the proposed item is an acceptable substitute. Engineer's determination will be evidenced by a Field Order or a proposed Change Order accounting for the substitution itself and all related impacts, including changes in Contract Price or Contract Times. Engineer will advise Contractor in writing of any negative determination.

C. *Special Guarantee*: Owner may require Contractor to furnish at Contractor's expense a special performance guarantee or other surety with respect to any substitute.

D. *Reimbursement of Engineer's Cost*: Engineer will record Engineer's costs in evaluating a substitute proposed or submitted by Contractor. Whether or not Engineer approves a substitute so proposed or submitted by Contractor, Contractor shall reimburse Owner for the reasonable charges of Engineer for evaluating each such proposed substitute. Contractor shall also reimburse Owner for the reasonable charges of Engineer for making changes in the Contract Documents (or in the provisions of any other direct contract with Owner) resulting from the acceptance of each proposed substitute.

E. *Contractor's Expense*: Contractor shall provide all data in support of any proposed substitute at Contractor's expense.

F. *Effect of Engineer's Determination*: If Engineer approves the substitution request, Contractor shall execute the proposed Change Order and proceed with the substitution. The Engineer's denial of a substitution request will be final and binding, and may not be reversed through an appeal under any provision of the Contract. Contractor may challenge the scope of reimbursement costs imposed under Paragraph 7.06.D, by timely submittal of a Change Proposal.

7.07 *Concerning Subcontractors and Suppliers*

A. Contractor may retain Subcontractors and Suppliers for the performance of parts of the Work. Such Subcontractors and Suppliers must be acceptable to Owner. The Contractor's retention of a Subcontractor or Supplier for the performance of parts of the Work will not relieve

Copyright© 2018 National Society of Professional Engineers, American Council of Engineering Companies, and American Society of Civil Engineers. All rights reserved.

Contractor's obligation to Owner to perform and complete the Work in accordance with the Contract Documents.

B. Contractor shall retain specific Subcontractors and Suppliers for the performance of designated parts of the Work if required by the Contract to do so.

C. Subsequent to the submittal of Contractor's Bid or final negotiation of the terms of the Contract, Owner may not require Contractor to retain any Subcontractor or Supplier to furnish or perform any of the Work against which Contractor has reasonable objection.

D. Prior to entry into any binding subcontract or purchase order, Contractor shall submit to Owner the identity of the proposed Subcontractor or Supplier (unless Owner has already deemed such proposed Subcontractor or Supplier acceptable during the bidding process or otherwise). Such proposed Subcontractor or Supplier shall be deemed acceptable to Owner unless Owner raises a substantive, reasonable objection within 5 days.

E. Owner may require the replacement of any Subcontractor or Supplier. ~~Owner also may require Contractor to retain specific replacements; provided, however, that~~ **Owner may not require a replacement that has a reasonable objection.** If Contractor has submitted the identity of certain Subcontractors or Suppliers for acceptance by Owner, and Owner has accepted it (either in writing or by failing to make written objection thereto), then Owner may subsequently revoke the acceptance of any such Subcontractor or Supplier so identified solely on the basis of substantive, reasonable objection after due investigation. Contractor shall submit an acceptable replacement for the rejected Subcontractor or Supplier.

F. If Owner requires the replacement of any Subcontractor or Supplier retained by Contractor to perform any part of the Work, then Contractor shall be entitled to an adjustment in Contract Price or Contract Times, with respect to the replacement; and Contractor shall initiate a Change Proposal for such adjustment within 30 days of Owner's requirement of replacement.

G. No acceptance by Owner of any such Subcontractor or Supplier, whether initially or as a replacement, will constitute a waiver of the right of Owner to the completion of the Work in accordance with the Contract Documents.

H. On a monthly basis, Contractor shall submit to Engineer a complete list of all Subcontractors and Suppliers having a direct contract with Contractor, and of all other Subcontractors and Suppliers known to Contractor at the time of submittal.

I. Contractor shall be solely responsible for scheduling and coordinating the work of Subcontractors and Suppliers.

J. The divisions and sections of the Specifications and the identifications of any Drawings do not control Contractor in dividing the Work among Subcontractors or Suppliers, or in delineating the Work to be performed by any specific trade.

K. All Work performed for Contractor by a Subcontractor or Supplier must be pursuant to an appropriate contractual agreement that specifically binds the Subcontractor or Supplier to the applicable terms and conditions of the Contract for the benefit of Owner and Engineer.

L. Owner may furnish to any Subcontractor or Supplier, to the extent practicable, information about amounts paid to Contractor for Work performed for Contractor by the Subcontractor or Supplier.

Copyright© 2018 National Society of Professional Engineers, American Council of Engineering Companies, and American Society of Civil Engineers. All rights reserved.

M. Contractor shall restrict all Subcontractors and Suppliers from communicating with Engineer or Owner, except through Contractor or in case of an emergency, or as otherwise expressly allowed in this Contract.

N. Contractor shall take affirmative steps to solicit participation from Disadvantaged Business Enterprises (DBEs) consistent with 40 CFR Part 33.

O. Contractor shall maintain documentation demonstrating good faith efforts and shall report DBE participation as required by the Owner or IEPA.

7.08 *Patent Fees and Royalties*

A. Contractor shall pay all license fees and royalties and assume all costs incident to the use in the performance of the Work or the incorporation in the Work of any invention, design, process, product, or device which is the subject of patent rights or copyrights held by others. If an invention, design, process, product, or device is specified in the Contract Documents for use in the performance of the Work and if, to the actual knowledge of Owner or Engineer, its use is subject to patent rights or copyrights calling for the payment of any license fee or royalty to others, the existence of such rights will be disclosed in the Contract Documents.

B. To the fullest extent permitted by Laws and Regulations, Owner shall indemnify and hold harmless Contractor, and its officers, directors, members, partners, employees, agents, consultants, and subcontractors, from and against all claims, costs, losses, and damages (including but not limited to all fees and charges of engineers, architects, attorneys, and other professionals, and all court or arbitration or other dispute resolution costs) arising out of or relating to any infringement of patent rights or copyrights incident to the use in the performance of the Work or resulting from the incorporation in the Work of any invention, design, process, product, or device specified in the Contract Documents, but not identified as being subject to payment of any license fee or royalty to others required by patent rights or copyrights.

C. To the fullest extent permitted by Laws and Regulations, Contractor shall indemnify and hold harmless Owner and Engineer, and the officers, directors, members, partners, employees, agents, consultants and subcontractors of each and any of them, from and against all claims, costs, losses, and damages (including but not limited to all fees and charges of engineers, architects, attorneys, and other professionals and all court or arbitration or other dispute resolution costs) arising out of or relating to any infringement of patent rights or copyrights incident to the use in the performance of the Work or resulting from the incorporation in the Work of any invention, design, process, product, or device not specified in the Contract Documents.

7.09 *Permits*

A. Unless otherwise provided in the Contract Documents, Contractor shall obtain and pay for all construction permits, licenses, and certificates of occupancy. Owner shall assist Contractor, when necessary, in obtaining such permits and licenses. Contractor shall pay all governmental charges and inspection fees necessary for the prosecution of the Work which are applicable at the time of the submission of Contractor's Bid (or when Contractor became bound under a negotiated contract). Owner shall pay all charges of utility owners for connections for providing permanent service to the Work.

Copyright© 2018 National Society of Professional Engineers, American Council of Engineering Companies, and American Society of Civil Engineers. All rights reserved.

7.10 *Taxes*

A. Contractor shall pay all sales, consumer, use, and other similar taxes required to be paid by Contractor in accordance with the Laws and Regulations of the place of the Project which are applicable during the performance of the Work.

B. Owner is exempt from payment of sales and compensating use taxes of the State of Illinois and of cities and counties thereof on all materials to be incorporated into the Work.

1. Owner will furnish the required certificates of tax exemption to Contractor for use in the purchase of supplies and materials to be incorporated into the Work.

2. Owner's exemption does not apply to construction tools, machinery, equipment, or other property purchased by or leased by the Contractor, or to supplies or materials not incorporated into the Work.

C. Contractor shall comply with all federal grant and loan requirements associated with the SRF program.

7.11 *Laws and Regulations*

A. Contractor shall give all notices required by and shall comply with all Laws and Regulations applicable to the performance of the Work. Neither Owner nor Engineer shall be responsible for monitoring Contractor's compliance with any Laws or Regulations.

B. If Contractor performs any Work or takes any other action knowing or having reason to know that it is contrary to Laws or Regulations, Contractor shall bear all resulting costs and losses, and shall indemnify and hold harmless Owner and Engineer, and the officers, directors, members, partners, employees, agents, consultants, and subcontractors of each and any of them, from and against all claims, costs, losses, and damages (including but not limited to all fees and charges of engineers, architects, attorneys, and other professionals and all court or arbitration or other dispute resolution costs) arising out of or relating to such Work or other action. It is not Contractor's responsibility to make certain that the Work described in the Contract Documents is in accordance with Laws and Regulations, but this does not relieve Contractor of its obligations under Paragraph 3.03.

C. Owner or Contractor may give written notice to the other party of any changes after the submission of Contractor's Bid (or after the date when Contractor became bound under a negotiated contract) in Laws or Regulations having an effect on the cost or time of performance of the Work, including but not limited to changes in Laws or Regulations having an effect on procuring permits and on sales, use, value-added, consumption, and other similar taxes. If Owner and Contractor are unable to agree on entitlement to or on the amount or extent, if any, of any adjustment in Contract Price or Contract Times resulting from such changes, then within 30 days of such written notice Contractor may submit a Change Proposal, or Owner may initiate a Claim.

7.12 *Record Documents*

A. Contractor shall maintain in a safe place at the Site one printed record copy of all Drawings, Specifications, Addenda, Change Orders, Work Change Directives, Field Orders, written interpretations and clarifications, and approved Shop Drawings. Contractor shall keep such record documents in good order and annotate them to show changes made during construction. These record documents, together with all approved Samples, will be available

Copyright© 2018 National Society of Professional Engineers, American Council of Engineering Companies, and American Society of Civil Engineers. All rights reserved.

to Engineer for reference. Upon completion of the Work, Contractor shall deliver these record documents to Engineer.

7.13 *Safety and Protection*

A. Contractor shall be solely responsible for initiating, maintaining, and supervising all safety precautions and programs in connection with the Work. Such responsibility does not relieve Subcontractors of their responsibility for the safety of persons or property in the performance of their work, nor for compliance with applicable safety Laws and Regulations.

B. Contractor shall designate a qualified and experienced safety representative whose duties and responsibilities are the prevention of Work-related accidents and the maintenance and supervision of safety precautions and programs.

C. Contractor shall take all necessary precautions for the safety of, and shall provide the necessary protection to prevent damage, injury, or loss to:

1. all persons on the Site or who may be affected by the Work;

2. all the Work and materials and equipment to be incorporated therein, whether in storage on or off the Site; and

3. other property at the Site or adjacent thereto, including trees, shrubs, lawns, walks, pavements, roadways, structures, other work in progress, utilities, and Underground Facilities not designated for removal, relocation, or replacement in the course of construction.

D. All damage, injury, or loss to any property referred to in Paragraph 7.13.C.2 or 7.13.C.3 caused, directly or indirectly, in whole or in part, by Contractor, any Subcontractor, Supplier, or any other individual or entity directly or indirectly employed by any of them to perform any of the Work, or anyone for whose acts any of them may be liable, shall be remedied by Contractor at its expense (except damage or loss attributable to the fault of Drawings or Specifications or to the acts or omissions of Owner or Engineer or anyone employed by any of them, or anyone for whose acts any of them may be liable, and not attributable, directly or indirectly, in whole or in part, to the fault or negligence of Contractor or any Subcontractor, Supplier, or other individual or entity directly or indirectly employed by any of them).

E. Contractor shall comply with all applicable Laws and Regulations relating to the safety of persons or property, or to the protection of persons or property from damage, injury, or loss; and shall erect and maintain all necessary safeguards for such safety and protection.

F. Contractor shall notify Owner; the owners of adjacent property; the owners of Underground Facilities and other utilities (if the identity of such owners is known to Contractor); and other contractors and utility owners performing work at or adjacent to the Site, in writing, when Contractor knows that prosecution of the Work may affect them, and shall cooperate with them in the protection, removal, relocation, and replacement of their property or work in progress.

G. Contractor shall comply with the applicable requirements of Owner's safety programs, if any. ~~Any Owner's safety programs that are applicable to the Work are identified or included in the Supplementary Conditions or Specifications.~~

Copyright© 2018 National Society of Professional Engineers, American Council of Engineering Companies, and American Society of Civil Engineers. All rights reserved.

H. Contractor shall inform Owner and Engineer of the specific requirements of Contractor's safety program with which Owner's and Engineer's employees and representatives must comply while at the Site.

I. Contractor's duties and responsibilities for safety and protection will continue until all the Work is completed, Engineer has issued a written notice to Owner and Contractor in accordance with Paragraph 15.06.C that the Work is acceptable, and Contractor has left the Site (except as otherwise expressly provided in connection with Substantial Completion).

J. Contractor's duties and responsibilities for safety and protection will resume whenever Contractor or any Subcontractor or Supplier returns to the Site to fulfill warranty or correction obligations, or to conduct other tasks arising from the Contract Documents.

7.14 *Hazard Communication Programs*

A. Contractor shall be responsible for coordinating any exchange of safety data sheets (formerly known as material safety data sheets) or other hazard communication information required to be made available to or exchanged between or among employers at the Site in accordance with Laws or Regulations.

7.15 *Emergencies*

A. In emergencies affecting the safety or protection of persons or the Work or property at the Site or adjacent thereto, Contractor is obligated to act to prevent damage, injury, or loss. Contractor shall give Engineer prompt written notice if Contractor believes that any significant changes in the Work or variations from the Contract Documents have been caused by an emergency, or are required as a result of Contractor's response to an emergency. If Engineer determines that a change in the Contract Documents is required because of an emergency or Contractor's response, a Work Change Directive or Change Order will be issued.

7.16 *Submittals*

A. *Shop Drawing and Sample Requirements*

1. Before submitting a Shop Drawing or Sample, Contractor shall:

a. review and coordinate the Shop Drawing or Sample with other Shop Drawings and Samples and with the requirements of the Work and the Contract Documents;

b. determine and verify:

1) all field measurements, quantities, dimensions, specified performance and design criteria, installation requirements, materials, catalog numbers, and similar information with respect to the Submittal;

2) the suitability of all materials and equipment offered with respect to the indicated application, fabrication, shipping, handling, storage, assembly, and installation pertaining to the performance of the Work; and

3) all information relative to Contractor's responsibilities for means, methods, techniques, sequences, and procedures of construction, and safety precautions and programs incident thereto;

c. confirm that the Submittal is complete with respect to all related data included in the Submittal.

Copyright© 2018 National Society of Professional Engineers, American Council of Engineering Companies, and American Society of Civil Engineers. All rights reserved.

2. Each Shop Drawing or Sample must bear a stamp or specific written certification that Contractor has satisfied Contractor's obligations under the Contract Documents with respect to Contractor's review of that Submittal, and that Contractor approves the Submittal.

3. With each Shop Drawing or Sample, Contractor shall give Engineer specific written notice of any variations that the Submittal may have from the requirements of the Contract Documents. This notice must be set forth in a written communication separate from the Submittal; and, in addition, in the case of a Shop Drawing by a specific notation made on the Shop Drawing itself.

B. *Submittal Procedures for Shop Drawings and Samples*: Contractor shall label and submit Shop Drawings and Samples to Engineer for review and approval in accordance with the accepted Schedule of Submittals.

1. *Shop Drawings*

a. Contractor shall submit the number of copies required in the Specifications.

b. Data shown on the Shop Drawings must be complete with respect to quantities, dimensions, specified performance and design criteria, materials, and similar data to show Engineer the services, materials, and equipment Contractor proposes to provide, and to enable Engineer to review the information for the limited purposes required by Paragraph 7.16.C.

2. *Samples*

a. Contractor shall submit the number of Samples required in the Specifications.

b. Contractor shall clearly identify each Sample as to material, Supplier, pertinent data such as catalog numbers, the use for which intended and other data as Engineer may require to enable Engineer to review the Submittal for the limited purposes required by Paragraph 7.16.C.

3. Where a Shop Drawing or Sample is required by the Contract Documents or the Schedule of Submittals, any related Work performed prior to Engineer's review and approval of the pertinent submittal will be at the sole expense and responsibility of Contractor.

C. *Engineer's Review of Shop Drawings and Samples*

1. Engineer will provide timely review of Shop Drawings and Samples in accordance with the accepted Schedule of Submittals. Engineer's review and approval will be only to determine if the items covered by the Submittals will, after installation or incorporation in the Work, comply with the requirements of the Contract Documents, and be compatible with the design concept of the completed Project as a functioning whole as indicated by the Contract Documents.

2. Engineer's review and approval will not extend to means, methods, techniques, sequences, or procedures of construction, or to safety precautions or programs incident thereto.

3. Engineer's review and approval of a separate item as such will not indicate approval of the assembly in which the item functions.

Copyright© 2018 National Society of Professional Engineers, American Council of Engineering Companies, and American Society of Civil Engineers. All rights reserved.

4. Engineer's review and approval of a Shop Drawing or Sample will not relieve Contractor from responsibility for any variation from the requirements of the Contract Documents unless Contractor has complied with the requirements of Paragraph 7.16.A.3 and Engineer has given written approval of each such variation by specific written notation thereof incorporated in or accompanying the Shop Drawing or Sample. Engineer will document any such approved variation from the requirements of the Contract Documents in a Field Order or other appropriate Contract modification.

5. Engineer's review and approval of a Shop Drawing or Sample will not relieve Contractor from responsibility for complying with the requirements of Paragraphs 7.16.A and B.

6. Engineer's review and approval of a Shop Drawing or Sample, or of a variation from the requirements of the Contract Documents, will not, under any circumstances, change the Contract Times or Contract Price, unless such changes are included in a Change Order.

7. Neither Engineer's receipt, review, acceptance, or approval of a Shop Drawing or Sample will result in such item becoming a Contract Document.

8. Contractor shall perform the Work in compliance with the requirements and commitments set forth in approved Shop Drawings and Samples, subject to the provisions of Paragraph 7.16.C.4.

D. *Resubmittal Procedures for Shop Drawings and Samples*

1. Contractor shall make corrections required by Engineer and shall return the required number of corrected copies of Shop Drawings and submit, as required, new Samples for review and approval. Contractor shall direct specific attention in writing to revisions other than the corrections called for by Engineer on previous Submittals.

2. Contractor shall furnish required Shop Drawing and Sample submittals with sufficient information and accuracy to obtain required approval of an item with no more than two resubmittals. Engineer will record Engineer's time for reviewing a third or subsequent resubmittal of a Shop Drawing or Sample, and Contractor shall be responsible for Engineer's charges to Owner for such time. Owner may impose a set-off against payments due Contractor to secure reimbursement for such charges.

3. If Contractor requests a change of a previously approved Shop Drawing or Sample, Contractor shall be responsible for Engineer's charges to Owner for its review time, and Owner may impose a set-off against payments due Contractor to secure reimbursement for such charges, unless the need for such change is beyond the control of Contractor.

E. *Submittals Other than Shop Drawings, Samples, and Owner-Delegated Designs*

1. The following provisions apply to all Submittals other than Shop Drawings, Samples, and Owner-delegated designs:

   a. Contractor shall submit all such Submittals to the Engineer in accordance with the Schedule of Submittals and pursuant to the applicable terms of the Contract Documents.

   b. Engineer will provide timely review of all such Submittals in accordance with the Schedule of Submittals and return such Submittals with a notation of either Accepted or Not Accepted. Any such Submittal that is not returned within the time established in the Schedule of Submittals will be deemed accepted.

Copyright© 2018 National Society of Professional Engineers, American Council of Engineering Companies, and American Society of Civil Engineers. All rights reserved.

c. Engineer's review will be only to determine if the Submittal is acceptable under the requirements of the Contract Documents as to general form and content of the Submittal.

d. If any such Submittal is not accepted, Contractor shall confer with Engineer regarding the reason for the non-acceptance, and resubmit an acceptable document.

2. Procedures for the submittal and acceptance of the Progress Schedule, the Schedule of Submittals, and the Schedule of Values are set forth in Paragraphs 2.03. 2.04, and 2.05.

F. Owner-delegated Designs: Submittals pursuant to Owner-delegated designs are governed by the provisions of Paragraph 7.19.

7.17 *Contractor's General Warranty and Guarantee*

A. Contractor warrants and guarantees to Owner that all Work will be in accordance with the Contract Documents and will not be defective. Engineer is entitled to rely on Contractor's warranty and guarantee.

B. Owner's rights under this warranty and guarantee are in addition to, and are not limited by, Owner's rights under the correction period provisions of Paragraph 15.08. The time in which Owner may enforce its warranty and guarantee rights under this Paragraph 7.17 is limited only by applicable Laws and Regulations restricting actions to enforce such rights; provided, however, that after the end of the correction period under Paragraph 15.08:

1. Owner shall give Contractor written notice of any defective Work within 60 days of the discovery that such Work is defective; and

2. Such notice will be deemed the start of an event giving rise to a Claim under Paragraph 12.01.B, such that any related Claim must be brought within 30 days of the notice.

C. Contractor's warranty and guarantee hereunder excludes defects or damage caused by:

1. abuse, or improper modification, maintenance, or operation, by persons other than Contractor, Subcontractors, Suppliers, or any other individual or entity for whom Contractor is responsible; or

2. normal wear and tear under normal usage.

D. Contractor's obligation to perform and complete the Work in accordance with the Contract Documents is absolute. None of the following will constitute an acceptance of Work that is not in accordance with the Contract Documents, a release of Contractor's obligation to perform the Work in accordance with the Contract Documents, or a release of Owner's warranty and guarantee rights under this Paragraph 7.17:

1. Observations by Engineer;

2. Recommendation by Engineer or payment by Owner of any progress or final payment;

3. The issuance of a certificate of Substantial Completion by Engineer or any payment related thereto by Owner;

4. Use or occupancy of the Work or any part thereof by Owner;

5. Any review and approval of a Shop Drawing or Sample submittal;

6. The issuance of a notice of acceptability by Engineer;

Copyright© 2018 National Society of Professional Engineers, American Council of Engineering Companies, and American Society of Civil Engineers. All rights reserved.

7. The end of the correction period established in Paragraph 15.08;

8. Any inspection, test, or approval by others; or

9. Any correction of defective Work by Owner.

E. If the Contract requires the Contractor to accept the assignment of a contract entered into by Owner, then the specific warranties, guarantees, and correction obligations contained in the assigned contract will govern with respect to Contractor's performance obligations to Owner for the Work described in the assigned contract.

F. Contractor warrants that materials incorporated into the Work comply with BABAA requirements and all applicable federal procurement regulations.

7.18 *Indemnification*

A. To the fullest extent permitted by Laws and Regulations, and in addition to any other obligations of Contractor under the Contract or otherwise, Contractor shall indemnify and hold harmless Owner and Engineer, and the officers, directors, members, partners, employees, agents, consultants and subcontractors of each and any of them, from losses, damages, costs, and judgments (including but not limited to all fees and charges of engineers, architects, attorneys, and other professionals, and all court or arbitration or other dispute resolution costs) arising from third-party claims or actions relating to or resulting from the performance or furnishing of the Work, provided that any such claim, action, loss, cost, judgment or damage is attributable to bodily injury, sickness, disease, or death, or to damage to or destruction of tangible property (other than the Work itself), including the loss of use resulting therefrom, but only to the extent caused by any negligent act or omission of Contractor, any Subcontractor, any Supplier, or any individual or entity directly or indirectly employed by any of them to perform any of the Work, or anyone for whose acts any of them may be liable.

B. In any and all claims against Owner or Engineer, or any of their officers, directors, members, partners, employees, agents, consultants, or subcontractors, by any employee (or the survivor or personal representative of such employee) of Contractor, any Subcontractor, any Supplier, or any individual or entity directly or indirectly employed by any of them to perform any of the Work, or anyone for whose acts any of them may be liable, the indemnification obligation under Paragraph 7.18.A will not be limited in any way by any limitation on the amount or type of damages, compensation, or benefits payable by or for Contractor or any such Subcontractor, Supplier, or other individual or entity under workers' compensation acts, disability benefit acts, or other employee benefit acts.

7.19 *Delegation of Professional Design Services*

A. Owner may require Contractor to provide professional design services for a portion of the Work by express delegation in the Contract Documents. Such delegation will specify the performance and design criteria that such services must satisfy, and the Submittals that Contractor must furnish to Engineer with respect to the Owner-delegated design.

B. Contractor shall cause such Owner-delegated professional design services to be provided pursuant to the professional standard of care by a properly licensed design professional, whose signature and seal must appear on all drawings, calculations, specifications, certifications, and Submittals prepared by such design professional. Such design professional must issue all certifications of design required by Laws and Regulations.

Copyright© 2018 National Society of Professional Engineers, American Council of Engineering Companies, and American Society of Civil Engineers. All rights reserved.

C. If a Shop Drawing or other Submittal related to the Owner-delegated design is prepared by Contractor, a Subcontractor, or others for submittal to Engineer, then such Shop Drawing or other Submittal must bear the written approval of Contractor's design professional when submitted by Contractor to Engineer.

D. Owner and Engineer shall be entitled to rely upon the adequacy, accuracy, and completeness of the services, certifications, and approvals performed or provided by the design professionals retained or employed by Contractor under an Owner-delegated design, subject to the professional standard of care and the performance and design criteria stated in the Contract Documents.

E. Pursuant to this Paragraph 7.19, Engineer's review, approval, and other determinations regarding design drawings, calculations, specifications, certifications, and other Submittals furnished by Contractor pursuant to an Owner-delegated design will be only for the following limited purposes:

1. Checking for conformance with the requirements of this Paragraph 7.19;
2. Confirming that Contractor (through its design professionals) has used the performance and design criteria specified in the Contract Documents; and
3. Establishing that the design furnished by Contractor is consistent with the design concept expressed in the Contract Documents.

F. Contractor shall not be responsible for the adequacy of performance or design criteria specified by Owner or Engineer.

G. Contractor is not required to provide professional services in violation of applicable Laws and Regulations.

ARTICLE 8—OTHER WORK AT THE SITE

8.01 *Other Work*

A. In addition to and apart from the Work under the Contract Documents, the Owner may perform other work at or adjacent to the Site. Such other work may be performed by Owner's employees, or through contracts between the Owner and third parties. Owner may also arrange to have third-party utility owners perform work on their utilities and facilities at or adjacent to the Site.

B. If Owner performs other work at or adjacent to the Site with Owner's employees, or through contracts for such other work, then Owner shall give Contractor written notice thereof prior to starting any such other work. If Owner has advance information regarding the start of any third-party utility work that Owner has arranged to take place at or adjacent to the Site, Owner shall provide such information to Contractor.

C. Contractor shall afford proper and safe access to the Site to each contractor that performs such other work, each utility owner performing other work, and Owner, if Owner is performing other work with Owner's employees, and provide a reasonable opportunity for the introduction and storage of materials and equipment and the execution of such other work.

D. Contractor shall do all cutting, fitting, and patching of the Work that may be required to properly connect or otherwise make its several parts come together and properly integrate

Copyright© 2018 National Society of Professional Engineers, American Council of Engineering Companies, and American Society of Civil Engineers. All rights reserved.

with such other work. Contractor shall not endanger any work of others by cutting, excavating, or otherwise altering such work; provided, however, that Contractor may cut or alter others' work with the written consent of Engineer and the others whose work will be affected.

E. If the proper execution or results of any part of Contractor's Work depends upon work performed by others, Contractor shall inspect such other work and promptly report to Engineer in writing any delays, defects, or deficiencies in such other work that render it unavailable or unsuitable for the proper execution and results of Contractor's Work. Contractor's failure to so report will constitute an acceptance of such other work as fit and proper for integration with Contractor's Work except for latent defects and deficiencies in such other work.

F. The provisions of this article are not applicable to work that is performed by third-party utilities or other third-party entities without a contract with Owner, or that is performed without having been arranged by Owner. If such work occurs, then any related delay, disruption, or interference incurred by Contractor is governed by the provisions of Paragraph 4.05.C.3.

8.02 *Coordination*

A. If Owner intends to contract with others for the performance of other work at or adjacent to the Site, to perform other work at or adjacent to the Site with Owner's employees, or to arrange to have utility owners perform work at or adjacent to the Site, the following will be ~~set forth in the Supplementary Conditions or~~ provided to Contractor prior to the start of any such other work:

1. The identity of the individual or entity that will have authority and responsibility for coordination of the activities among the various contractors;

2. An itemization of the specific matters to be covered by such authority and responsibility; and

3. The extent of such authority and responsibilities.

B. ~~Unless otherwise provided in the Supplementary Conditions,~~ Owner shall have sole authority and responsibility for such coordination.

8.03 *Legal Relationships*

A. If, in the course of performing other work for Owner at or adjacent to the Site, the Owner's employees, any other contractor working for Owner, or any utility owner that Owner has arranged to perform work, causes damage to the Work or to the property of Contractor or its Subcontractors, or delays, disrupts, interferes with, or increases the scope or cost of the performance of the Work, through actions or inaction, then Contractor shall be entitled to an equitable adjustment in the Contract Price or the Contract Times. Contractor must submit any Change Proposal seeking an equitable adjustment in the Contract Price or the Contract Times under this paragraph within 30 days of the damaging, delaying, disrupting, or interfering event. The entitlement to, and extent of, any such equitable adjustment will take into account information (if any) regarding such other work that was provided to Contractor in the Contract Documents prior to the submittal of the Bid or the final negotiation of the terms of the Contract, and any remedies available to Contractor under Laws or Regulations concerning utility action or inaction. When applicable, any such equitable adjustment in Contract Price

Copyright© 2018 National Society of Professional Engineers, American Council of Engineering Companies, and American Society of Civil Engineers. All rights reserved.

will be conditioned on Contractor assigning to Owner all Contractor's rights against such other contractor or utility owner with respect to the damage, delay, disruption, or interference that is the subject of the adjustment. Contractor's entitlement to an adjustment of the Contract Times or Contract Price is subject to the provisions of Paragraphs 4.05.D and 4.05.E.

B. Contractor shall take reasonable and customary measures to avoid damaging, delaying, disrupting, or interfering with the work of Owner, any other contractor, or any utility owner performing other work at or adjacent to the Site.

1. If Contractor fails to take such measures and as a result damages, delays, disrupts, or interferes with the work of any such other contractor or utility owner, then Owner may impose a set-off against payments due Contractor, and assign to such other contractor or utility owner the Owner's contractual rights against Contractor with respect to the breach of the obligations set forth in this Paragraph 8.03.B.

2. When Owner is performing other work at or adjacent to the Site with Owner's employees, Contractor shall be liable to Owner for damage to such other work, and for the reasonable direct delay, disruption, and interference costs incurred by Owner as a result of Contractor's failure to take reasonable and customary measures with respect to Owner's other work. In response to such damage, delay, disruption, or interference, Owner may impose a set-off against payments due Contractor.

C. If Contractor damages, delays, disrupts, or interferes with the work of any other contractor, or any utility owner performing other work at or adjacent to the Site, through Contractor's failure to take reasonable and customary measures to avoid such impacts, or if any claim arising out of Contractor's actions, inactions, or negligence in performance of the Work at or adjacent to the Site is made by any such other contractor or utility owner against Contractor, Owner, or Engineer, then Contractor shall (1) promptly attempt to settle the claim as to all parties through negotiations with such other contractor or utility owner, or otherwise resolve the claim by arbitration or other dispute resolution proceeding or at law, and (2) indemnify and hold harmless Owner and Engineer, and the officers, directors, members, partners, employees, agents, consultants and subcontractors of each and any of them from and against any such claims, and against all costs, losses, and damages (including but not limited to all fees and charges of engineers, architects, attorneys, and other professionals and all court or arbitration or other dispute resolution costs) arising out of or relating to such damage, delay, disruption, or interference.

ARTICLE 9—OWNER'S RESPONSIBILITIES

9.01 *Communications to Contractor*

A. Except as otherwise provided in these General Conditions, Owner shall issue all communications to Contractor through Engineer.

9.02 *Replacement of Engineer*

A. Owner may at its discretion appoint an engineer to replace Engineer, provided Contractor makes no reasonable objection to the replacement engineer. The replacement engineer's status under the Contract Documents will be that of the former Engineer.

9.03 *Furnish Data*

A. Owner shall promptly furnish the data required of Owner under the Contract Documents.

Copyright© 2018 National Society of Professional Engineers, American Council of Engineering Companies, and American Society of Civil Engineers. All rights reserved.

9.04 *Pay When Due*

A. Owner shall make payments to Contractor when they are due as provided in the Agreement.

9.05 *Lands and Easements; Reports, Tests, and Drawings*

A. Owner's duties with respect to providing lands and easements are set forth in Paragraph 5.01.

B. Owner's duties with respect to providing engineering surveys to establish reference points are set forth in Paragraph 4.03.

C. Article 5 refers to Owner's identifying and making available to Contractor copies of reports of explorations and tests of conditions at the Site, and drawings of physical conditions relating to existing surface or subsurface structures at the Site.

9.06 *Insurance*

A. Owner's responsibilities, if any, with respect to purchasing and maintaining liability and property insurance are set forth in Article 6.

9.07 *Change Orders*

A. Owner's responsibilities with respect to Change Orders are set forth in Article 11.

9.08 *Inspections, Tests, and Approvals*

A. Owner's responsibility with respect to certain inspections, tests, and approvals is set forth in Paragraph 14.02.B.

9.09 *Limitations on Owner's Responsibilities*

A. The Owner shall not supervise, direct, or have control or authority over, nor be responsible for, Contractor's means, methods, techniques, sequences, or procedures of construction, or the safety precautions and programs incident thereto, or for any failure of Contractor to comply with Laws and Regulations applicable to the performance of the Work. Owner will not be responsible for Contractor's failure to perform the Work in accordance with the Contract Documents.

9.10 *Undisclosed Hazardous Environmental Condition*

A. Owner's responsibility in respect to an undisclosed Hazardous Environmental Condition is set forth in Paragraph 5.06.

9.11 *Evidence of Financial Arrangements*

A. Upon request of Contractor, Owner shall furnish Contractor reasonable evidence that financial arrangements have been made to satisfy Owner's obligations under the Contract (including obligations under proposed changes in the Work).

9.12 *Safety Programs*

A. While at the Site, Owner's employees and representatives shall comply with the specific applicable requirements of Contractor's safety programs of which Owner has been informed.

B. Owner shall furnish copies of any applicable Owner safety programs to Contractor.

Copyright© 2018 National Society of Professional Engineers, American Council of Engineering Companies, and American Society of Civil Engineers. All rights reserved.

ARTICLE 10—ENGINEER'S STATUS DURING CONSTRUCTION

10.01 *Owner's Representative*

A. Engineer will be Owner's representative during the construction period. The duties and responsibilities and the limitations of authority of Engineer as Owner's representative during construction are set forth in the Contract.

10.02 *Visits to Site*

A. Engineer will make visits to the Site at intervals appropriate to the various stages of construction as Engineer deems necessary in order to observe, as an experienced and qualified design professional, the progress that has been made and the quality of the various aspects of Contractor's executed Work. Based on information obtained during such visits and observations, Engineer, for the benefit of Owner, will determine, in general, if the Work is proceeding in accordance with the Contract Documents. Engineer will not be required to make exhaustive or continuous inspections on the Site to check the quality or quantity of the Work. Engineer's efforts will be directed toward providing for Owner a greater degree of confidence that the completed Work will conform generally to the Contract Documents. On the basis of such visits and observations, Engineer will keep Owner informed of the progress of the Work and will endeavor to guard Owner against defective Work.

B. Engineer's visits and observations are subject to all the limitations on Engineer's authority and responsibility set forth in Paragraph 10.07. Particularly, but without limitation, during or as a result of Engineer's visits or observations of Contractor's Work, Engineer will not supervise, direct, control, or have authority over or be responsible for Contractor's means, methods, techniques, sequences, or procedures of construction, or the safety precautions and programs incident thereto, or for any failure of Contractor to comply with Laws and Regulations applicable to the performance of the Work.

C. Authorized representatives of the Illinois Environmental Protection Agency may visit the Project site to monitor compliance with SRF program requirements.

10.03 *Resident Project Representative*

A. If Owner and Engineer have agreed that Engineer will furnish a Resident Project Representative to represent Engineer at the Site and assist Engineer in observing the progress and quality of the Work, then the authority and responsibilities of any such Resident Project Representative will be as provided ~~in the Supplementary Conditions~~, and limitations on the responsibilities thereof will be as provided ~~in the Supplementary Conditions and~~ in Paragraph 10.07.

B. If Owner designates an individual or entity who is not Engineer's consultant, agent, or employee to represent Owner at the Site, then the responsibilities and authority of such individual or entity will be as provided ~~in the Supplementary Conditions~~

C. The Resident Project Representative (RPR) will be Engineer's representative at the Site. RPR's dealings in matters pertaining to the Work in general will be with Engineer and Contractor. RPR's dealings with Subcontractors will only be through or with the full knowledge or approval of Contractor. The RPR will:

1. *Conferences and Meetings:* Attend meetings with Contractor, such as preconstruction conferences, progress meetings, job conferences, and other Project-related meetings

Copyright© 2018 National Society of Professional Engineers, American Council of Engineering Companies, and American Society of Civil Engineers. All rights reserved.

(but not including Contractor's safety meetings), and as appropriate prepare and circulate copies of minutes thereof.

2. *Safety Compliance*: Comply with Site safety programs, as they apply to RPR, and if required to do so by such safety programs, receive safety training specifically related to RPR's own personal safety while at the Site.

3. *Liaison*

   a. Serve as Engineer's liaison with Contractor. Working principally through Contractor's authorized representative or designee, assist in providing information regarding the provisions and intent of the Contract Documents.

   b. Assist Engineer in serving as Owner's liaison with Contractor when Contractor's operations affect Owner's on-Site operations.

   c. Assist in obtaining from Owner additional details or information, when required for Contractor's proper execution of the Work.

4. *Review of Work; Defective Work*

   a. Conduct on-Site observations of the Work to assist Engineer in determining, to the extent set forth in Paragraph 10.02, if the Work is in general proceeding in accordance with the Contract Documents.

   b. Observe whether any Work in place appears to be defective.

   c. Observe whether any Work in place should be uncovered for observation, or requires special testing, inspection or approval.

5. *Inspections and Tests*

   a. Observe Contractor-arranged inspections required by Laws and Regulations, including but not limited to those performed by public or other agencies having jurisdiction over the Work.

   b. Accompany visiting inspectors representing public or other agencies having jurisdiction over the Work.

6. *Payment Requests:* Review Applications for Payment with Contractor.

7. *Completion*

   a. Participate in Engineer's visits regarding Substantial Completion.

   b. Assist in the preparation of a punch list of items to be completed or corrected.

   c. Participate in Engineer's visit to the Site in the company of Owner and Contractor regarding completion of the Work, and prepare a final punch list of items to be completed or corrected by Contractor.

   d. Observe whether items on the final punch list have been completed or corrected.

D. *The RPR will not:*

1. Authorize any deviation from the Contract Documents or substitution of materials or equipment (including "or-equal" items).

2. Exceed limitations of Engineer's authority as set forth in the Contract Documents.

Copyright© 2018 National Society of Professional Engineers, American Council of Engineering Companies, and American Society of Civil Engineers. All rights reserved.

3. Undertake any of the responsibilities of Contractor, Subcontractors, or Suppliers.

4. Advise on, issue directions relative to, or assume control over any aspect of the means, methods, techniques, sequences or procedures of construction.

5 Advise on, issue directions regarding, or assume control over security or safety practices, precautions, and programs in connection with the activities or operations of Owner or Contractor.

6. Participate in specialized field or laboratory tests or inspections conducted off-site by others except as specifically authorized by Engineer.

7. Authorize Owner to occupy the Project in whole or in part.

10.04 *Engineer's Authority*

A. Engineer has the authority to reject Work in accordance with Article 14.

B. Engineer's authority as to Submittals is set forth in Paragraph 7.16.

C. Engineer's authority as to design drawings, calculations, specifications, certifications and other Submittals from Contractor in response to Owner's delegation (if any) to Contractor of professional design services, is set forth in Paragraph 7.19.

D. Engineer's authority as to changes in the Work is set forth in Article 11.

E. Engineer's authority as to Applications for Payment is set forth in Article 15.

10.05 *Determinations for Unit Price Work*

A. Engineer will determine the actual quantities and classifications of Unit Price Work performed by Contractor as set forth in Paragraph 13.03.

10.06 *Decisions on Requirements of Contract Documents and Acceptability of Work*

A. Engineer will render decisions regarding the requirements of the Contract Documents, and judge the acceptability of the Work, pursuant to the specific procedures set forth herein for initial interpretations, Change Proposals, and acceptance of the Work. In rendering such decisions and judgments, Engineer will not show partiality to Owner or Contractor, and will not be liable to Owner, Contractor, or others in connection with any proceedings, interpretations, decisions, or judgments conducted or rendered in good faith.

10.07 *Limitations on Engineer's Authority and Responsibilities*

A. Neither Engineer's authority or responsibility under this Article 10 or under any other provision of the Contract, nor any decision made by Engineer in good faith either to exercise or not exercise such authority or responsibility or the undertaking, exercise, or performance of any authority or responsibility by Engineer, will create, impose, or give rise to any duty in contract, tort, or otherwise owed by Engineer to Contractor, any Subcontractor, any Supplier, any other individual or entity, or to any surety for or employee or agent of any of them.

B. Engineer will not supervise, direct, control, or have authority over or be responsible for Contractor's means, methods, techniques, sequences, or procedures of construction, or the safety precautions and programs incident thereto, or for any failure of Contractor to comply with Laws and Regulations applicable to the performance of the Work. Engineer will not be responsible for Contractor's failure to perform the Work in accordance with the Contract Documents.

Copyright© 2018 National Society of Professional Engineers, American Council of Engineering Companies, and American Society of Civil Engineers. All rights reserved.

C. Engineer will not be responsible for the acts or omissions of Contractor or of any Subcontractor, any Supplier, or of any other individual or entity performing any of the Work.

D. Engineer's review of the final Application for Payment and accompanying documentation, and all maintenance and operating instructions, schedules, guarantees, bonds, certificates of inspection, tests and approvals, and other documentation required to be delivered by Contractor under Paragraph 15.06.A, will only be to determine generally that their content complies with the requirements of, and in the case of certificates of inspections, tests, and approvals, that the results certified indicate compliance with the Contract Documents.

E. The limitations upon authority and responsibility set forth in this Paragraph 10.07 also apply to the Resident Project Representative, if any.

10.08 *Compliance with Safety Program*

A. While at the Site, Engineer's employees and representatives will comply with the specific applicable requirements of Owner's and Contractor's safety programs of which Engineer has been informed.

ARTICLE 11—CHANGES TO THE CONTRACT

11.01 *Amending and Supplementing the Contract*

A. The Contract may be amended or supplemented by a Change Order, a Work Change Directive, or a Field Order.

B. If an amendment or supplement to the Contract includes a change in the Contract Price or the Contract Times, such amendment or supplement must be set forth in a Change Order.

C. All changes to the Contract that involve (1) the performance or acceptability of the Work, (2) the design (as set forth in the Drawings, Specifications, or otherwise), or (3) other engineering or technical matters, must be supported by Engineer's recommendation. Owner and Contractor may amend other terms and conditions of the Contract without the recommendation of the Engineer.

D. Certain Change Orders may require prior approval by IEPA if they involve significant scope, cost, or funding modifications affecting SRF financing.

11.02 *Change Orders*

A. Owner and Contractor shall execute appropriate Change Orders covering:

1. Changes in Contract Price or Contract Times which are agreed to by the parties, including any undisputed sum or amount of time for Work actually performed in accordance with a Work Change Directive;

2. Changes in Contract Price resulting from an Owner set-off, unless Contractor has duly contested such set-off;

3. Changes in the Work which are: (a) ordered by Owner pursuant to Paragraph 11.05, (b) required because of Owner's acceptance of defective Work under Paragraph 14.04 or Owner's correction of defective Work under Paragraph 14.07, or (c) agreed to by the parties, subject to the need for Engineer's recommendation if the change in the Work involves the design (as set forth in the Drawings, Specifications, or otherwise) or other engineering or technical matters; and

Copyright© 2018 National Society of Professional Engineers, American Council of Engineering Companies, and American Society of Civil Engineers. All rights reserved.

4. Changes that embody the substance of any final and binding results under: Paragraph 11.03.B, resolving the impact of a Work Change Directive; Paragraph 11.09, concerning Change Proposals; Article 12, Claims; Paragraph 13.02.D, final adjustments resulting from allowances; Paragraph 13.03.D, final adjustments relating to determination of quantities for Unit Price Work; and similar provisions.

B. If Owner or Contractor refuses to execute a Change Order that is required to be executed under the terms of Paragraph 11.02.A, it will be deemed to be of full force and effect, as if fully executed.

11.03 *Work Change Directives*

A.

1. A Work Change Directive will not change the Contract Price or the Contract Times but is evidence that the parties expect that the modification ordered or documented by a Work Change Directive will be incorporated in a subsequently issued Change Order, following negotiations by the parties as to the Work Change Directive's effect, if any, on the Contract Price and Contract Times; or, if negotiations are unsuccessful, by a determination under the terms of the Contract Documents governing adjustments, expressly including Paragraph 11.07 regarding change of Contract Price.

B. If Owner has issued a Work Change Directive and:

1. Contractor believes that an adjustment in Contract Times or Contract Price is necessary, then Contractor shall submit any Change Proposal seeking such an adjustment no later than 30 days after the completion of the Work set out in the Work Change Directive.

2. Owner believes that an adjustment in Contract Times or Contract Price is necessary, then Owner shall submit any Claim seeking such an adjustment no later than 60 days after issuance of the Work Change Directive.

11.04 *Field Orders*

A. Engineer may authorize minor changes in the Work if the changes do not involve an adjustment in the Contract Price or the Contract Times and are compatible with the design concept of the completed Project as a functioning whole as indicated by the Contract Documents. Such changes will be accomplished by a Field Order and will be binding on Owner and also on Contractor, which shall perform the Work involved promptly.

B. If Contractor believes that a Field Order justifies an adjustment in the Contract Price or Contract Times, then before proceeding with the Work at issue, Contractor shall submit a Change Proposal as provided herein.

11.05 *Owner-Authorized Changes in the Work*

A. Without invalidating the Contract and without notice to any surety, Owner may, at any time or from time to time, order additions, deletions, or revisions in the Work. Changes involving the design (as set forth in the Drawings, Specifications, or otherwise) or other engineering or technical matters will be supported by Engineer's recommendation.

B. Such changes in the Work may be accomplished by a Change Order, if Owner and Contractor have agreed as to the effect, if any, of the changes on Contract Times or Contract Price; or by a Work Change Directive. Upon receipt of any such document, Contractor shall promptly proceed with the Work involved; or, in the case of a deletion in the Work, promptly cease

Copyright© 2018 National Society of Professional Engineers, American Council of Engineering Companies, and American Society of Civil Engineers. All rights reserved.

construction activities with respect to such deleted Work. Added or revised Work must be performed under the applicable conditions of the Contract Documents.

C. Nothing in this Paragraph 11.05 obligates Contractor to undertake work that Contractor reasonably concludes cannot be performed in a manner consistent with Contractor's safety obligations under the Contract Documents or Laws and Regulations.

11.06 *Unauthorized Changes in the Work*

A. Contractor shall not be entitled to an increase in the Contract Price or an extension of the Contract Times with respect to any work performed that is not required by the Contract Documents, as amended, modified, or supplemented, except in the case of an emergency as provided in Paragraph 7.15 or in the case of uncovering Work as provided in Paragraph 14.05.C.2.

11.07 *Change of Contract Price*

A. The Contract Price may only be changed by a Change Order. Any Change Proposal for an adjustment in the Contract Price must comply with the provisions of Paragraph 11.09. Any Claim for an adjustment of Contract Price must comply with the provisions of Article 12.

B. An adjustment in the Contract Price will be determined as follows:

1. Where the Work involved is covered by unit prices contained in the Contract Documents, then by application of such unit prices to the quantities of the items involved (subject to the provisions of Paragraph 13.03);

2. Where the Work involved is not covered by unit prices contained in the Contract Documents, then by a mutually agreed lump sum (which may include an allowance for overhead and profit not necessarily in accordance with Paragraph 11.07.C.2); or

3. Where the Work involved is not covered by unit prices contained in the Contract Documents and the parties do not reach mutual agreement to a lump sum, then on the basis of the Cost of the Work (determined as provided in Paragraph 13.01) plus a Contractor's fee for overhead and profit (determined as provided in Paragraph 11.07.C).

C. *Contractor's Fee*: When applicable, the Contractor's fee for overhead and profit will be determined as follows:

1. A mutually acceptable fixed fee; or

2. If a fixed fee is not agreed upon, then a fee based on the following percentages of the various portions of the Cost of the Work:

a. For costs incurred under Paragraphs 13.01.B.1 and 13.01.B.2, the Contractor's fee will be 15 percent;

b. For costs incurred under Paragraph 13.01.B.3, the Contractor's fee will be 5 percent;

c. Where one or more tiers of subcontracts are on the basis of Cost of the Work plus a fee and no fixed fee is agreed upon, the intent of Paragraphs 11.07.C.2.a and 11.07.C.2.b is that the Contractor's fee will be based on: (1) a fee of 15 percent of the costs incurred under Paragraphs 13.01.B.1 and 13.01.B.2 by the Subcontractor that actually performs the Work, at whatever tier, and (2) with respect to Contractor itself and to any Subcontractors of a tier higher than that of the Subcontractor that actually performs the Work, a fee of 5 percent of the amount (fee plus underlying costs

Copyright© 2018 National Society of Professional Engineers, American Council of Engineering Companies, and American Society of Civil Engineers. All rights reserved.

incurred) attributable to the next lower tier Subcontractor; provided, however, that for any such subcontracted Work the maximum total fee to be paid by Owner will be no greater than 27 percent of the costs incurred by the Subcontractor that actually performs the Work;

d. No fee will be payable on the basis of costs itemized under Paragraphs 13.01.B.4, 13.01.B.5, and 13.01.C;

e. The amount of credit to be allowed by Contractor to Owner for any change which results in a net decrease in Cost of the Work will be the amount of the actual net decrease in Cost of the Work and a deduction of an additional amount equal to 5 percent of such actual net decrease in Cost of the Work; and

f. When both additions and credits are involved in any one change or Change Proposal, the adjustment in Contractor's fee will be computed by determining the sum of the costs in each of the cost categories in Paragraph 13.01.B (specifically, payroll costs, Paragraph 13.01.B.1; incorporated materials and equipment costs, Paragraph 13.01.B.2; Subcontract costs, Paragraph 13.01.B.3; special consultants costs, Paragraph 13.01.B.4; and other costs, Paragraph 13.01.B.5) and applying to each such cost category sum the appropriate fee from Paragraphs 11.07.C.2.a through 11.07.C.2.e, inclusive.

11.08 *Change of Contract Times*

A. The Contract Times may only be changed by a Change Order. Any Change Proposal for an adjustment in the Contract Times must comply with the provisions of Paragraph 11.09. Any Claim for an adjustment in the Contract Times must comply with the provisions of Article 12.

B. Delay, disruption, and interference in the Work, and any related changes in Contract Times, are addressed in and governed by Paragraph 4.05.

C. The Contractor shall be responsible for the cost of any additional expenses occurred by the Owner as a result of the time extension, including but not limited to Engineering Services, Resident Project Representative, Owner's Representative, Legal, Administrative, any other costs incurred, etc.

11.09 *Change Proposals*

A. *Purpose and Content*: Contractor shall submit a Change Proposal to Engineer to request an adjustment in the Contract Times or Contract Price; contest an initial decision by Engineer concerning the requirements of the Contract Documents or relating to the acceptability of the Work under the Contract Documents; challenge a set-off against payment due; or seek other relief under the Contract. The Change Proposal will specify any proposed change in Contract Times or Contract Price, or other proposed relief, and explain the reason for the proposed change, with citations to any governing or applicable provisions of the Contract Documents. Each Change Proposal will address only one issue, or a set of closely related issues.

B. *Change Proposal Procedures*

1. *Submittal*: Contractor shall submit each Change Proposal to Engineer within 30 days after the start of the event giving rise thereto, or after such initial decision.

Copyright© 2018 National Society of Professional Engineers, American Council of Engineering Companies, and American Society of Civil Engineers. All rights reserved.

2. *Supporting Data*: The Contractor shall submit supporting data, including the proposed change in Contract Price or Contract Time (if any), to the Engineer and Owner within 15 days after the submittal of the Change Proposal.

   a. Change Proposals based on or related to delay, interruption, or interference must comply with the provisions of Paragraphs 4.05.D and 4.05.E.

   b. Change proposals related to a change of Contract Price must include full and detailed accounts of materials incorporated into the Work and labor and equipment used for the subject Work.

   The supporting data must be accompanied by a written statement that the supporting data are accurate and complete, and that any requested time or price adjustment is the entire adjustment to which Contractor believes it is entitled as a result of said event.

3. *Engineer's Initial Review*: Engineer will advise Owner regarding the Change Proposal, and consider any comments or response from Owner regarding the Change Proposal. If in its discretion Engineer concludes that additional supporting data is needed before conducting a full review and making a decision regarding the Change Proposal, then Engineer may request that Contractor submit such additional supporting data by a date specified by Engineer, prior to Engineer beginning its full review of the Change Proposal.

4. *Engineer's Full Review and Action on the Change Proposal*: Upon receipt of Contractor's supporting data (including any additional data requested by Engineer), Engineer will conduct a full review of each Change Proposal and, within 30 days after such receipt of the Contractor's supporting data, either approve the Change Proposal in whole, deny it in whole, or approve it in part and deny it in part. Such actions must be in writing, with a copy provided to Owner and Contractor. If Engineer does not take action on the Change Proposal within 30 days, then either Owner or Contractor may at any time thereafter submit a letter to the other party indicating that as a result of Engineer's inaction the Change Proposal is deemed denied, thereby commencing the time for appeal of the denial under Article 12.

5. *Binding Decision*: Engineer's decision is final and binding upon Owner and Contractor, unless Owner or Contractor appeals the decision by filing a Claim under Article 12.

C. *Resolution of Certain Change Proposals*: If the Change Proposal does not involve the design (as set forth in the Drawings, Specifications, or otherwise), the acceptability of the Work, or other engineering or technical matters, then Engineer will notify the parties in writing that the Engineer is unable to resolve the Change Proposal. For purposes of further resolution of such a Change Proposal, such notice will be deemed a denial, and Contractor may choose to seek resolution under the terms of Article 12.

D. *Post-Completion*: Contractor shall not submit any Change Proposals after Engineer issues a written recommendation of final payment pursuant to Paragraph 15.06.B.

11.10 *Notification to Surety*

A. If the provisions of any bond require notice to be given to a surety of any change affecting the general scope of the Work or the provisions of the Contract Documents (including, but not limited to, Contract Price or Contract Times), the giving of any such notice will be Contractor's responsibility. The amount of each applicable bond will be adjusted to reflect the effect of any such change.

Copyright© 2018 National Society of Professional Engineers, American Council of Engineering Companies, and American Society of Civil Engineers. All rights reserved.

ARTICLE 12—CLAIMS

12.01 *Claims*

A. *Claims Process*: The following disputes between Owner and Contractor are subject to the Claims process set forth in this article:

1. Appeals by Owner or Contractor of Engineer's decisions regarding Change Proposals;

2. Owner demands for adjustments in the Contract Price or Contract Times, or other relief under the Contract Documents;

3. Disputes that Engineer has been unable to address because they do not involve the design (as set forth in the Drawings, Specifications, or otherwise), the acceptability of the Work, or other engineering or technical matters; and

4. Subject to the waiver provisions of Paragraph 15.07, any dispute arising after Engineer has issued a written recommendation of final payment pursuant to Paragraph 15.06.B.

B. *Submittal of Claim*: The party submitting a Claim shall deliver it directly to the other party to the Contract promptly (but in no event later than 30 days) after the start of the event giving rise thereto; in the case of appeals regarding Change Proposals within 30 days of the decision under appeal. The party submitting the Claim shall also furnish a copy to the Engineer, for its information only. The responsibility to substantiate a Claim rests with the party making the Claim. In the case of a Claim by Contractor seeking an increase in the Contract Times or Contract Price, Contractor shall certify that the Claim is made in good faith, that the supporting data are accurate and complete, and that to the best of Contractor's knowledge and belief the amount of time or money requested accurately reflects the full amount to which Contractor is entitled.

C. *Review and Resolution*: The party receiving a Claim shall review it thoroughly, giving full consideration to its merits. The two parties shall seek to resolve the Claim through the exchange of information and direct negotiations. The parties may extend the time for resolving the Claim by mutual agreement. All actions taken on a Claim will be stated in writing and submitted to the other party, with a copy to Engineer.

D. *Mediation*

1. At any time after initiation of a Claim, Owner and Contractor may mutually agree to mediation of the underlying dispute. The agreement to mediate will stay the Claim submittal and response process.

2. If Owner and Contractor agree to mediation, then after 60 days from such agreement, either Owner or Contractor may unilaterally terminate the mediation process, and the Claim submittal and decision process will resume as of the date of the termination. If the mediation proceeds but is unsuccessful in resolving the dispute, the Claim submittal and decision process will resume as of the date of the conclusion of the mediation, as determined by the mediator.

3. Owner and Contractor shall each pay one-half of the mediator's fees and costs.

E. *Partial Approval*: If the party receiving a Claim approves the Claim in part and denies it in part, such action will be final and binding unless within 30 days of such action the other party invokes the procedure set forth in Article 17 for final resolution of disputes.

Copyright© 2018 National Society of Professional Engineers, American Council of Engineering Companies, and American Society of Civil Engineers. All rights reserved.

F. *Denial of Claim*: If efforts to resolve a Claim are not successful, the party receiving the Claim may deny it by giving written notice of denial to the other party. If the receiving party does not take action on the Claim within 90 days, then either Owner or Contractor may at any time thereafter submit a letter to the other party indicating that as a result of the inaction, the Claim is deemed denied, thereby commencing the time for appeal of the denial. A denial of the Claim will be final and binding unless within 30 days of the denial the other party invokes the procedure set forth in Article 17 for the final resolution of disputes.

G. *Final and Binding Results*: If the parties reach a mutual agreement regarding a Claim, whether through approval of the Claim, direct negotiations, mediation, or otherwise; or if a Claim is approved in part and denied in part, or denied in full, and such actions become final and binding; then the results of the agreement or action on the Claim will be incorporated in a Change Order or other written document to the extent they affect the Contract, including the Work, the Contract Times, or the Contract Price.

H. Nothing in this Article shall limit the authority of IEPA to review Project records or enforce SRF program requirements associated with the Project.

ARTICLE 13—COST OF THE WORK; ALLOWANCES; UNIT PRICE WORK

13.01 *Cost of the Work*

A. *Purposes for Determination of Cost of the Work*: The term Cost of the Work means the sum of all costs necessary for the proper performance of the Work at issue, as further defined below. The provisions of this Paragraph 13.01 are used for two distinct purposes:

1. To determine Cost of the Work when Cost of the Work is a component of the Contract Price, under cost-plus-fee, time-and-materials, or other cost-based terms; or

2. When needed to determine the value of a Change Order, Change Proposal, Claim, set-off, or other adjustment in Contract Price. When the value of any such adjustment is determined on the basis of Cost of the Work, Contractor is entitled only to those additional or incremental costs required because of the change in the Work or because of the event giving rise to the adjustment.

B. *Costs Included*: Except as otherwise may be agreed to in writing by Owner, costs included in the Cost of the Work will be in amounts no higher than those commonly incurred in the locality of the Project, will not include any of the costs itemized in Paragraph 13.01.C, and will include only the following items:

1. Payroll costs for employees in the direct employ of Contractor in the performance of the Work under schedules of job classifications agreed upon by Owner and Contractor in advance of the subject Work. Such employees include, without limitation, superintendents, foremen, safety managers, safety representatives, and other personnel employed full time on the Work. Payroll costs for employees not employed full time on the Work will be apportioned on the basis of their time spent on the Work. Payroll costs include, but are not limited to, salaries and wages plus the cost of fringe benefits, which include social security contributions, unemployment, excise, and payroll taxes, workers' compensation, health and retirement benefits, sick leave, and vacation and holiday pay applicable thereto. The expenses of performing Work outside of regular working hours, on Saturday, Sunday, or legal holidays, will be included in the above to the extent authorized by Owner.

Copyright© 2018 National Society of Professional Engineers, American Council of Engineering Companies, and American Society of Civil Engineers. All rights reserved.

2. Cost of all materials and equipment furnished and incorporated in the Work, including costs of transportation and storage thereof, and Suppliers' field services required in connection therewith. All cash discounts accrue to Contractor unless Owner deposits funds with Contractor with which to make payments, in which case the cash discounts will accrue to Owner. All trade discounts, rebates, and refunds and returns from sale of surplus materials and equipment will accrue to Owner, and Contractor shall make provisions so that they may be obtained.

3. Payments made by Contractor to Subcontractors for Work performed by Subcontractors. If required by Owner, Contractor shall obtain competitive bids from subcontractors acceptable to Owner and Contractor and shall deliver such bids to Owner, which will then determine, with the advice of Engineer, which bids, if any, will be acceptable. If any subcontract provides that the Subcontractor is to be paid on the basis of Cost of the Work plus a fee, the Subcontractor's Cost of the Work and fee will be determined in the same manner as Contractor's Cost of the Work and fee as provided in this Paragraph 13.01.

4. Costs of special consultants (including but not limited to engineers, architects, testing laboratories, surveyors, attorneys, and accountants) employed or retained for services specifically related to the Work.

5. Other costs consisting of the following:

   a. The proportion of necessary transportation, travel, and subsistence expenses of Contractor's employees incurred in discharge of duties connected with the Work.

   b. Cost, including transportation and maintenance, of all materials, supplies, equipment, machinery, appliances, office, and temporary facilities at the Site, which are consumed in the performance of the Work, and cost, less market value, of such items used but not consumed which remain the property of Contractor.

      1) In establishing included costs for materials such as scaffolding, plating, or sheeting, consideration will be given to the actual or the estimated life of the material for use on other projects; or rental rates may be established on the basis of purchase or salvage value of such items, whichever is less. Contractor will not be eligible for compensation for such items in an amount that exceeds the purchase cost of such item.

   c. *Construction Equipment Rental*

      1) Rentals of all construction equipment and machinery, and the parts thereof, in accordance with rental agreements approved by Owner as to price (including any surcharge or special rates applicable to overtime use of the construction equipment or machinery), and the costs of transportation, loading, unloading, assembly, dismantling, and removal thereof. All such costs will be in accordance with the terms of said rental agreements. The rental of any such equipment, machinery, or parts must cease when the use thereof is no longer necessary for the Work.

      2) Costs for equipment and machinery owned by Contractor or a Contractor-related entity will be paid at a rate shown for such equipment in the equipment rental rate book specified~~ in the Supplementary Conditions~~. An hourly rate will be computed by dividing the monthly rates by 176. These computed rates will include all operating costs.

Copyright© 2018 National Society of Professional Engineers, American Council of Engineering Companies, and American Society of Civil Engineers. All rights reserved.

3) With respect to Work that is the result of a Change Order, Change Proposal, Claim, set-off, or other adjustment in Contract Price ("changed Work"), included costs will be based on the time the equipment or machinery is in use on the changed Work and the costs of transportation, loading, unloading, assembly, dismantling, and removal when directly attributable to the changed Work. The cost of any such equipment or machinery, or parts thereof, must cease to accrue when the use thereof is no longer necessary for the changed Work.

d. Sales, consumer, use, and other similar taxes related to the Work, and for which Contractor is liable, as imposed by Laws and Regulations.

e. Deposits lost for causes other than negligence of Contractor, any Subcontractor, or anyone directly or indirectly employed by any of them or for whose acts any of them may be liable, and royalty payments and fees for permits and licenses.

f. Losses and damages (and related expenses) caused by damage to the Work, not compensated by insurance or otherwise, sustained by Contractor in connection with the performance of the Work (except losses and damages within the deductible amounts of builder's risk or other property insurance established in accordance with Paragraph 6.04), provided such losses and damages have resulted from causes other than the negligence of Contractor, any Subcontractor, or anyone directly or indirectly employed by any of them or for whose acts any of them may be liable. Such losses include settlements made with the written consent and approval of Owner. No such losses, damages, and expenses will be included in the Cost of the Work for the purpose of determining Contractor's fee.

g. The cost of utilities, fuel, and sanitary facilities at the Site.

h. Minor expenses such as communication service at the Site, express and courier services, and similar petty cash items in connection with the Work.

i. The costs of premiums for all bonds and insurance that Contractor is required by the Contract Documents to purchase and maintain.

C. *Costs Excluded*: The term Cost of the Work does not include any of the following items:

1. Payroll costs and other compensation of Contractor's officers, executives, principals, general managers, engineers, architects, estimators, attorneys, auditors, accountants, purchasing and contracting agents, expediters, timekeepers, clerks, and other personnel employed by Contractor, whether at the Site or in Contractor's principal or branch office for general administration of the Work and not specifically included in the agreed upon schedule of job classifications referred to in Paragraph 13.01.B.1 or specifically covered by Paragraph 13.01.B.4. The payroll costs and other compensation excluded here are to be considered administrative costs covered by the Contractor's fee.

2. The cost of purchasing, renting, or furnishing small tools and hand tools.

3. Expenses of Contractor's principal and branch offices other than Contractor's office at the Site.

4. Any part of Contractor's capital expenses, including interest on Contractor's capital employed for the Work and charges against Contractor for delinquent payments.

Copyright© 2018 National Society of Professional Engineers, American Council of Engineering Companies, and American Society of Civil Engineers. All rights reserved.

5. Costs due to the negligence of Contractor, any Subcontractor, or anyone directly or indirectly employed by any of them or for whose acts any of them may be liable, including but not limited to, the correction of defective Work, disposal of materials or equipment wrongly supplied, and making good any damage to property.

6. Expenses incurred in preparing and advancing Claims.

7. Other overhead or general expense costs of any kind and the costs of any item not specifically and expressly included in Paragraph 13.01.B.

D. *Contractor's Fee*

1. When the Work as a whole is performed on the basis of cost-plus-a-fee, then:

a. Contractor's fee for the Work set forth in the Contract Documents as of the Effective Date of the Contract will be determined as set forth in the Agreement.

b. for any Work covered by a Change Order, Change Proposal, Claim, set-off, or other adjustment in Contract Price on the basis of Cost of the Work, Contractor's fee will be determined as follows:

1) When the fee for the Work as a whole is a percentage of the Cost of the Work, the fee will automatically adjust as the Cost of the Work changes.

2) When the fee for the Work as a whole is a fixed fee, the fee for any additions or deletions will be determined in accordance with Paragraph 11.07.C.2.

2. When the Work as a whole is performed on the basis of a stipulated sum, or any other basis other than cost-plus-a-fee, then Contractor's fee for any Work covered by a Change Order, Change Proposal, Claim, set-off, or other adjustment in Contract Price on the basis of Cost of the Work will be determined in accordance with Paragraph 11.07.C.2.

E. *Documentation and Audit*: Whenever the Cost of the Work for any purpose is to be determined pursuant to this Article 13, Contractor and pertinent Subcontractors will establish and maintain records of the costs in accordance with generally accepted accounting practices. Subject to prior written notice, Owner will be afforded reasonable access, during normal business hours, to all Contractor's accounts, records, books, correspondence, instructions, drawings, receipts, vouchers, memoranda, and similar data relating to the Cost of the Work and Contractor's fee. Contractor shall preserve all such documents for a period of three years after the final payment by Owner. Pertinent Subcontractors will afford such access to Owner, and preserve such documents, to the same extent required of Contractor.

13.02 *Allowances*

A. It is understood that Contractor has included in the Contract Price all allowances so named in the Contract Documents and shall cause the Work so covered to be performed for such sums and by such persons or entities as may be acceptable to Owner and Engineer.

B. *Cash Allowances*: Contractor agrees that:

1. the cash allowances include the cost to Contractor (less any applicable trade discounts) of materials and equipment required by the allowances to be delivered at the Site, and all applicable taxes; and

2. Contractor's costs for unloading and handling on the Site, labor, installation, overhead, profit, and other expenses contemplated for the cash allowances have been included in

Copyright© 2018 National Society of Professional Engineers, American Council of Engineering Companies, and American Society of Civil Engineers. All rights reserved.

the Contract Price and not in the allowances, and no demand for additional payment for any of the foregoing will be valid.

C. [Deleted] ~~*Owner's Contingency Allowance*: Contractor agrees that an Owner's contingency allowance, if any, is for the sole use of Owner to cover unanticipated costs.~~

D. Prior to final payment, an appropriate Change Order will be issued as recommended by Engineer to reflect actual amounts due Contractor for Work covered by allowances, and the Contract Price will be correspondingly adjusted.

13.03 *Unit Price Work*

A. Where the Contract Documents provide that all or part of the Work is to be Unit Price Work, initially the Contract Price will be deemed to include for all Unit Price Work an amount equal to the sum of the unit price for each separately identified item of Unit Price Work times the estimated quantity of each item as indicated in the Agreement.

B. The estimated quantities of items of Unit Price Work are not guaranteed and are solely for the purpose of comparison of Bids and determining an initial Contract Price. Payments to Contractor for Unit Price Work will be based on actual quantities.

C. Each unit price will be deemed to include an amount considered by Contractor to be adequate to cover Contractor's overhead and profit for each separately identified item.

D. Engineer will determine the actual quantities and classifications of Unit Price Work performed by Contractor. Engineer will review with Contractor the Engineer's preliminary determinations on such matters before rendering a written decision thereon (by recommendation of an Application for Payment or otherwise). Engineer's written decision thereon will be final and binding (except as modified by Engineer to reflect changed factual conditions or more accurate data) upon Owner and Contractor, and the final adjustment of Contract Price will be set forth in a Change Order, subject to the provisions of the following paragraph.

E. *Adjustments in Unit Price*

1. Contractor or Owner shall be entitled to an adjustment in the unit price with respect to an item of Unit Price Work if:

a. the extended price of a particular item of Unit Price Work amounts to 5 percent or more of the Contract Price (based on estimated quantities at the time of Contract formation) and the variation in the quantity of that particular item of Unit Price Work actually furnished or performed by Contractor differs by more than 25 percent from the quantity of such item indicated in the Agreement; and ~~the quantity of the item of Unit Price Work performed by Contractor differs materially and significantly from the estimated quantity of such item indicated in the Agreement; and~~

b. ~~Contractor's unit costs to perform the item of Unit Price Work have changed materially and significantly as a result of the quantity change.~~

2. If there is no corresponding adjustment with respect to any other item of Work; and~~The adjustment in unit price will account for and be coordinated with any related changes in quantities of other items of Work, and in Contractor's costs to perform such other Work, such that the resulting overall change in Contract Price is equitable to Owner and Contractor.~~

Copyright© 2018 National Society of Professional Engineers, American Council of Engineering Companies, and American Society of Civil Engineers. All rights reserved.

3. If Contractor believes that Contractor has incurred additional expense as a result thereof, Contractor may submit a Change Proposal, or if Owner believes that the quantity variation entities Owner to an adjustment in the unit price, Owner may make a Claim, seeking an adjustment in the Contract Price. ~~Adjusted unit prices will apply to all units of that item.~~

ARTICLE 14—TESTS AND INSPECTIONS; CORRECTION, REMOVAL, OR ACCEPTANCE OF DEFECTIVE WORK

14.01 *Access to Work*

A. Owner, Engineer, their consultants and other representatives and personnel of Owner, independent testing laboratories, and authorities having jurisdiction have access to the Site and the Work at reasonable times for their observation, inspection, and testing. Contractor shall provide them proper and safe conditions for such access and advise them of Contractor's safety procedures and programs so that they may comply with such procedures and programs as applicable.

14.02 *Tests, Inspections, and Approvals*

A. Contractor shall give Engineer timely notice of readiness of the Work (or specific parts thereof) for all required inspections and tests, and shall cooperate with inspection and testing personnel to facilitate required inspections and tests.

B. Owner shall retain and pay for the services of an independent inspector, testing laboratory, or other qualified individual or entity to perform all inspections and tests expressly required by the Contract Documents to be furnished and paid for by Owner, except that costs incurred in connection with tests or inspections of covered Work will be governed by the provisions of Paragraph 14.05.

C. If Laws or Regulations of any public body having jurisdiction require any Work (or part thereof) specifically to be inspected, tested, or approved by an employee or other representative of such public body, Contractor shall assume full responsibility for arranging and obtaining such inspections, tests, or approvals, pay all costs in connection therewith, and furnish Engineer the required certificates of inspection or approval.

D. Contractor shall be responsible for arranging, obtaining, and paying for all inspections and tests required:

1. by the Contract Documents, unless the Contract Documents expressly allocate responsibility for a specific inspection or test to Owner;

2. to attain Owner's and Engineer's acceptance of materials or equipment to be incorporated in the Work;

3. by manufacturers of equipment furnished under the Contract Documents;

4. for testing, adjusting, and balancing of mechanical, electrical, and other equipment to be incorporated into the Work; and

5. for acceptance of materials, mix designs, or equipment submitted for approval prior to Contractor's purchase thereof for incorporation in the Work.

Such inspections and tests will be performed by independent inspectors, testing laboratories, or other qualified individuals or entities acceptable to Owner and Engineer.

Copyright© 2018 National Society of Professional Engineers, American Council of Engineering Companies, and American Society of Civil Engineers. All rights reserved.

E. If the Contract Documents require the Work (or part thereof) to be approved by Owner, Engineer, or another designated individual or entity, then Contractor shall assume full responsibility for arranging and obtaining such approvals.

F. If any Work (or the work of others) that is to be inspected, tested, or approved is covered by Contractor without written concurrence of Engineer, Contractor shall, if requested by Engineer, uncover such Work for observation. Such uncovering will be at Contractor's expense unless Contractor had given Engineer timely notice of Contractor's intention to cover the same and Engineer had not acted with reasonable promptness in response to such notice.

14.03 *Defective Work*

A. *Contractor's Obligation*: It is Contractor's obligation to assure that the Work is not defective.

B. *Engineer's Authority*: Engineer has the authority to determine whether Work is defective, and to reject defective Work.

C. *Notice of Defects*: Prompt written notice of all defective Work of which Owner or Engineer has actual knowledge will be given to Contractor.

D. *Correction, or Removal and Replacement*: Promptly after receipt of written notice of defective Work, Contractor shall correct all such defective Work, whether or not fabricated, installed, or completed, or, if Engineer has rejected the defective Work, remove it from the Project and replace it with Work that is not defective.

E. *Preservation of Warranties*: When correcting defective Work, Contractor shall take no action that would void or otherwise impair Owner's special warranty and guarantee, if any, on said Work.

F. *Costs and Damages*: In addition to its correction, removal, and replacement obligations with respect to defective Work, Contractor shall pay all claims, costs, losses, and damages arising out of or relating to defective Work, including but not limited to the cost of the inspection, testing, correction, removal, replacement, or reconstruction of such defective Work, fines levied against Owner by governmental authorities because the Work is defective, and the costs of repair or replacement of work of others resulting from defective Work. Prior to final payment, if Owner and Contractor are unable to agree as to the measure of such claims, costs, losses, and damages resulting from defective Work, then Owner may impose a reasonable set-off against payments due under Article 15.

14.04 *Acceptance of Defective Work*

A. If, instead of requiring correction or removal and replacement of defective Work, Owner prefers to accept it, Owner may do so (subject, if such acceptance occurs prior to final payment, to Engineer's confirmation that such acceptance is in general accord with the design intent and applicable engineering principles, and will not endanger public safety). Contractor shall pay all claims, costs, losses, and damages attributable to Owner's evaluation of and determination to accept such defective Work (such costs to be approved by Engineer as to reasonableness), and for the diminished value of the Work to the extent not otherwise paid by Contractor. If any such acceptance occurs prior to final payment, the necessary revisions in the Contract Documents with respect to the Work will be incorporated in a Change Order. If the parties are unable to agree as to the decrease in the Contract Price, reflecting the diminished value of Work so accepted, then Owner may impose a reasonable set-off against

Copyright© 2018 National Society of Professional Engineers, American Council of Engineering Companies, and American Society of Civil Engineers. All rights reserved.

payments due under Article 15. If the acceptance of defective Work occurs after final payment, Contractor shall pay an appropriate amount to Owner.

14.05 *Uncovering Work*

A. Engineer has the authority to require additional inspection or testing of the Work, whether or not the Work is fabricated, installed, or completed.

B. If any Work is covered contrary to the written request of Engineer, then Contractor shall, if requested by Engineer, uncover such Work for Engineer's observation, and then replace the covering, all at Contractor's expense.

C. If Engineer considers it necessary or advisable that covered Work be observed by Engineer or inspected or tested by others, then Contractor, at Engineer's request, shall uncover, expose, or otherwise make available for observation, inspection, or testing as Engineer may require, that portion of the Work in question, and provide all necessary labor, material, and equipment.

1. If it is found that the uncovered Work is defective, Contractor shall be responsible for all claims, costs, losses, and damages arising out of or relating to such uncovering, exposure, observation, inspection, and testing, and of satisfactory replacement or reconstruction (including but not limited to all costs of repair or replacement of work of others); and pending Contractor's full discharge of this responsibility the Owner shall be entitled to impose a reasonable set-off against payments due under Article 15.

2. If the uncovered Work is not found to be defective, Contractor shall be allowed an increase in the Contract Price or an extension of the Contract Times, directly attributable to such uncovering, exposure, observation, inspection, testing, replacement, and reconstruction. If the parties are unable to agree as to the amount or extent thereof, then Contractor may submit a Change Proposal within 30 days of the determination that the Work is not defective.

14.06 *Owner May Stop the Work*

A. If the Work is defective, or Contractor fails to supply sufficient skilled workers or suitable materials or equipment, or fails to perform the Work in such a way that the completed Work will conform to the Contract Documents, then Owner may order Contractor to stop the Work, or any portion thereof, until the cause for such order has been eliminated; however, this right of Owner to stop the Work will not give rise to any duty on the part of Owner to exercise this right for the benefit of Contractor, any Subcontractor, any Supplier, any other individual or entity, or any surety for, or employee or agent of any of them.

14.07 Owner May Correct Defective Work

A. If Contractor fails within a reasonable time after written notice from Engineer to correct defective Work, or to remove and replace defective Work as required by Engineer, then Owner may, after 7 days' written notice to Contractor, correct or remedy any such deficiency.

B. In exercising the rights and remedies under this Paragraph 14.07, Owner shall proceed expeditiously. In connection with such corrective or remedial action, Owner may exclude Contractor from all or part of the Site, take possession of all or part of the Work and suspend Contractor's services related thereto, and incorporate in the Work all materials and equipment stored at the Site or for which Owner has paid Contractor but which are stored elsewhere. Contractor shall allow Owner, Owner's representatives, agents and employees,

Copyright© 2018 National Society of Professional Engineers, American Council of Engineering Companies, and American Society of Civil Engineers. All rights reserved.

Owner's other contractors, and Engineer and Engineer's consultants access to the Site to enable Owner to exercise the rights and remedies under this paragraph.

C. All claims, costs, losses, and damages incurred or sustained by Owner in exercising the rights and remedies under this Paragraph 14.07 will be charged against Contractor as set-offs against payments due under Article 15. Such claims, costs, losses and damages will include but not be limited to all costs of repair, or replacement of work of others destroyed or damaged by correction, removal, or replacement of Contractor's defective Work.

D. Contractor shall not be allowed an extension of the Contract Times because of any delay in the performance of the Work attributable to the exercise by Owner of Owner's rights and remedies under this Paragraph 14.07.

ARTICLE 15—PAYMENTS TO CONTRACTOR; SET-OFFS; COMPLETION; CORRECTION PERIOD

15.01 *Progress Payments*

A. *Basis for Progress Payments*: The Schedule of Values established as provided in Article 2 will serve as the basis for progress payments and will be incorporated into a form of Application for Payment acceptable to Engineer. Progress payments for Unit Price Work will be based on the number of units completed during the pay period, as determined under the provisions of Paragraph 13.03. Progress payments for cost-based Work will be based on Cost of the Work completed by Contractor during the pay period.

B. *Applications for Payments*

1. At least 20 days before the date established in the Agreement for each progress payment (but not more often than once a month), Contractor shall submit to Engineer for review an Application for Payment filled out and signed by Contractor covering the Work completed as of the date of the Application and accompanied by such supporting documentation as is required by the Contract Documents.

2. If payment is requested on the basis of materials and equipment not incorporated in the Work but delivered and suitably stored at the Site or at another location agreed to in writing, the Application for Payment must also be accompanied by: (a) a bill of sale, invoice, copies of subcontract or purchase order payments, or other documentation establishing full payment by Contractor for the materials and equipment; (b) at Owner's request, documentation warranting that Owner has received the materials and equipment free and clear of all Liens; and (c) evidence that the materials and equipment are covered by appropriate property insurance, a warehouse bond, or other arrangements to protect Owner's interest therein, all of which must be satisfactory to Owner.

3. Beginning with the second Application for Payment, each Application must include an affidavit of Contractor stating that all previous progress payments received by Contractor have been applied to discharge Contractor's legitimate obligations associated with prior Applications for Payment.

4. The amount of retainage with respect to progress payments will be as stipulated in the Agreement. **No payments will be made that would deplete the retainage, place in escrow any funds that are required for retainage or invest the retainage for the benefit of the Contractor**.

Copyright© 2018 National Society of Professional Engineers, American Council of Engineering Companies, and American Society of Civil Engineers. All rights reserved.

5. **The Application for Payment form to be used on this Project is EJCDC C-620. The Agency must approve all Applications for Payment before payment is made.**

6. **Submission of certified payroll documentation shall be a condition of payment when required under Davis-Bacon provisions.**

C. *Review of Applications*

1. Engineer will, within 10 days after receipt of each Application for Payment, including each resubmittal, either indicate in writing a recommendation of payment and present the Application to Owner, or return the Application to Contractor indicating in writing Engineer's reasons for refusing to recommend payment. In the latter case, Contractor may make the necessary corrections and resubmit the Application.

2. Engineer's recommendation of any payment requested in an Application for Payment will constitute a representation by Engineer to Owner, based on Engineer's observations of the executed Work as an experienced and qualified design professional, and on Engineer's review of the Application for Payment and the accompanying data and schedules, that to the best of Engineer's knowledge, information and belief:

   a. the Work has progressed to the point indicated;

   b. the quality of the Work is generally in accordance with the Contract Documents (subject to an evaluation of the Work as a functioning whole prior to or upon Substantial Completion, the results of any subsequent tests called for in the Contract Documents, a final determination of quantities and classifications for Unit Price Work under Paragraph 13.03, and any other qualifications stated in the recommendation); and

   c. the conditions precedent to Contractor's being entitled to such payment appear to have been fulfilled in so far as it is Engineer's responsibility to observe the Work.

3. By recommending any such payment Engineer will not thereby be deemed to have represented that:

   a. inspections made to check the quality or the quantity of the Work as it has been performed have been exhaustive, extended to every aspect of the Work in progress, or involved detailed inspections of the Work beyond the responsibilities specifically assigned to Engineer in the Contract; or

   b. there may not be other matters or issues between the parties that might entitle Contractor to be paid additionally by Owner or entitle Owner to withhold payment to Contractor.

4. Neither Engineer's review of Contractor's Work for the purposes of recommending payments nor Engineer's recommendation of any payment, including final payment, will impose responsibility on Engineer:

   a. to supervise, direct, or control the Work;

   b. for the means, methods, techniques, sequences, or procedures of construction, or the safety precautions and programs incident thereto;

   c. for Contractor's failure to comply with Laws and Regulations applicable to Contractor's performance of the Work;

Copyright© 2018 National Society of Professional Engineers, American Council of Engineering Companies, and American Society of Civil Engineers. All rights reserved.

d. to make any examination to ascertain how or for what purposes Contractor has used the money paid by Owner; or

e. to determine that title to any of the Work, materials, or equipment has passed to Owner free and clear of any Liens.

5. Engineer may refuse to recommend the whole or any part of any payment if, in Engineer's opinion, it would be incorrect to make the representations to Owner stated in Paragraph 15.01.C.2.

6. Engineer will recommend reductions in payment (set-offs) necessary in Engineer's opinion to protect Owner from loss because:

a. the Work is defective, requiring correction or replacement;

b. the Contract Price has been reduced by Change Orders;

c. Owner has been required to correct defective Work in accordance with Paragraph 14.07, or has accepted defective Work pursuant to Paragraph 14.04;

d. Owner has been required to remove or remediate a Hazardous Environmental Condition for which Contractor is responsible; or

e. Engineer has actual knowledge of the occurrence of any of the events that would constitute a default by Contractor and therefore justify termination for cause under the Contract Documents.

D. *Payment Becomes Due*

The Application for Payment with Engineer's recommendations will be presented to the Owner and Agency for consideration. If both the Owner and Agency find the Application for Payment acceptable, the recommended amount less any reduction under the provisions of Paragraph 15.01.E will become due ten (10) days after transfer of corresponding funds to the Owner's bank account, and the Owner will make payment to the Contractor.

~~1. Ten days after presentation of the Application for Payment to Owner with Engineer's recommendation, the amount recommended (subject to any Owner set-offs) will become due, and when due will be paid by Owner to Contractor.~~

E. *Reductions in Payment by Owner*

1. In addition to any reductions in payment (set-offs) recommended by Engineer, Owner is entitled to impose a set-off against payment based on any of the following:

a. Claims have been made against Owner based on Contractor's conduct in the performance or furnishing of the Work, or Owner has incurred costs, losses, or damages resulting from Contractor's conduct in the performance or furnishing of the Work, including but not limited to claims, costs, losses, or damages from workplace injuries, adjacent property damage, non-compliance with Laws and Regulations, and patent infringement;

b. Contractor has failed to take reasonable and customary measures to avoid damage, delay, disruption, and interference with other work at or adjacent to the Site;

c. Contractor has failed to provide and maintain required bonds or insurance;

Copyright© 2018 National Society of Professional Engineers, American Council of Engineering Companies, and American Society of Civil Engineers. All rights reserved.

d. Owner has been required to remove or remediate a Hazardous Environmental Condition for which Contractor is responsible;

e. Owner has incurred extra charges or engineering costs related to submittal reviews, evaluations of proposed substitutes, tests and inspections, or return visits to manufacturing or assembly facilities;

f. The Work is defective, requiring correction or replacement;

g. Owner has been required to correct defective Work in accordance with Paragraph 14.07, or has accepted defective Work pursuant to Paragraph 14.04;

h. The Contract Price has been reduced by Change Orders;

i. An event has occurred that would constitute a default by Contractor and therefore justify a termination for cause;

j. Liquidated or other damages have accrued as a result of Contractor's failure to achieve Milestones, Substantial Completion, or final completion of the Work;

k. Liens have been filed in connection with the Work, except where Contractor has delivered a specific bond satisfactory to Owner to secure the satisfaction and discharge of such Liens; or

l. Other items entitle Owner to a set-off against the amount recommended.

2. If Owner imposes any set-off against payment, whether based on its own knowledge or on the written recommendations of Engineer, Owner will give Contractor immediate written notice (with a copy to Engineer) stating the reasons for such action and the specific amount of the reduction, and promptly pay Contractor any amount remaining after deduction of the amount so withheld. Owner shall promptly pay Contractor the amount so withheld, or any adjustment thereto agreed to by Owner and Contractor, if Contractor remedies the reasons for such action. The reduction imposed will be binding on Contractor unless it duly submits a Change Proposal contesting the reduction.

3. Upon a subsequent determination that Owner's refusal of payment was not justified, the amount wrongfully withheld will be treated as an amount due as determined by Paragraph 15.01.D.1 and subject to interest as provided in the Agreement.

15.02 *Contractor's Warranty of Title*

A. Contractor warrants and guarantees that title to all Work, materials, and equipment furnished under the Contract will pass to Owner free and clear of (1) all Liens and other title defects, and (2) all patent, licensing, copyright, or royalty obligations, no later than ~~7 days after~~ the time of payment by Owner.

15.03 *Substantial Completion*

A. When Contractor considers the entire Work ready for its intended use Contractor shall notify Owner and Engineer in writing that the entire Work is substantially complete and request that Engineer issue a certificate of Substantial Completion. Contractor shall at the same time submit to Owner and Engineer an initial draft of punch list items to be completed or corrected before final payment.

B. Promptly after Contractor's notification, Owner, Contractor, and Engineer shall make an inspection of the Work to determine the status of completion. If Engineer does not consider

Copyright© 2018 National Society of Professional Engineers, American Council of Engineering Companies, and American Society of Civil Engineers. All rights reserved.

the Work substantially complete, Engineer will notify Contractor in writing giving the reasons therefor.

1. If some or all of the Work has been determined not to be at a point of Substantial Completion and will require re-inspection or re-testing by Engineer, the cost of such re-inspection or re-testing, including the cost of time, travel and living expenses, shall be paid by Contractor to Owner. If Contractor does not pay, or the parties are unable to agree as to the amount owed, then Owner may impose a reasonable set-off against payments due under Article 15.

C. If Engineer considers the Work substantially complete, Engineer will deliver to Owner a preliminary certificate of Substantial Completion which will fix the date of Substantial Completion. Engineer shall attach to the certificate a punch list of items to be completed or corrected before final payment. Owner shall have 7 days after receipt of the preliminary certificate during which to make written objection to Engineer as to any provisions of the certificate or attached punch list. If, after considering the objections to the provisions of the preliminary certificate, Engineer concludes that the Work is not substantially complete, Engineer will, within 14 days after submission of the preliminary certificate to Owner, notify Contractor in writing that the Work is not substantially complete, stating the reasons therefor. If Owner does not object to the provisions of the certificate, or if despite consideration of Owner's objections Engineer concludes that the Work is substantially complete, then Engineer will, within said 14 days, execute and deliver to Owner and Contractor a final certificate of Substantial Completion (with a revised punch list of items to be completed or corrected) reflecting such changes from the preliminary certificate as Engineer believes justified after consideration of any objections from Owner.

D. At the time of receipt of the preliminary certificate of Substantial Completion, Owner and Contractor will confer regarding Owner's use or occupancy of the Work following Substantial Completion, review the builder's risk insurance policy with respect to the end of the builder's risk coverage, and confirm the transition to coverage of the Work under a permanent property insurance policy held by Owner. Unless Owner and Contractor agree otherwise in writing, Owner shall bear responsibility for security, operation, protection of the Work, property insurance, maintenance, heat, and utilities upon Owner's use or occupancy of the Work.

E. After Substantial Completion the Contractor shall promptly begin work on the punch list of items to be completed or corrected prior to final payment. In appropriate cases Contractor may submit monthly Applications for Payment for completed punch list items, following the progress payment procedures set forth above.

F. Owner shall have the right to exclude Contractor from the Site after the date of Substantial Completion subject to allowing Contractor reasonable access to remove its property and complete or correct items on the punch list.

15.04 *Partial Use or Occupancy*

A. Prior to Substantial Completion of all the Work, Owner may use or occupy any substantially completed part of the Work which has specifically been identified in the Contract Documents, or which Owner, Engineer, and Contractor agree constitutes a separately functioning and usable part of the Work that can be used by Owner for its intended purpose without

Copyright© 2018 National Society of Professional Engineers, American Council of Engineering Companies, and American Society of Civil Engineers. All rights reserved.

significant interference with Contractor's performance of the remainder of the Work, subject to the following conditions:

1. At any time, Owner may request in writing that Contractor permit Owner to use or occupy any such part of the Work that Owner believes to be substantially complete. If and when Contractor agrees that such part of the Work is substantially complete, Contractor, Owner, and Engineer will follow the procedures of Paragraph 15.03.A through 15.03.E for that part of the Work.

2. At any time, Contractor may notify Owner and Engineer in writing that Contractor considers any such part of the Work substantially complete and request Engineer to issue a certificate of Substantial Completion for that part of the Work.

3. Within a reasonable time after either such request, Owner, Contractor, and Engineer shall make an inspection of that part of the Work to determine its status of completion. If Engineer does not consider that part of the Work to be substantially complete, Engineer will notify Owner and Contractor in writing giving the reasons therefor. If Engineer considers that part of the Work to be substantially complete, the provisions of Paragraph 15.03 will apply with respect to certification of Substantial Completion of that part of the Work and the division of responsibility in respect thereof and access thereto.

4. No use or occupancy or separate operation of part of the Work may occur prior to compliance with the requirements of Paragraph 6.04 regarding builder's risk or other property insurance.

15.05 *Final Inspection*

A. Upon written notice from Contractor that the entire Work or an agreed portion thereof is complete, Engineer will promptly make a final inspection with Owner and Contractor and will notify Contractor in writing of all particulars in which this inspection reveals that the Work, or agreed portion thereof, is incomplete or defective. Contractor shall immediately take such measures as are necessary to complete such Work or remedy such deficiencies.

15.06 *Final Payment*

A. *Application for Payment*

1. After Contractor has, in the opinion of Engineer, satisfactorily completed all corrections identified during the final inspection and has delivered, in accordance with the Contract Documents, all maintenance and operating instructions, schedules, guarantees, bonds, certificates or other evidence of insurance, certificates of inspection, annotated record documents (as provided in Paragraph 7.12), and other documents, Contractor may make application for final payment.

2. The final Application for Payment must be accompanied (except as previously delivered) by:

   a. all documentation called for in the Contract Documents;

   b. consent of the surety, if any, to final payment;

   c. satisfactory evidence that all title issues have been resolved such that title to all Work, materials, and equipment has passed to Owner free and clear of any Liens or other title defects, or will so pass upon final payment.

Copyright© 2018 National Society of Professional Engineers, American Council of Engineering Companies, and American Society of Civil Engineers. All rights reserved.

d. a list of all duly pending Change Proposals and Claims; and

e. complete and legally effective releases or waivers (satisfactory to Owner) of all Lien rights arising out of the Work, and of Liens filed in connection with the Work.

3. In lieu of the releases or waivers of Liens specified in Paragraph 15.06.A.2 and as approved by Owner, Contractor may furnish receipts or releases in full and an affidavit of Contractor that: (a) the releases and receipts include all labor, services, material, and equipment for which a Lien could be filed; and (b) all payrolls, material and equipment bills, and other indebtedness connected with the Work for which Owner might in any way be responsible, or which might in any way result in liens or other burdens on Owner's property, have been paid or otherwise satisfied. If any Subcontractor or Supplier fails to furnish such a release or receipt in full, Contractor may furnish a bond or other collateral satisfactory to Owner to indemnify Owner against any Lien, or Owner at its option may issue joint checks payable to Contractor and specified Subcontractors and Suppliers.

B. *Engineer's Review of Final Application and Recommendation of Payment*: If, on the basis of Engineer's observation of the Work during construction and final inspection, and Engineer's review of the final Application for Payment and accompanying documentation as required by the Contract Documents, Engineer is satisfied that the Work has been completed and Contractor's other obligations under the Contract have been fulfilled, Engineer will, within 10 days after receipt of the final Application for Payment, indicate in writing Engineer's recommendation of final payment and present the final Application for Payment to Owner for payment. Such recommendation will account for any set-offs against payment that are necessary in Engineer's opinion to protect Owner from loss for the reasons stated above with respect to progress payments. Otherwise, Engineer will return the Application for Payment to Contractor, indicating in writing the reasons for refusing to recommend final payment, in which case Contractor shall make the necessary corrections and resubmit the Application for Payment.

C. *Notice of Acceptability*: In support of its recommendation of payment of the final Application for Payment, Engineer will also give written notice to Owner and Contractor that the Work is acceptable, subject to stated limitations in the notice and to the provisions of Paragraph 15.07.

D. *Completion of Work*: The Work is complete (subject to surviving obligations) when it is ready for final payment as established by the Engineer's written recommendation of final payment and issuance of notice of the acceptability of the Work.

E. *Final Payment Becomes Due*: Upon receipt from Engineer of the final Application for Payment and accompanying documentation, Owner shall set off against the amount recommended by Engineer for final payment any further sum to which Owner is entitled, including but not limited to set-offs for liquidated damages and set-offs allowed under the provisions of this Contract with respect to progress payments. Owner shall pay the resulting balance due to Contractor within 30 days of Owner's receipt of the final Application for Payment from Engineer.

15.07 *Waiver of Claims*

A. By making final payment, Owner waives its claim or right to liquidated damages or other damages for late completion by Contractor, except as set forth in an outstanding Claim,

Copyright© 2018 National Society of Professional Engineers, American Council of Engineering Companies, and American Society of Civil Engineers. All rights reserved.

appeal under the provisions of Article 17, set-off, or express reservation of rights by Owner. Owner reserves all other claims or rights after final payment.

B. The acceptance of final payment by Contractor will constitute a waiver by Contractor of all claims and rights against Owner other than those pending matters that have been duly submitted as a Claim, or appealed under the provisions of Article 17.

15.08 *Correction Period*

A. If within one year after the date of Substantial Completion (or such longer period of time as may be prescribed ~~by the Supplementary Conditions~~ or the terms of any applicable special guarantee required by the Contract Documents), Owner gives Contractor written notice that any Work has been found to be defective, or that Contractor's repair of any damages to the Site or adjacent areas has been found to be defective, then after receipt of such notice of defect Contractor shall promptly, without cost to Owner and in accordance with Owner's written instructions:

1. correct the defective repairs to the Site or such adjacent areas;
2. correct such defective Work;
3. remove the defective Work from the Project and replace it with Work that is not defective, if the defective Work has been rejected by Owner, and
4. satisfactorily correct or repair or remove and replace any damage to other Work, to the work of others, or to other land or areas resulting from the corrective measures.

B. Owner shall give any such notice of defect within 60 days of the discovery that such Work or repairs is defective. If such notice is given within such 60 days but after the end of the correction period, the notice will be deemed a notice of defective Work under Paragraph 7.17.B.

C. If, after receipt of a notice of defect within 60 days and within the correction period, Contractor does not promptly comply with the terms of Owner's written instructions, or in an emergency where delay would cause serious risk of loss or damage, Owner may have the defective Work corrected or repaired or may have the rejected Work removed and replaced. Contractor shall pay all costs, losses, and damages (including but not limited to all fees and charges of engineers, architects, attorneys, and other professionals and all court or arbitration or other dispute resolution costs) arising out of or relating to such correction or repair or such removal and replacement (including but not limited to all costs of repair or replacement of work of others). Contractor's failure to pay such costs, losses, and damages within 10 days of invoice from Owner will be deemed the start of an event giving rise to a Claim under Paragraph 12.01.B, such that any related Claim must be brought within 30 days of the failure to pay.

D. In special circumstances where a particular item of equipment is placed in continuous service before Substantial Completion of all the Work, the correction period for that item may start to run from an earlier date if so provided in the Specifications.

E. Where defective Work (and damage to other Work resulting therefrom) has been corrected or removed and replaced under this paragraph, the correction period hereunder with respect to such Work will be extended for an additional period of one year after such correction or removal and replacement has been satisfactorily completed.

Copyright© 2018 National Society of Professional Engineers, American Council of Engineering Companies, and American Society of Civil Engineers. All rights reserved.

F. Contractor's obligations under this paragraph are in addition to all other obligations and warranties. The provisions of this paragraph are not to be construed as a substitute for, or a waiver of, the provisions of any applicable statute of limitation or repose.

ARTICLE 16—SUSPENSION OF WORK AND TERMINATION

16.01 *Owner May Suspend Work*

A. At any time and without cause, Owner may suspend the Work or any portion thereof for a period of not more than 90 consecutive days by written notice to Contractor and Engineer. Such notice will fix the date on which Work will be resumed. Contractor shall resume the Work on the date so fixed. Contractor shall be entitled to an adjustment in the Contract Price or an extension of the Contract Times directly attributable to any such suspension. Any Change Proposal seeking such adjustments must be submitted no later than 30 days after the date fixed for resumption of Work.

16.02 *Owner May Terminate for Cause*

A. The occurrence of any one or more of the following events will constitute a default by Contractor and justify termination for cause:

1. Contractor's persistent failure to perform the Work in accordance with the Contract Documents (including, but not limited to, failure to supply sufficient skilled workers or suitable materials or equipment, or failure to adhere to the Progress Schedule);

2. Failure of Contractor to perform or otherwise to comply with a material term of the Contract Documents;

3. Contractor's disregard of Laws or Regulations of any public body having jurisdiction; or

4. Contractor's repeated disregard of the authority of Owner or Engineer.

B. If one or more of the events identified in Paragraph 16.02.A occurs, then after giving Contractor (and any surety) 10 days' written notice that Owner is considering a declaration that Contractor is in default and termination of the Contract, Owner may proceed to:

1. declare Contractor to be in default, and give Contractor (and any surety) written notice that the Contract is terminated; and

2. enforce the rights available to Owner under any applicable performance bond.

C. Subject to the terms and operation of any applicable performance bond, if Owner has terminated the Contract for cause, Owner may exclude Contractor from the Site, take possession of the Work, incorporate in the Work all materials and equipment stored at the Site or for which Owner has paid Contractor but which are stored elsewhere, and complete the Work as Owner may deem expedient.

D. Owner may not proceed with termination of the Contract under Paragraph 16.02.B if Contractor within 7 days of receipt of notice of intent to terminate begins to correct its failure to perform and proceeds diligently to cure such failure.

E. If Owner proceeds as provided in Paragraph 16.02.B, Contractor shall not be entitled to receive any further payment until the Work is completed. If the unpaid balance of the Contract Price exceeds the cost to complete the Work, including all related claims, costs, losses, and damages (including but not limited to all fees and charges of engineers, architects,

Copyright© 2018 National Society of Professional Engineers, American Council of Engineering Companies, and American Society of Civil Engineers. All rights reserved.

attorneys, and other professionals) sustained by Owner, such excess will be paid to Contractor. If the cost to complete the Work including such related claims, costs, losses, and damages exceeds such unpaid balance, Contractor shall pay the difference to Owner. Such claims, costs, losses, and damages incurred by Owner will be reviewed by Engineer as to their reasonableness and, when so approved by Engineer, incorporated in a Change Order. When exercising any rights or remedies under this paragraph, Owner shall not be required to obtain the lowest price for the Work performed.

F. Where Contractor's services have been so terminated by Owner, the termination will not affect any rights or remedies of Owner against Contractor then existing or which may thereafter accrue, or any rights or remedies of Owner against Contractor or any surety under any payment bond or performance bond. Any retention or payment of money due Contractor by Owner will not release Contractor from liability.

G. If and to the extent that Contractor has provided a performance bond under the provisions of Paragraph 6.01.A, the provisions of that bond will govern over any inconsistent provisions of Paragraphs 16.02.B and 16.02.D.

16.03 *Owner May Terminate for Convenience*

A. Upon 7 days' written notice to Contractor and Engineer, Owner may, without cause and without prejudice to any other right or remedy of Owner, terminate the Contract. In such case, Contractor shall be paid for (without duplication of any items):

1. completed and acceptable Work executed in accordance with the Contract Documents prior to the effective date of termination, including fair and reasonable sums for overhead and profit on such Work;

2. expenses sustained prior to the effective date of termination in performing services and furnishing labor, materials, or equipment as required by the Contract Documents in connection with uncompleted Work, plus fair and reasonable sums for overhead and profit on such expenses; and

3. other reasonable expenses directly attributable to termination, including costs incurred to prepare a termination for convenience cost proposal.

B. Contractor shall not be paid for any loss of anticipated profits or revenue, post-termination overhead costs, or other economic loss arising out of or resulting from such termination.

16.04 *Contractor May Stop Work or Terminate*

A. If, through no act or fault of Contractor, (1) the Work is suspended for more than 90 consecutive days by Owner or under an order of court or other public authority, or (2) Engineer fails to act on any Application for Payment within 30 days after it is submitted, or (3) Owner fails for 30 days to pay Contractor any sum finally determined to be due, then Contractor may, upon 7 days' written notice to Owner and Engineer, and provided Owner or Engineer do not remedy such suspension or failure within that time, terminate the contract and recover from Owner payment on the same terms as provided in Paragraph 16.03.

B. In lieu of terminating the Contract and without prejudice to any other right or remedy, if Engineer has failed to act on an Application for Payment within 30 days after it is submitted, or Owner has failed for 30 days to pay Contractor any sum finally determined to be due, Contractor may, 7 days after written notice to Owner and Engineer, stop the Work until payment is made of all such amounts due Contractor, including interest thereon. The

Copyright© 2018 National Society of Professional Engineers, American Council of Engineering Companies, and American Society of Civil Engineers. All rights reserved.

provisions of this paragraph are not intended to preclude Contractor from submitting a Change Proposal for an adjustment in Contract Price or Contract Times or otherwise for expenses or damage directly attributable to Contractor's stopping the Work as permitted by this paragraph.

ARTICLE 17—FINAL RESOLUTION OF DISPUTES

17.01 *Methods and Procedures*

A. *Disputes Subject to Final Resolution*: The following disputed matters are subject to final resolution under the provisions of this article:

1. A timely appeal of an approval in part and denial in part of a Claim, or of a denial in full, pursuant to Article 12; and
2. Disputes between Owner and Contractor concerning the Work, or obligations under the Contract Documents, that arise after final payment has been made.

B. *Final Resolution of Disputes*: For any dispute subject to resolution under this article, Owner or Contractor may:

1. elect in writing to invoke the dispute resolution process provided for~~ in the Supplementary Conditions~~;
2. agree with the other party to submit the dispute to another dispute resolution process; or
3. if no dispute resolution process is provided for ~~in the Supplementary Conditions~~ or mutually agreed to, give written notice to the other party of the intent to submit the dispute to a court of competent jurisdiction.

ARTICLE 18—MISCELLANEOUS

18.01 *Giving Notice*

A. Whenever any provision of the Contract requires the giving of written notice to Owner, Engineer, or Contractor, it will be deemed to have been validly given only if delivered:

1. in person, by a commercial courier service or otherwise, to the recipient's place of business;
2. by registered or certified mail, postage prepaid, to the recipient's place of business; or
3. by e-mail to the recipient, with the words "Formal Notice" or similar in the e-mail's subject line.

18.02 *Computation of Times*

A. When any period of time is referred to in the Contract by days, it will be computed to exclude the first and include the last day of such period. If the last day of any such period falls on a Saturday or Sunday or on a day made a legal holiday by the law of the applicable jurisdiction, such day will be omitted from the computation.

Copyright© 2018 National Society of Professional Engineers, American Council of Engineering Companies, and American Society of Civil Engineers. All rights reserved.

18.03 *Cumulative Remedies*

A. The duties and obligations imposed by these General Conditions and the rights and remedies available hereunder to the parties hereto are in addition to, and are not to be construed in any way as a limitation of, any rights and remedies available to any or all of them which are otherwise imposed or available by Laws or Regulations, by special warranty or guarantee, or by other provisions of the Contract. The provisions of this paragraph will be as effective as if repeated specifically in the Contract Documents in connection with each particular duty, obligation, right, and remedy to which they apply.

18.04 *Limitation of Damages*

A. With respect to any and all Change Proposals, Claims, disputes subject to final resolution, and other matters at issue, neither Owner nor Engineer, nor any of their officers, directors, members, partners, employees, agents, consultants, or subcontractors, shall be liable to Contractor for any claims, costs, losses, or damages sustained by Contractor on or in connection with any other project or anticipated project.

18.05 No Waiver

A. A party's non-enforcement of any provision will not constitute a waiver of that provision, nor will it affect the enforceability of that provision or of the remainder of this Contract.

18.06 *Survival of Obligations*

A. All representations, indemnifications, warranties, and guarantees made in, required by, or given in accordance with the Contract, as well as all continuing obligations indicated in the Contract, will survive final payment, completion, and acceptance of the Work or termination of the Contract or of the services of Contractor.

18.07 *Controlling Law*

A. This Contract is to be governed by the law of the state in which the Project is located.

18.08 Assignment of Contract

A. Unless expressly agreed to elsewhere in the Contract, no assignment by a party to this Contract of any rights under or interests in the Contract will be binding on the other party without the written consent of the party sought to be bound; and, specifically but without limitation, money that may become due and money that is due may not be assigned without such consent (except to the extent that the effect of this restriction may be limited by law), and unless specifically stated to the contrary in any written consent to an assignment, no assignment will release or discharge the assignor from any duty or responsibility under the Contract.

18.09 *Successors and Assigns*

A. Owner and Contractor each binds itself, its successors, assigns, and legal representatives to the other party hereto, its successors, assigns, and legal representatives in respect to all covenants, agreements, and obligations contained in the Contract Documents.

18.10 *Headings*

A. Article and paragraph headings are inserted for convenience only and do not constitute parts of these General Conditions.

Copyright© 2018 National Society of Professional Engineers, American Council of Engineering Companies, and American Society of Civil Engineers. All rights reserved.

Intentionally Blank

"General Decision Number: IL20260017 07/30/2026

State: Illinois

Construction Types: Heavy and Highway

Counties: Illinois Counties of
Bond, Calhoun, Clinton, Greene, Jersey,
Macoupin, Madison, Monroe, Montgomery,
St Clair and Washington

Heavy Construction

Highway Construction

Modification Number	Publication Date
3	01/30/2026
4	05/18/2026
5	07/30/2026

CARP0270-015 05/01/2017

	Rates	Fringes
CARPENTER:MACOUPIN and MONTGOMERY COUNTIES	$ 32.15	25.97
PILEDRIVERMAN:MACOUPIN and MONTGOMERY COUNTIES	$ 33.15	25.97

CARP0270-023 05/15/2020

	Rates	Fringes
CARPENTER (GREENE COUNTY)	$ 35.05	28.57
PILEDRIVERMAN (GREENE COUNTY)	$ 35.05	28.57

CARP0500-001 05/01/2021

	Rates	Fringes
CARPENTER & PILEDRIVERMEN (CLINTON, MONROE, AND WASHINGTON COUNTIES)	$ 41.36	18.90

CARP0500-003 05/01/2021

	Rates	Fringes
CARPENTER AND PILEDRIVER (ST. CLAIR COUNTY)	$ 41.36	18.90

CARP0664-003 05/01/2021

	Rates	Fringes
CARPENTER AND PILEDRIVER (MADISON COUNTY)	$ 41.36	18.90

CARP0664-006 05/01/2021

	Rates	Fringes
CARPENTER (BOND, CALHOUN, AND JERSEY COUNTIES)	$ 41.36	18.90

ELEC0146-012 06/01/2022

	Rates	Fringes
ELECTRICIAN (MONTGGOMERY COUNTY (EAST OF BUTLER		

GROVE, GRISHAM, HILLSBORO & RAYMOND TWPS))..... $ 41.00 20.68

ELEC0193-003 06/03/2024

	Rates	Fringes
ELECTRICIAN (MACOUPIN (BARR, GIRARD, NILWOOD, NORTH & SOUTH OTTER, NORTH & SOUTH PALMYRA AAND VIRDEN TWPS), AND MONTGOMERY (BOIS D' ARC, HARVEL AND PITMAN TWPS) COUNTIES).....	$ 39.80	23.08

ELEC0193-011 01/01/2025

	Rates	Fringes
LINE CONSTRUCTION: GROUNDMAN (CLASS A) (MACOUPIN (TOWNSHIPS OF SCOTTVILLE, NORTH PALMYRA, NORTH OTTER, VIRDEN, GIRARD, BARR, SOUTH PALMYRA, SOUTH OTTER, AND NILWOOD) AND MONTGOMERY (TOWNSHIPS OF BOIS D'ARC, PITMAN, AND HARVEL) COUNTIES).....	$ 38.38	18.82
LINE CONSTRUCTION: GROUNDMAN - EQUIPMENT OPERATOR (CLASS I, ALL CRAWLER TYPE EQUIPMENT LARGER THAN D-4, 15 TON CRANE OR LARGER) (MACOUPIN (TOWNSHIPS OF SCOTTVILLE, NORTH PALMYRA, NORTH OTTER, VIRDEN, GIRARD, BARR, SOUTH PALMYRA, SOUTH OTTER, AND NILWOOD) AND MONTGOMERY (TOWNSHIPS OF BOIS D'ARC, PITMAN, AND HARVEL) COUNTIES).....	$ 56.61	24.20
LINE CONSTRUCTION: GROUNDMAN - TRUCK DRIVER (WITH WINCH, MAY OPERATE DIGGERS, 5TH WHEEL TYPE TRUCKS, CRAWLER-TYPE EQUIPMENT, D-4 AND SMALLER, BACKHOE 3/4 YARD AND UNDER, RUBBER TIRE AND CRAWLER W/END LOADER, AND MAY DRIVE BUCKET TRUCK AND LIVE BOOM TYPE LINE TRUCKS) (MACOUPIN (TOWNSHIPS OF SCOTTVILLE, NORTH PALMYRA, NORTH OTTER, VIRDEN, GIRARD, BARR, SOUTH PALMYRA, SOUTH OTTER, AND NILWOOD) AND MONTGOMERY (TOWNSHIPS OF BOIS D'ARC, PITMAN, AND HARVEL) COUNTIES).....	$ 42.85	20.14
LINE CONSTRUCTION: GROUNDMAN - TRUCK DRIVER (WITHOUT WINCH) (MACOUPIN (TOWNSHIPS OF SCOTTVILLE, NORTH PALMYRA, NORTH OTTER, VIRDEN, GIRARD, BARR, SOUTH PALMYRA, SOUTH OTTER, AND NILWOOD) AND MONTGOMERY (TOWNSHIPS OF BOIS D'ARC, PITMAN, AND HARVEL) COUNTIES).....	$ 40.36	19.41
LINE CONSTRUCTION: LINEMAN & SUBSTATION TECH (MACOUPIN (TOWNSHIPS OF SCOTTVILLE, NORTH PALMYRA, NORTH OTTER, VIRDEN, GIRARD, BARR, SOUTH PALMYRA, SOUTH OTTER, AND NILWOOD) AND MONTGOMERY (TOWNSHIPS OF BOIS D'ARC, PITMAN, AND HARVEL) COUNTIES).....	$ 62.90	26.06

ELEC0309-002 01/06/2025

	Rates	Fringes
LINE CONSTRUCTION: GROUNDMAN (BOND (WESTSIDE), CLINTON, GREENE (ALL WORK PERFORMED ON THE ILLINOIS POWER COMPANY PROPERTY), JERSEY (ALL WORK PERFORMED ON THE ILLINOIS POWER COMPANY PROPERTY), MACOUPIN (EXCEPT NORTH 1/3 & SOUTHWEST CORNER), MADISON (EXCEPT EAST ALTON, ALTON, WOOD RIVER & HARTFORD), MONROE, MONTGOMERY (EAST OF ROUNDTREE, IRVING & EAST FORK TWP.), RANDOLPH (PORTION OF RED BUD TOWNSHIP), ST. CLAIR, AND WASHINGTON (OKAWVILLE & VENEDY TWPS.) COUNTIES).....	$ 42.10	18.84
LINE CONSTRUCTION: GROUNDMAN EQUIPMENT OPERATOR (BOND (WESTSIDE), CLINTON, GREENE (ALL WORK PERFORMED ON THE ILLINOIS POWER COMPANY PROPERTY), JERSEY (ALL WORK PERFORMED ON THE ILLINOIS POWER COMPANY PROPERTY), MACOUPIN (EXCEPT NORTH 1/3 &		

SOUTHWEST CORNER), MADISON (EXCEPT EAST ALTON, ALTON, WOOD RIVER & HARTFORD), MONROE, MONTGOMERY (EAST OF ROUNDTREE, IRVING & EAST FORK TWP.), RANDOLPH (PORTION OF RED BUD TOWNSHIP), ST. CLAIR, AND WASHINGTON (OKAWVILLE & VENEDY TWPS.) COUNT.....$ 56.38 25.23

LINE CONSTRUCTION: GROUNDMAN TRUCK DRIVER (BOND (WESTSIDE), CLINTON, GREENE (ALL WORK PERFORMED ON THE ILLINOIS POWER COMPANY PROPERTY), JERSEY (ALL WORK PERFORMED ON THE ILLINOIS POWER COMPANY PROPERTY), MACOUPIN (EXCEPT NORTH 1/3 & SOUTHWEST CORNER), MADISON (EXCEPT EAST ALTON, ALTON, WOOD RIVER & HARTFORD), MONROE, MONTGOMERY (EAST OF ROUNDTREE, IRVING & EAST FORK TWP.), RANDOLPH (PORTION OF RED BUD TOWNSHIP), ST. CLAIR, AND WASHINGTON (OKAWVILLE & VENEDY TWPS.) COUNTIES).....$ 46.03 20.60

LINE CONSTRUCTION: LINEMAN (BOND (WESTSIDE), CLINTON, GREENE (ALL WORK PERFORMED ON THE ILLINOIS POWER COMPANY PROPERTY), JERSEY (ALL WORK PERFORMED ON THE ILLINOIS POWER COMPANY PROPERTY), MACOUPIN (EXCEPT NORTH 1/3 & SOUTHWEST CORNER), MADISON (EXCEPT EAST ALTON, ALTON, WOOD RIVER & HARTFORD), MONROE, MONTGOMERY (EAST OF ROUNDTREE, IRVING & EAST FORK TWP.), RANDOLPH (PORTION OF RED BUD TOWNSHIP), ST. CLAIR, AND WASHINGTON (OKAWVILLE & VENEDY TWPS.) COUNTIES).....$ 64.83 29.01

ELEC0309-003 09/01/2025

	Rates	Fringes
ELECTRICIAN (BOND (WESTERN HALF), CLINTON (EXCLUDES HUEY, HOFFMAN, & VIC.), MACOUPIN (EXCLUDES BRIGHTON TWP., ATHENVILLE, SCOTTVILLE, GIRARD & AREA N. THEREOF), MADISON (EXCLUDES ALTON, E. ALTON, HARTFORD & WOOD RIVER), MONROE, MONTGOMERY (WEST OF BUTLER GROVE, GRISHAM, HILLSBOROUGH & RAYMOND TWPS), ST. CLAIR AND WASHINGTON (VENEDY TWP) COUNTIES).....	$ 52.41	30.27

ELEC0649-002 01/05/2026

	Rates	Fringes
LINE CONSTRUCTION: BLASTER (CALHOUN, GREENE, JERSEY, MACOUPIN (SOUTHWEST CORNER), AND MADISON (E. ALTON, ALTON, WOOD RIVER & HARTFORD) COUNTIES)..	$ 66.70	30.84
LINE CONSTRUCTION: EQUIPMENT OPERATOR (CALHOUN, GREENE, JERSEY, MACOUPIN (SOUTHWEST CORNER), AND MADISON (E. ALTON, ALTON, WOOD RIVER & HARTFORD) COUNTIES).....	$ 57.12	28.06
LINE CONSTRUCTION: GROUNDMAN (CALHOUN, GREENE, JERSEY, MACOUPIN (SOUTHWEST CORNER), AND MADISON (E. ALTON, ALTON, WOOD RIVER & HARTFORD) COUNTIES)..	$ 36.67	22.13
LINE CONSTRUCTION: GROUNDMAN - TRUCK DRIVER W/WINCH (CALHOUN, GREENE, JERSEY, MACOUPIN (SOUTHWEST CORNER), AND MADISON (E. ALTON, ALTON, WOOD RIVER & HARTFORD) COUNTIES).....	$ 42.66	23.87
LINE CONSTRUCTION: GROUNDMAN - TRUCK DRIVER WO/WINCH (CALHOUN, GREENE, JERSEY, MACOUPIN (SOUTHWEST CORNER), AND MADISON (E. ALTON, ALTON, WOOD RIVER & HARTFORD) COUNTIES).....	$ 37.67	22.42
LINE CONSTRUCTION: LINEMAN; AND LINEMAN HOLE BORING MACHINE OPERATOR (CALHOUN, GREENE, JERSEY, MACOUPIN (SOUTHWEST CORNER), AND MADISON (E. ALTON, ALTON, WOOD RIVER & HARTFORD) COUNTIES).....	$ 66.70	30.84

ELEC0649-008 12/28/2025

	Rates	Fringes
ELECTRICIAN (CALHOUN, GREEN, JERSEY, MACOUPIN (SOUTHWEST CORNER), AND MADISON (ALTON, E. ALTON, HARTFORD & WOOD RIVER) COUNTIES)	$ 54.53	29.46

ELEC0702-002 01/06/2025

	Rates	Fringes
LINE CONSTRUCTION: GROUNDMAN - CLASS A (ALEXANDER, CLAY, CRAWFORD, EDWARDS, EFFINGHAM, FRANKLIN, FAYETTE (EXCLUDES PORTION NORTH AVENA), GALLATIN, HAMILTON, HARDIN, JACKSON, JASPER, JEFFERSON, JOHNSON, LAWRENCE, MARION, MASSAC, PERRY, POPE, PULASKI, RANDOLPH (EXCEPT RED BUD TWPS), RICHLAND, SALINE, UNION, WABASH, WAYNE, WHITE, AND WILLIAMSON COUNTIES; CLARK, COLES (SOUTHERN HALF), CUMBERLAND, MOULTRIE (WHITLEY TWP), AND SHELBY (EXCEPT WEST OF HOLLAND, PRAIRIE, RICHLAND, & WINDSOR TWPS) COU	$ 38.18	19.92
LINE CONSTRUCTION: GROUNDMAN - EQUIPMENT OPERATOR CLASS II (ALL OTHER EQUIPMENT) (ALEXANDER, CLAY, CRAWFORD, EDWARDS, EFFINGHAM, FRANKLIN, FAYETTE (EXCLUDES PORTION NORTH AVENA), GALLATIN, HAMILTON, HARDIN, JACKSON, JASPER, JEFFERSON, JOHNSON, LAWRENCE, MARION, MASSAC, PERRY, POPE, PULASKI, RANDOLPH (EXCEPT RED BUD TWPS), RICHLAND, SALINE, UNION, WABASH, WAYNE, WHITE, AND WILLIAMSON COUNTIES; CLARK, COLES (SOUTHERN HALF), CUMBERLAND, MOULTRIE (WHITLEY TWP), AND SHELBY (EXCEPT WEST OF HOLLAND,	$ 46.49	22.33
LINE CONSTRUCTION: HEAVY - EQUIPMENT OPERATOR CLASS I (ALL CRAWLER TYPE EQUIPMENT D-4 AND LARGER) (ALEXANDER, CLAY, CRAWFORD, EDWARDS, EFFINGHAM, FRANKLIN, FAYETTE (EXCLUDES PORTION NORTH AVENA), GALLATIN, HAMILTON, HARDIN, JACKSON, JASPER, JEFFERSON, JOHNSON, LAWRENCE, MARION, MASSAC, PERRY, POPE, PULASKI, RANDOLPH (EXCEPT RED BUD TWPS), RICHLAND, SALINE, UNION, WABASH, WAYNE, WHITE, AND WILLIAMSON COUNTIES; CLARK, COLES (SOUTHERN HALF), CUMBERLAND, MOULTRIE (WHITLEY TWP), AND SHELBY (EXCEPT	$ 52.13	23.97

ELEC0702-017 01/01/2025

	Rates	Fringes
ELECTRICIAN (BOND (EASTERN HALF), CLINTON (HUEY, HOFFMAN, & VICINITY), AND WASHINGTON (EXCEPT VENEDY TWP) COUNTIES)	$ 52.14	29.14

ENGI0520-005 08/01/2022

	Rates	Fringes
POWER EQUIPMENT OPERATOR GROUP 10 CERTIFIED CRANE OPERATORS 17.5 TONS AND ABOVE, WHEN REQUESTED BY THE CONTRACTOR OR REQUIRED BY THE OWNER	$ 46.75	34.95
POWER EQUIPMENT OPERATOR GROUP 11 MASTER MECHANIC	$ 44.45	34.95
POWER EQUIPMENT OPERATOR GROUP 12 LICENSED BOAT PILOT	$ 45.45	34.95
POWER EQUIPMENT OPERATOR, INCLUDING BUILDING CONSTRUCTION ON HEAVY INDUSTRIAL SITES & HEAVY CONSTRUCTION EXCEPT DREDGING AND RIVER WORK: GROUP 11 MASTER MECHANIC	$ 44.45	34.95
POWER EQUIPMENT OPERATOR, INCLUDING BUILDING		

CONSTRUCTION ON HEAVY INDUSTRIAL SITES & HEAVY
CONSTRUCTION EXCEPT DREDGING AND RIVER WORK: GROUP
12 LICENSED BOAT PILOT.....$ 45.45 34.95
POWER EQUIPMENT OPERATOR: GROUP 01 CRANES,
DRAGLINES, SHOVELS, SKIMMER SCOOPS, CLAMSHELLS OR
DERRICK BOATS, PILE DRIVERS, CRANE-TYPE BACKHOES,
ASPHALT PLANT OPERATORS, CONCRETE PLANT OPERATORS,
DREDGES, ASPHALT SPREADING MACHINES, SCREWS ON
ASPHALT SPREADING MACHINES, ALL LOCOMOTIVES, CABLE
WAYS OR TOWER MACHINES, HOISTS, HYDRAULIC BACKHOES,
DITCHING MACHINES, OR BACKFILLER, CHERRYPICKERS,
OVERHEAD CRANES, ROLLER, STEAM OR GAS, CONCRETE
PAVERS, EXCAVATOR CONCRETE BREAKERS, CONCRETE
PUMPS, BULK CEMENT PLANTS, CEMENT PUMPS,
DERRICKTYPE DRILLS, BOAT OPERATORS, MOTOR GRADERS
OR PUSHCATS, SCOOPS OR TOUMAPULLS, BULLDOZERS,
ENDLOADERS OR FORK LIFTS, POWER BLADE OR ELEVATING
GRADERS, WINCH CATS, BOOM OR WINCH TRUCKS OR BOOM
TRACTORS, PIPE WRAPPING OR PAINTING MACHINES,
ASPHALT PLANT ENGINEER, JOURNEYMAN LUBRICATING
ENGINEER, DRILLS (OTHER THAN DERRICK TYPE), MUD
JACKS, OR WELL DRILLING MACHINES, BORING MACHINES
OR TRACK JACKS, MIXERS, CONVEYORS (TWO), AIR
COMPRESSORS (TWO) WATER PUMPS, REGARDLESS OF SIZE
(TWO), WELDING MACHINES (TWO), SIPHONS OR JETS
(TWO), WINCH HEAD OR APPARATUSES (TWO), LIGHT
PLANTS (TWO), WATERBLASTERS (TWO), ALL TRACTORS,
REGARDLESS OF SIZE (STRAIGHT TRACTOR ONLY), FIREMAN
ON STATIONARY BOILERS, AUTOMATIC ELEVATORS, FORM
GRADING MACHINES, FINISHING MACHINES, POWER
SUB-GRADER OR RIBBON MACHINES, LONGITUDINAL FLOATS,
DISTRIBUTOR OPERATORS ON TRUCKS, WINCH HEADS OR
APPARATUSES (ONE), MOBIL TRACK AIR AND HEATERS (TWO
TO FIVE), HEAVY EQUIPMENT GREASER, RELIEF OPERATOR,
ASSISTANT MASTER MECHANIC AND HEAVY DUTY MECHANIC,
CONCRETE SAWS OF ALL TYPES AND SIZES WITH THEIR
ATTACHMENTS, GOBHOPPERS, EXCAVATORS ALL SIZES, THE
REPAIR, GREASING, AND FUELING OF ALL DIESEL
HAMMERS, THE OPERATION, SET-UP AND CLEANING
OFBIDWELLS, CONCRETE PLACEMENT BOOMS, THE
ALTERATIONS, REPAIR OF ALL BARGES, WATER BLASTERS
OF ALL SIZES AND THEIR CLUTCHES, MOBILE LIFTS,
HYDRAULIC JACKS WHERE USED FOR HOISTING, DIESEL OR
GAS POWERED FLASHING SINGS USED FOR TRAFFIC
CONTROL, MICRO PAVERS, LOG SKIDERS, ICEOLATORS USED
ON AND OFF OF PIPELINE, CONDOR CRANES, DRILL RIGS
OF ALL SIZES, BOW BOATS, SURVEY BOATS, ROSS
CARRIERS, BOB-CATS AND ALL THEIR ATTACHMENTS, SKID
STEER LOADERS AND ALL THEIR ATTACHMENTS, CRETER
CRANE, DIRECT DRIVE ELECTRIC MOTORS THE BOLTING AND
UNBOLTING THE ADJUSTING AND SHIMMING,
(DEWATERINGJOBS, WHIRLEY CRANE, CONVEYOR BELTS)
ETC., BATCH PLANTS (ALL SIZES), ROTO MILLS,
CONVEYORS SYSTEMS OF ANY SIZE AND ANY
CONFIGURATION, HYDROSEEDERS AND STRAWBLOWERS ALL
SIZES, OPERATION, REPAIR, SERVICE OF ALL VIBRATORY
HAMMERS, ALL POWER PACS AND THEIR CONTROLS
REGARDLESS OF LOCATION, CURTAINS OR BRUSH BURNING
MACHINES, STUMP CUTTER MACHINES, GROUT MACHINES
REGARDLESS OF SIZE, NAIL LAUNCHERS WHEN MOUNTED ON
A MACHINE OR SELF-PROPELLED, CON-COVER MACHINES,
GOLDHOFER AND SIMILAR S.P.M.T. (SELF-PROPELLED
MODULAR TRANSPMIERS) HEAVY TRANSPORT UNITS AND ALL
OPERATORS (EXCEPT THOSE LISTED BELOW).....$ 42.45 34.95
POWER EQUIPMENT OPERATOR: GROUP 01 CRANES,

DRAGLINES, SHOVELS, SKIMMER SCOOPS, CLAMSHELLS OR DERRICK BOATS, PILE DRIVERS, CRANE-TYPE BACKHOES, ASPHALT PLANT OPERATORS, CONCRETE PLANT OPERATORS, DREDGES, ASPHALT SPREADING MACHINES, SCREWS ON ASPHALT SPREADING MACHINES, ALL LOCOMOTIVES, CABLE WAYS OR TOWER MACHINES, HOISTS, HYDRAULIC BACKHOES, DITCHING MACHINES, OR BACKFILLER, CHERRYPICKERS, OVERHEAD CRANES, ROLLER, STEAM OR GAS, CONCRETE PAVERS, EXCAVATOR CONCRETE BREAKERS, CONCRETE PUMPS, BULK CEMENT PLANTS, CEMENT PUMPS, DERRICK-TYPE DRILLS, BOAT OPERATORS, MOTOR GRADERS OR PUSHCATS, SCOOPS OR TOURNAPULLS, BULLDOZERS, ENDLOADERS OR FORK LIFTS, POWER BLADE OR ELEVATING GRADERS, WINCH CATS, BOOM OR WINCH TRUCKS OR BOOM TRACTORS, PIPE WRAPPING OR PAINTING MACHINES, ASPHALT PLANT ENGINEER, JOURNEYMAN LUBRICATING ENGINEER, DRILLS (OTHER THAN DERRICK TYPE), MUD JACKS, OR WELL DRILLING MACHINES, BORING MACHINES OR TRACK JACKS, MIXERS, CONVEYORS (TWO), AIR COMPRESSORS (TWO) WATER PUMPS, REGARDLESS OF SIZE (TWO), WELDING MACHINES (TWO), SIPHONS OR JETS (TWO), WINCH HEAD OR APPARATUSES (TWO), LIGHT PLANTS (TWO), WATERBLASTERS (TWO), ALL TRACTORS, REGARDLESS OF SIZE (STRAIGHT TRACTOR ONLY), FIREMAN ON STATIONARY BOILERS, AUTOMATIC ELEVATORS, FORM GRADING MACHINES, FINISHING MACHINES, POWER SUB-GRADER OR RIBBON MACHINES, LONGITUDINAL FLOATS, DISTRIBUTOR OPERATORS ON TRUCKS, WINCH HEADS OR APPARATUSES (ONE), MOBIL TRACK AIR AND HEATERS (TWO TO FIVE), HEAVY EQUIPMENT GREASER, RELIEF OPERATOR, ASSISTANT MASTER MECHANIC AND HEAVY DUTY MECHANIC, CONCRETE SAWS OF ALL TYPES AND SIZES WITH THEIR ATTACHMENTS, GOB-HOPPERS, EXCAVATORS ALL SIZES, THE REPAIR, GREASING, AND FUELING OF ALL DIESEL HAMMERS, THE OPERATION, SET-UP AND CLEANING OF BIDWELLS, CONCRETE PLACEMENT BOOMS, THE ALTERATIONS, REPAIR OF ALL BARGES, WATER BLASTERS OF ALL SIZES AND THEIR CLUTCHES, MOBILE LIFTS, HYDRAULIC JACKS WHERE USED FOR HOISTING, DIESEL OR GAS POWERED FLASHING SIGNS USED FOR TRAFFIC CONTROL, MICRO PAVERS, LOG SKIDERS, ICEOLATORS USED ON AND OFF OF PIPELINE, CONDOR CRANES, DRILL RIGS OF ALL SIZES, BOW BOATS, SURVEY BOATS, ROSS CARRIERS, BOB-CATS AND ALL THEIR ATTACHMENTS, SKID STEER LOADERS AND ALL THEIR ATTACHMENTS, CRETER CRANE, DIRECT DRIVE ELECTRIC MOTORS THE BOLTING AND UNBOLTING THE ADJUSTING AND SHIMMING, (DEWATERINGJOBS, WHIRLEY CRANE, CONVEYOR BELTS) ETC., BATCH PLANTS (ALL SIZES), ROTO MILLS, CONVEYORS SYSTEMS OF ANY SIZE AND ANY CONFIGURATION, HYDROSEEDERS AND STRAW-BLOWERS ALL SIZES, OPERATION, REPAIR, SERVICE OF ALL VIBRATORY HAMMERS, ALL POWER PACS AND THEIR CONTROLS REGARDLESS OF LOCATION, CURTAINS OR BRUSH BURNING MACHINES, STUMP CUTTER MACHINES, GROUT MACHINES REGARDLESS OF SIZE, NAIL LAUNCHERS WHEN MOUNTED ON A MACHINE OR SELF-PROPELLED, CON-COVER MACHINES, GOLDHOFER AND SIMILAR S.P.M.T. (SELF-PROPELLED MODULAR TRANSPORTERS) HEAVY TRANSPORT UNITS AND ALL OPERATORS (EXCEPT THOSE LISTED BELOW).
INCLUDING BUILDING CONSTRUCTION ON HEAVY INDUSTRIAL SITES & HEAVY CONSTRUCTION EXCEPT DREDGING AND RIVER WORK.....$ 42.45 34.95
POWER EQUIPMENT OPERATOR: GROUP 02 ASSISTANT OPERATORS.....$ 41.32 34.95

POWER EQUIPMENT OPERATOR: GROUP 02 ASSISTANT
OPERATORS INCLUDING BUILDING CONSTRUCTION ON
HEAVY INDUSTRIAL SITES & HEAVY CONSTRUCTION EXCEPT
DREDGING AND RIVER WORK .....$ 41.32 34.95
POWER EQUIPMENT OPERATOR: GROUP 03 AIR COMPRESSOR
ONE; WATER PUMP REGARDLESS OF SIZE ONE; WELDING
MACHINE ONE; 1-BAG MIXER ONE; CONVEYOR ONE; SIPHON
OR JET; LIGHT PLANT ONE; HEATER ONE; IMMOBILE TRACK
AIR ONE.....$ 36.84 34.95
POWER EQUIPMENT OPERATOR: GROUP 03 AIR COMPRESSORS
(ONE), WATER PUMPS, REGARDLESS OF SIZE (ONE),
WATER-BLASTERS (ONE), WELDING MACHINE (ONE), MIXERS
(ONE BAG), CONVEYOR (ONE), SIPHON OR JET (ONE),
LIGHT PLANT (ONE), HEATER (ONE), IMMOBILE TRACK AIR
(ONE), AND SELF-PROPELLED WALK BEHIND ROLLERS.
INCLUDING BUILDING CONSTRUCTION ON HEAVY INDUSTRIAL
SITES & HEAVY CONSTRUCTION EXCEPT DREDGING AND
RIVER WORK .....$ 36.84 34.95
POWER EQUIPMENT OPERATOR: GROUP 04 FIREMAN ON
WHIRLIES AND HEAVY EQUIPMENT OILERS, TRUCK CRANES,
DREDGES, MONIGANS, LARGE CRANES - (OVER 65-TON
RATED CAPACITY) CONCRETE PLANT OILER, BLACKTOP
PLANT OILER AND CRETER CRANE OILER (WHEN REQUIRED),
BARGE TENDERS, OILERS ON DRILL RIGS USED FOR
CAISSON OR FOR PILE DRIVING. INCLUDING BUILDING
CONSTRUCTION ON HEAVY INDUSTRIAL SITES & HEAVY
CONSTRUCTION EXCEPT DREDGING AND RIVER WORK.....$ 43.45 34.95
POWER EQUIPMENT OPERATOR: GROUP 04 FIREMEN ON
WHIRLIES AND ASPHALT SPREADER OILER; HEAVY
EQUIPMENT OILERS; TRUCK CRANES; MONIGANS; LARGE
OVER 65 TONS CAPACITY; CONCRETE PLANT OILER AND
BLACK TOP PLANT OILER.....$ 43.45 34.95
POWER EQUIPMENT OPERATOR: GROUP 05 OILERS.....$ 44.45 34.95
POWER EQUIPMENT OPERATOR: GROUP 05 OILERS
INCLUDING BUILDING CONSTRUCTION ON HEAVY INDUSTRIAL
SITES & HEAVY CONSTRUCTION EXCEPT DREDGING AND
RIVER WORK.....$ 44.45 34.95
POWER EQUIPMENT OPERATOR: GROUP 06 OPERATORS ON
EQUIPMENT WITH BOOMS, INCLUDING JIBS, 100 FT AND
OVER, BUT LESS THAN 150 FT.....$ 45.00 34.95
POWER EQUIPMENT OPERATOR: GROUP 06 OPERATORS ON
EQUIPMENT WITH BOOMS, INCLUDING JIBS, 100 FT AND
OVER, BUT LESS THAN 150 FT INCLUDING BUILDING
CONSTRUCTION ON HEAVY INDUSTRIAL SITES & HEAVY
CONSTRUCTION EXCEPT DREDGING AND RIVER WORK.....$ 45.00 34.95
POWER EQUIPMENT OPERATOR: GROUP 07 OPERATORS ON
EQUIPMENT WITH BOOMS, INCLUDING JIBS, 150 FT AND
OVER, BUT LESS THAN 200 FT.....$ 45.30 34.95
POWER EQUIPMENT OPERATOR: GROUP 08 OPERATORS ON
EQUIPMENT WITH BOOMNS, INCLUDING JIBS, 200 FT AND
OVER; TOWER CRANES, AND WHIRLEY CRANES.....$ 45.60 34.95
POWER EQUIPMENT OPERATOR: GROUP 09 CERTIFIED CRANE
OPERATORS, BELOW 17.5 TONS, WHEN REQUESTED BY THE
CONTRACTOR OR REQUIRED BY THE OWNER INCLUDING
BUILDING CONSTRUCTION ON HEAVY INDUSTRIAL SITES &
HEAVY CONSTRUCTION EXCEPT DREDGING AND RIVER WORK...$ 46.25 34.95
POWER EQUIPMENT OPERATOR: GROUP 09 CERTIFIED CRANE
OPERATORS, BELOW 17.5 TONS, WHEN REQUESTED BY THE
CONTRACTOR OR REQUIRED BY THE OWNER.....$ 46.25 34.95

ENGI0520-012 08/01/2025

Rates Fringes

POWER EQUIPMENT OPERATOR GROUP 01 (INCLUDING
BUILDING CONSTRUCTION ON HEAVY INDUSTRIAL SITES &

HEAVY CONSTRUCTION EXCEPT DREDGING AND RIVER WORK)..$ 47.20 39.10
POWER EQUIPMENT OPERATOR GROUP 02 (INCLUDING
BUILDING CONSTRUCTION ON HEAVY INDUSTRIAL SITES &
HEAVY CONSTRUCTION EXCEPT DREDGING AND RIVER WORK)..$ 46.07 39.10
POWER EQUIPMENT OPERATOR GROUP 03 (INCLUDING
BUILDING CONSTRUCTION ON HEAVY INDUSTRIAL SITES &
HEAVY CONSTRUCTION EXCEPT DREDGING AND RIVER WORK)..$ 41.59 39.10
POWER EQUIPMENT OPERATOR GROUP 04 (INCLUDING
BUILDING CONSTRUCTION ON HEAVY INDUSTRIAL SITES &
HEAVY CONSTRUCTION EXCEPT DREDGING AND RIVER WORK)..$ 41.65 39.10
POWER EQUIPMENT OPERATOR GROUP 05 (INCLUDING
BUILDING CONSTRUCTION ON HEAVY INDUSTRIAL SITES &
HEAVY CONSTRUCTION EXCEPT DREDGING AND RIVER WORK)..$ 41.65 39.10
POWER EQUIPMENT OPERATOR GROUP 06 (INCLUDING
BUILDING CONSTRUCTION ON HEAVY INDUSTRIAL SITES &
HEAVY CONSTRUCTION EXCEPT DREDGING AND RIVER WORK)..$ 49.75 39.10
POWER EQUIPMENT OPERATOR GROUP 09 (INCLUDING
BUILDING CONSTRUCTION ON HEAVY INDUSTRIAL SITES &
HEAVY CONSTRUCTION EXCEPT DREDGING AND RIVER WORK)..$ 48.20 39.10
POWER EQUIPMENT OPERATOR GROUP 11 (INCLUDING
BUILDING CONSTRUCTION ON HEAVY INDUSTRIAL SITES &
HEAVY CONSTRUCTION EXCEPT DREDGING AND RIVER WORK)..$ 49.20 39.10
POWER EQUIPMENT OPERATOR GROUP 12 (INCLUDING
BUILDING CONSTRUCTION ON HEAVY INDUSTRIAL SITES &
HEAVY CONSTRUCTION EXCEPT DREDGING AND RIVER WORK)..$ 50.20 39.10

IRON0046-006 05/01/2024

	Rates	Fringes
IRONWORKER (GREENE (NORTHERN HALF), MACOUPIN (NORTH OF SUMMERVILLE), AND MONTGOMERY (NORTH OF LITCHFIELD & HILLSBORO) COUNTIES)	$ 37.60	32.94

IRON0392-003 08/01/2024

	Rates	Fringes
IRONWORKER (BOND, CALHOUN, CLINTON, GREENE (SOUTHERN HALF), JERSEY, MACOUPIN (SUMMERVILLE & SOUTH THEREOF), MADISON, MONROE, MONTGOMERY (LITCHFIELD, HILLSBORO, & SOUTH THEREOF), ST. CLAIR, AND WASHINGTON COUNTIES)	$ 41.65	31.18

IRON0396-006 08/06/2025

	Rates	Fringes
IRONWORKER (BRIDGES, LOCKS, AND DAMS ON THE MISSISSIPPI RIVER)	$ 44.27	31.65

LABO0044-001 08/01/2024

	Rates	Fringes
LABORER GROUP 1 GENERAL LABORER (MADISON COUNTY (SOUTHWEST))	$ 32.35	32.38
LABORER GROUP 2 ASBESTOS ABATEMENT WORKER AND HAZARDOUS WASTE WORKER; LEAD BASE PAINT WORKER; MASON AND PLASTERER TENDER (MADISON COUNTY (SOUTHWEST))	$ 32.85	32.38
LABORER GROUP 3 DYNAMITE MAN AND POWDER MAN (MADISON COUNTY (SOUTHWEST))	$ 33.85	32.38

LABO0044-002 08/01/2024

	Rates	Fringes
LABORER GROUP 1 GENERAL LABORERS. (MADISON COUNTY (GLEN CARBON))	$ 32.35	32.38

LABORER GROUP 2 BRICK MASON AND PLASTERER
TENDERS; ASBESTOS ABATEMENT WORKER, HAZARDOUS WASTE
WORKER (MADISON COUNTY (GLEN CARBON))..... $ 32.85 32.38
LABORER GROUP 3 DYNAMITE AND POWDER MEN. (MADISON
COUNTY (GLEN CARBON))..... $ 33.85 32.38

LABO0100-001 08/01/2024

	Rates	Fringes
LABORERS, GROUP 1 GENERAL LABORER (ST CLAIR COUNTY (EAST ST. LOUIS,ALCOA, BROOKLYN,CAHOKIA, CASEYVILLE,CENTREVILLE, DUPO, FAIRMONT CITY, FRENCH VILLAGE, MIDWAY, MAPLEWOOD, NATIONAL CITY)).....	$ 35.38	29.35
LABORERS, GROUP 2 ASBESTOS ABATEMENT WORKER AND HAZARDOUS WASTE WORKER; LEAD BASE PAINT WORKER, HOD CARRIER (ST CLAIR COUNTY (EAST ST. LOUIS,ALCOA, BROOKLYN,CAHOKIA, CASEYVILLE,CENTREVILLE, DUPO, FAIRMONT CITY, FRENCH VILLAGE, MIDWAY, MAPLEWOOD, NATIONAL CITY)).....	$ 35.88	29.35
LABORERS, GROUP 3 DYNAMITE MAN (ST CLAIR COUNTY (EAST ST. LOUIS,ALCOA, BROOKLYN,CAHOKIA, CASEYVILLE,CENTREVILLE, DUPO, FAIRMONT CITY, FRENCH VILLAGE, MIDWAY, MAPLEWOOD, NATIONAL CITY)).....	$ 36.88	29.35

LABO0100-002 08/01/2024

	Rates	Fringes
LABORERS, GROUP 1 GENERAL LABORER (ST CLAIR (O'FALLON, SCOTT AIR FORCE BASE, SHILOH, LEBANON & VINCINITY), CLINTON (TRENTON & VICINITY), AND MADISON (TROY) COUNTIES).....	$ 35.38	29.35
LABORERS, GROUP 2 ASBESTOS ABATEMENT WORKER AND HAZARDOUS WASTE WORKER; LEAD BASE PAINT WORKER (ST CLAIR (O'FALLON, SCOTT AIR FORCE BASE, SHILOH, LEBANON & VINCINITY), CLINTON (TRENTON & VICINITY), AND MADISON (TROY) COUNTIES).....	$ 35.88	29.35
LABORERS, GROUP 3 DYNAMITE MAN (ST CLAIR (O'FALLON, SCOTT AIR FORCE BASE, SHILOH, LEBANON & VINCINITY), CLINTON (TRENTON & VICINITY), AND MADISON (TROY) COUNTIES).....	$ 36.88	29.35

LABO0100-005 08/01/2024

	Rates	Fringes
LABORER GROUP 1 GENERAL LABORERS. (MADISON COUNTY (ST. JACOB)).....	$ 35.38	29.35
LABORER GROUP 2 BRICK MASON AND PLASTERER TENDERS. (MADISON COUNTY (ST. JACOB)).....	$ 35.88	29.35
LABORER GROUP 3 DYNAMITE AND POWDER MEN. (MADISON COUNTY (ST. JACOB)).....	$ 36.88	29.35

LABO0196-001 08/01/2024

	Rates	Fringes
LABORERS, GROUP 1 GENERAL LABORER (MONROE COUNTY)...	$ 32.81	31.92
LABORERS, GROUP 2 ASBESTOS ABATEMENT WORKER AND HAZARDOUS WASTE WORKER; LEAD BASE PAINT WORKER (MONROE COUNTY).....	$ 33.31	31.92
LABORERS, GROUP 3 DYNAMITE MAN AND POWDER MAN (MONROE COUNTY).....	$ 34.31	31.92

LABO0218-001 08/01/2022

	Rates	Fringes
LABORERS, GROUP 1 GENERAL LABORER (BOND		

(GREENEVILLE), CALHOUN (HARDIN), GREENE
(ROADHOUSE), JERSEY (JERSEYVILLE), AND MADISON
(ALTON) COUNTIES).....$ 32.84 27.89
LABORERS, GROUP 2ASBESTOS ABATEMENT WORKER AND
HAZARDOUS WASTE WORKER; LEAD BASE PAINT WORKER
(BOND (GREENEVILLE), CALHOUN (HARDIN), GREENE
(ROADHOUSE), JERSEY (JERSEYVILLE), AND MADISON
(ALTON) COUNTIES).....$ 33.34 27.89
LABORERS, GROUP 3 DYNAMITE MAN AND POWDER MAN (BOND
(GREENEVILLE), CALHOUN (HARDIN), GREENE
(ROADHOUSE), JERSEY (JERSEYVILLE), AND MADISON
(ALTON) COUNTIES).....$ 34.34 27.89

LABO0218-004 08/01/2022

	Rates	Fringes
LABORER GROUP 1 GENERAL LABORERS. (JERSEY COUNTY (JERSEYVILLE))	$ 32.84	27.89
LABORER GROUP 2 BRICK MASON AND PLASTERER TENDERS. (JERSEY COUNTY (JERSEYVILLE))	$ 33.34	27.89
LABORER GROUP 3 DYNAMITE AND POWDER MEN. (JERSEY COUNTY (JERSEYVILLE))	$ 34.34	27.89

LABO0218-005 08/01/2022

	Rates	Fringes
LABORER GROUP 1 GENERAL LABORERS. (GREENE COUNTY (ROADHOUSE))	$ 32.84	27.89
LABORER GROUP 2 BRICK MASON AND PLASTERER TENDERS. (GREENE COUNTY (ROADHOUSE))	$ 33.34	27.89
LABORER GROUP 3 DYNAMITE AND POWDER MEN. (GREENE COUNTY (ROADHOUSE))	$ 34.34	27.89

LABO0218-006 08/01/2022

	Rates	Fringes
LABORER GROUP 1 GENERAL LABORERS. (CALHOUN COUNTY (HARDIN))	$ 32.84	27.89
LABORER GROUP 2 BRICK MASON AND PLASTERER TENDERS. (CALHOUN COUNTY (HARDIN))	$ 33.34	27.89
LABORER GROUP 3 DYNAMITE AND POWDER MEN. (CALHOUN COUNTY (HARDIN))	$ 34.34	27.89

LABO0218-007 08/01/2022

	Rates	Fringes
LABORER: GROUP 1 :: CALHOUN COUNTY (Hardin) LABORERS CLASSIFICATIONS GROUP 1 - General Laborers. GROUP 2 - Brick Mason and Plasterer Tenders GROUP 3 - Dynamite and Powder Men	$ 32.84	27.89
LABORER: GROUP 2 :: CALHOUN COUNTY (Hardin) LABORERS CLASSIFICATIONS GROUP 1 - General Laborers. GROUP 2 - Brick Mason and Plasterer Tenders GROUP 3 - Dynamite and Powder Men	$ 33.34	27.89
LABORER: GROUP 3 :: CALHOUN COUNTY (Hardin) LABORERS CLASSIFICATIONS GROUP 1 - General Laborers. GROUP 2 - Brick Mason and Plasterer Tenders GROUP 3 - Dynamite and Powder Men	$ 34.34	27.89

LABO0338-002 08/01/2024

	Rates	Fringes
LABORERS, GROUP 1 GENERAL LABORER (MADISON COUNTY (WOOD RIVER))	$ 34.14	30.59
LABORERS, GROUP 2 ASBESTOS ABATEMENT WORKER AND		

HAZARDOUS WASTE WORKER; LEAD BASE PAINT WORKER
(MADISON COUNTY (WOOD RIVER))....$ 34.64 30.59
LABORERS, GROUP 3 DYNAMITE MAN AND POWDER MAN
(MADISON COUNTY (WOOD RIVER))....$ 35.64 30.59

LABO0397-001 08/01/2022

	Rates	Fringes
LABORERS, GROUP 1 GENERAL LABORER (MADISON COUNTY (SOUTHEAST))	$ 33.43	27.30
LABORERS, GROUP 2 ASBESTOS ABATEMENT WORKER AND HAZARDOUS WASTE WORKER; LEAD BASE PAINT WORKER (MADISON COUNTY (SOUTHEAST))	$ 33.93	27.30
LABORERS, GROUP 3 DYNAMITE MAN (MADISON COUNTY (SOUTHEAST))	$ 34.93	27.30

LABO0397-002 08/01/2022

	Rates	Fringes
LABORERS, GROUP 1 GENERAL LABORER (MADISON COUNTY (GRANITE CITY AND VICINITY))	$ 33.58	27.30
LABORERS, GROUP 2 ASBESTOS ABATEMENT WORKER AND HAZARDOUS WASTE WORKER; LEAD BASE PAINT WORKER (MADISON COUNTY (GRANITE CITY AND VICINITY))	$ 34.08	27.30
LABORERS, GROUP 3 DYNAMITE MAN (MADISON COUNTY (GRANITE CITY AND VICINITY))	$ 35.08	27.30

LABO0397-003 08/01/2022

	Rates	Fringes
LABORER GROUP 1 GENERAL LABORERS. (MADISON COUNTY (EDWARDSVILLE, MARINE, AND LIVINGSTON))	$ 33.58	27.30
LABORER GROUP 3 BRICK MASON AND PLASTERER TENDERS. (MADISON COUNTY (EDWARDSVILLE, MARINE, AND LIVINGSTON))	$ 35.08	27.30
LABORER: GROUP 2 BRICK MASON AND PLASTERER TENDERS. MADISON COUNTY (EDWARDSVILLE, MARINE, AND LIVINGSTON)	$ 34.08	27.30

LABO0459-001 08/01/2024

	Rates	Fringes
LABORERS, GROUP 1 GENERAL LABORER (ST. CLAIR COUNTY (SOUTH))	$ 34.14	30.59
LABORERS, GROUP 2 ASBESTOS ABATEMENT WORKER AND HAZARDOUS WASTE WORKER; LEAD BASE PAINT WORKER (ST. CLAIR COUNTY (SOUTH))	$ 34.64	30.59
LABORERS, GROUP 3 DYNAMITE MAN (ST. CLAIR COUNTY (SOUTH))	$ 35.64	30.59

LABO0459-004 08/01/2024

	Rates	Fringes
HOD CARRIER (ST. CLAIR COUNTY (BELLEVILLE))	$ 34.14	30.59

LABO0581-002 08/01/2024

	Rates	Fringes
LABORERS, GROUP 1 GENERAL LABORER (CLINTON COUNTY (CARLYLE))	$ 31.00	33.73
LABORERS, GROUP 2 ASBESTOS ABATEMENT WORKER AND HAZARDOUS WASTE WORKER; LEAD BASE PAINT WORKER (CLINTON COUNTY (CARLYLE))	$ 31.50	33.73
LABORERS, GROUP 3 DYNAMITE AND POWDER MAN (CLINTON COUNTY (CARLYLE))	$ 32.50	33.73

LABO0622-002 08/01/2024

	Rates	Fringes
LABORERS, GROUP 1 GENERAL LABORER (BOND COUNTY (GREENVILLE))	$ 29.65	35.08
LABORERS, GROUP 2 ASBESTOS ABATEMENT WORKER AND HAZARDOUS WASTE WORKER; LEAD BASE PAINT WORKER (BOND COUNTY (GREENVILLE))	$ 30.15	35.08
LABORERS, GROUP 3 DYNAMITE MAN (BOND COUNTY (GREENVILLE))	$ 31.15	35.08

LABO0622-003 08/01/2024

	Rates	Fringes
LABORERS, GROUP 3 DYNAMITE MAN (BOND COUNTY (EXCEPT THE NORTHSIDE))	$ 31.15	35.08
LABORERS, GROUP 1 GENERAL LABORER (BOND COUNTY (EXCEPT THE NORTHSIDE))	$ 29.65	35.08
LABORERS, GROUP 2 ASBESTOS ABATEMENT WORKER AND HAZARDOUS WASTE WORKER; LEAD BASE PAINT WORKER (BOND COUNTY (EXCEPT THE NORTHSIDE))	$ 30.15	35.08

LABO0742-001 08/01/2022

	Rates	Fringes
LABORERS, GROUP 1 GENERAL LABORER (ST. CLAIR (MASCOUTAH) AND CLINTON (NEW BADEN) COUNTIES)	$ 29.26	31.47
LABORERS, GROUP 2 ASBESTOS ABATEMENT WORKER AND HAZARDOUS WASTE WORKER; LEAD BASE PAINT WORKER (ST. CLAIR (MASCOUTAH) AND CLINTON (NEW BADEN) COUNTIES)	$ 29.76	31.47
LABORERS, GROUP 3 DYNAMITE MAN (ST. CLAIR (MASCOUTAH) AND CLINTON (NEW BADEN) COUNTIES)	$ 30.76	31.47

LABO1084-001 08/01/2024

	Rates	Fringes
LABORERS, GROUP 1 GENERAL LABORER (BOND (SORENTO) AND MONTGOMERY COUNTIES)	$ 32.41	32.32
LABORERS, GROUP 2 ASBESTOS ABATEMENT WORKER AND HAZARDOUS WASTE WORKER; LEAD BASE PAINT WORKER (BOND (SORENTO) AND MONTGOMERY COUNTIES)	$ 32.91	32.32
LABORERS, GROUP 3 DYNAMITE MAN (BOND (SORENTO) AND MONTGOMERY COUNTIES)	$ 33.91	32.32

PAIN0058-002 05/01/2017

	Rates	Fringes
PAINTER: BRIDGE EPOXY OR TOXIC-LEAD-BASED PAINT WORK-$1.00 PREMIMUM	$ 32.45	17.12

PLAS0090-001 08/01/2024

	Rates	Fringes
CEMENT MASON/CONCRETE FINISHER (BOND, CALHOUN, CLINTON (WESTERN HALF EAST TO BUT NOT INCLUDE CARYLE), GREENE, JERSEY, MACOUPIN, MADISON, MONROE, MONTGOMERY, AND ST. CLAIR COUNTIES)	$ 39.00	30.60

PLAS0090-005 08/01/2024

	Rates	Fringes
CEMENT MASON/CONCRETE FINISHER (CLINTON COUNTY)	$ 39.00	30.60

PLAS0143-007 04/01/2016

	Rates	Fringes
CEMENT MASON/CONCRETE FINISHER (WASHINGTON COUNTY)..	$ 36.43	20.87

TEAM0050-006 05/01/2025

	Rates	Fringes
TRUCK DRIVER, GROUP 1 DRIVERS ON 2 AXLES HAULING LESS THAN 9 TONS; AIR COMPRESSOR & WELDING MACHINES AND BROOMS, INCLUDING THOSE PULLED BY SEPARATE UNITS; TRUCK DRIVER HELPER, WAREHOUSE EMPLOYEES; MECHANIC HELPERS; GREASERS AND TIREMEN; PICK-UP TRUCKS WHEN HAULING MATERIAL, TOOLS, OR WORKERS TO AND FROM AND ON THE JOB SITE; AND FORKLIFTS UP TO 6,000 LB CAPACITY. (BOND. CLINTON, MONROE, ST CLAIR, WASHINGTON COUNTIES).....	$ 45.35	25.72
TRUCK DRIVER, GROUP 2 (BOND. CLINTON, MONROE, ST CLAIR, WASHINGTON COUNTIES).....	$ 45.93	25.72
TRUCK DRIVER, GROUP 3 (BOND. CLINTON, MONROE, ST CLAIR, WASHINGTON COUNTIES).....	$ 46.25	25.72
TRUCK DRIVER, GROUP 4 LOW BOY AND OIL DISTRIBUTORS. (BOND. CLINTON, MONROE, ST CLAIR, WASHINGTON COUNTIES).....	$ 46.60	25.72
TRUCK DRIVER, GROUP 5 DRIVERS WHO REQUIRE SPECIAL PROTECTIVE CLOTHING WHILE EMPLOYED ON HAZARDOUS WASTE WORK. (BOND. CLINTON, MONROE, ST CLAIR, WASHINGTON COUNTIES).....	$ 47.71	25.72

TEAM0525-004 05/01/2025

	Rates	Fringes
TRUCK DRIVER, GROUP 1 DRIVERS ON 2 AXLES HAULING LESS THAN 9 TONS; AIR COMPRESSOR & WELDING MACHINES AND BROOMS, INCLUDING THOSE PULLED BY SEPARATE UNITS; TRUCK DRIVER HELPER, WAREHOUSE EMPLOYEES; MECHANIC HELPERS; GREASERS AND TIREMEN; PICK-UP TRUCKS WHEN HAULING MATERIAL, TOOLS, OR WORKERS TO AND FROM AND ON THE JOB SITE; AND FORKLIFTS UP TO 6,000 LB CAPACITY. (CALHOUN, GREENE (SOUTH OF A DIRECT LINE THAT EXTENDS EAST FROM PIKE COUNTY THROUGH HILLVIEW/WHITEHALL TO MACOUPIN COUNTY), JERSEY, MACOUPIN, MADISON, MONTGOMERY COUNTIES).....	$ 45.35	25.72
TRUCK DRIVER, GROUP 2 (CALHOUN, GREENE (SOUTH OF A DIRECT LINE THAT EXTENDS EAST FROM PIKE COUNTY THROUGH HILLVIEW/WHITEHALL TO MACOUPIN COUNTY), JERSEY, MACOUPIN, MADISON, MONTGOMERY COUNTIES).....	$ 45.93	25.72
TRUCK DRIVER, GROUP 3 (CALHOUN, GREENE (SOUTH OF A DIRECT LINE THAT EXTENDS EAST FROM PIKE COUNTY THROUGH HILLVIEW/WHITEHALL TO MACOUPIN COUNTY), JERSEY, MACOUPIN, MADISON, MONTGOMERY COUNTIES).....	$ 46.25	25.72
TRUCK DRIVER, GROUP 4 LOW BOY AND OIL DISTRIBUTORS. (CALHOUN, GREENE (SOUTH OF A DIRECT LINE THAT EXTENDS EAST FROM PIKE COUNTY THROUGH HILLVIEW/WHITEHALL TO MACOUPIN COUNTY), JERSEY, MACOUPIN, MADISON, MONTGOMERY COUNTIES).....	$ 46.60	25.72
TRUCK DRIVER, GROUP 5 DRIVERS WHO REQUIRE SPECIAL PROTECTIVE CLOTHING WHILE EMPLOYED ON HAZARDOUS WASTE WORK. (CALHOUN, GREENE (SOUTH OF A DIRECT LINE THAT EXTENDS EAST FROM PIKE COUNTY THROUGH HILLVIEW/WHITEHALL TO MACOUPIN COUNTY), JERSEY, MACOUPIN, MADISON, MONTGOMERY COUNTIES).....	$ 47.71	25.72

TEAM0916-004 05/01/2025

	Rates	Fringes

TRUCK DRIVER, GROUP 1 DRIVERS ON 2 AXLES HAULING
LESS THAN 9 TONS; AIR COMPRESSOR & WELDING MACHINES
AND BROOMS, INCLUDING THOSE PULLED BY SEPARATE
UNITS; TRUCK DRIVER HELPER, WAREHOUSE EMPLOYEES;
MECHANIC HELPERS; GREASERS AND TIREMEN; PICK-UP
TRUCKS WHEN HAULING MATERIAL, TOOLS, OR WORKERS TO
AND FROM AND ON THE JOB SITE; AND FORKLIFTS UP TO
6,000 LB CAPACITY. (GREENE (NORTH OF A DIRECT LINE
THAT EXTENDS EAST FROM PIKE COUNTY THROUGH
HILLVIEW/WHITEHALL TO MACOUPIN COUNTY) COUNTY).....$ 45.35 25.72
TRUCK DRIVER, GROUP 2 2 OR 3 AXLES HAULING MORE
THAN 9 TONS BUT HAULING LESS THAN 16 TONS; A-FRAME
WINCH TRUCKS; HYDROLIFT TRUCKS; VACTOR TRUCKS OR
SIMILAR EQUIPMENT WHEN USED FOR TRANSPORTATION
PURPOSES; FORKLIFT OVER 6,000 LB.CAPACITY; WINCH
TRUCKS; AND FOUR AXLE COMBIATION UNITS. (GREENE
(NORTH OF A DIRECT LINE THAT EXTENDS EAST FROM PIKE
COUNTY THROUGH HILLVIEW/WHITEHALL TO MACOUPIN
COUNTY) COUNTY).....$ 45.93 25.72
TRUCK DRIVER, GROUP 3 (GREENE (NORTH OF A DIRECT
LINE THAT EXTENDS EAST FROM PIKE COUNTY THROUGH
HILLVIEW/WHITEHALL TO MACOUPIN COUNTY) COUNTY).....$ 46.25 25.72
TRUCK DRIVER, GROUP 4 LOW BOY AND OIL DISTRIBUTORS.
(GREENE (NORTH OF A DIRECT LINE THAT EXTENDS EAST
FROM PIKE COUNTY THROUGH HILLVIEW/WHITEHALL TO
MACOUPIN COUNTY) COUNTY).....$ 46.60 25.72
TRUCK DRIVER, GROUP 5 DRIVERS WHO REQUIRE SPECIAL
PROTECTIVE CLOTHING WHILE EMPLOYED ON HAZARDOUS
WASTE WORK. (GREENE (NORTH OF A DIRECT LINE THAT
EXTENDS EAST FROM PIKE COUNTY THROUGH
HILLVIEW/WHITEHALL TO MACOUPIN COUNTY) COUNTY).....$ 47.71 25.72

WELDERS - Receive rate prescribed for craft performing
operation to which welding is incidental.

==========

Note: Executive Order (EO) 13706, Establishing Paid Sick Leave
for Federal Contractors applies to all contracts subject to the
Davis-Bacon Act for which the contract is awarded (and any
solicitation was issued) on or after January 1, 2017. If this
contract is covered by the EO, the contractor must provide
employees with 1 hour of paid sick leave for every 30 hours
they work, up to 56 hours of paid sick leave each year.
Employees must be permitted to use paid sick leave for their
own illness, injury or other health-related needs, including
preventive care; to assist a family member (or person who is
like family to the employee) who is ill, injured, or has other
health-related needs, including preventive care; or for reasons
resulting from, or to assist a family member (or person who is
like family to the employee) who is a victim of, domestic
violence, sexual assault, or stalking. Additional information
on contractor requirements and worker protections under the EO
is available at https://www.dol.gov/agencies/whd/government-contracts.

Note: Executive Order 13658 generally applies to contracts subject to
the Davis-Bacon Act that were awarded on or between January 1,
2015 and January 29, 2022, and that have not been renewed or
extended on or after January 30, 2022. Executive Order 13658 does
not apply to contracts subject only to the Davis-Bacon Related Acts
regardless of when they were awarded. If a contract is subject to
Executive Order 13658, the contractor must pay all covered workers at
least $13.65 per hour (or the applicable wage rate listed on this wage
determination, if it is higher) for all hours spent performing on the

contract from May 11, 2026, through December 31, 2026. The applicable Executive Order minimum wage rate will be adjusted annually. Additional information on contractor requirements and worker protections under Executive Order 13658 is available at www.dol.gov/whd/govcontracts.

Unlisted classifications needed for work not included within the scope of the classifications listed may be added after award only as provided in the labor standards contract clauses (29CFR 5.5 (a) (1) (iii)).

The body of each wage determination lists the classifications and wage rates that have been found to be prevailing for the type(s) of construction and geographic area covered by the wage determination. The classifications are listed in alphabetical order under rate identifiers indicating whether the particular rate is a union rate (current union negotiated rate), a survey rate, a weighted union average rate, a state adopted rate, or a supplemental classification rate.

Union Rate Identifiers

A four-letter identifier beginning with characters other than SU, UAVG, SA, or SC denotes that a union rate was prevailing for that classification in the survey. Example: PLUM0198-005 07/01/2024. PLUM is an identifier of the union whose collectively bargained rate prevailed in the survey for this classification, which in this example would be Plumbers. 0198 indicates the local union number or district council number where applicable, i.e., Plumbers Local 0198. The next number, 005 in the example, is an internal number used in processing the wage determination. The date, 07/01/2024 in the example, is the effective date of the most current negotiated rate.

Union prevailing wage rates are updated to reflect all changes over time that are reported to WHD in the rates in the collective bargaining agreement (CBA) governing the classification.

Union Average Rate Identifiers

The UAVG identifier indicates that no single rate prevailed for those classifications, but that 100% of the data reported for the classifications reflected union rates. EXAMPLE: UAVG-OH-0010 01/01/2024. UAVG indicates that the rate is a weighted union average rate. OH indicates the State of Ohio. The next number, 0010 in the example, is an internal number used in producing the wage determination. The date, 01/01/2024 in the example, indicates the date the wage determination was updated to reflect the most current union average rate.

A UAVG rate will be updated once a year, usually in January, to reflect a weighted average of the current rates in the collective bargaining agreements on which the rate is based.

Survey Rate Identifiers

The SU identifier indicates that either a single non-union rate prevailed (as defined in 29 CFR 1.2) for this classification in the survey or that the rate was derived by computing a weighted average rate based on all the rates

reported in the survey for that classification. As a weighted average rate includes all rates reported in the survey, it may include both union and non-union rates. Example: SUFL2022-007 6/27/2024. SU indicates the rate is a single non-union prevailing rate or a weighted average of survey data for that classification. FL indicates the State of Florida. 2022 is the year of the survey on which these classifications and rates are based. The next number, 007 in the example, is an internal number used in producing the wage determination. The date, 6/27/2024 in the example, indicates the survey completion date for the classifications and rates under that identifier.

SU wage rates typically remain in effect until a new survey is conducted. However, the Wage and Hour Division (WHD) has the discretion to update such rates under 29 CFR 1.6(c)(1).

State Adopted Rate Identifiers

The SA identifier indicates that the classifications and prevailing wage rates set by a state (or local) government were adopted under 29 C.F.R 1.3(g)-(h). Example: SAME2023-007 01/03/2024. SA reflects that the rates are state adopted. ME refers to the State of Maine. 2023 is the year during which the state completed the survey on which the listed classifications and rates are based. The next number, 007 in the example, is an internal number used in producing the wage determination. The date, 01/03/2024 in the example, reflects the date on which the classifications and rates under the SA identifier took effect under state law in the state from which the rates were adopted.

WAGE DETERMINATION APPEALS PROCESS

1) Has there been an initial decision in the matter? This can be:

a) a survey underlying a wage determination
b) an existing published wage determination
c) an initial WHD letter setting forth a position on a wage determination matter
d) an initial conformance (additional classification and rate) determination

On survey related matters, initial contact, including requests for summaries of surveys, should be directed to the WHD Branch of Wage Surveys. Requests can be submitted via email to davisbaconinfo@dol.gov or by mail to:

Branch of Wage Surveys
Wage and Hour Division
U.S. Department of Labor
200 Constitution Avenue, N.W.
Washington, DC 20210

Regarding any other wage determination matter such as conformance decisions, requests for initial decisions should be directed to the WHD Branch of Construction Wage Determinations. Requests can be submitted via email to BCWD-Office@dol.gov or by mail to:

Branch of Construction Wage Determinations
Wage and Hour Division
U.S. Department of Labor

200 Constitution Avenue, N.W.
Washington, DC 20210

2) If an initial decision has been issued, then any interested party (those affected by the action) that disagrees with the decision can request review and reconsideration from the Wage and Hour Administrator (See 29 CFR Part 1.8 and 29 CFR Part 7). Requests for review and reconsideration can be submitted via email to dba.reconsideration@dol.gov or by mail to:

Wage and Hour Administrator
U.S. Department of Labor
200 Constitution Avenue, N.W.
Washington, DC 20210

The request should be accompanied by a full statement of the interested party's position and any information (wage payment data, project description, area practice material, etc.) that the requestor considers relevant to the issue.

3) If the decision of the Administrator is not favorable, an interested party may appeal directly to the Administrative Review Board (formerly the Wage Appeals Board). Write to:

Administrative Review Board
U.S. Department of Labor
200 Constitution Avenue, N.W.
Washington, DC 20210.

==========

END OF GENERAL DECISION"

Intentionally Blank

Contractor's Application for Payment

Owner:		**Owner's Project No.:**	
Engineer:		**Engineer's Project No.:**	
Contractor:		**Contractor's Project No.:**	
Project:			
Contract:			
Application No.:		**Application Date:**	
Application Period:	**From**	**to**	

1. Original Contract Price				$ -
2. Net change by Change Orders				$ -
3. Current Contract Price (Line 1 + Line 2)				$ -
4. Total Work completed and materials stored to date (Sum of Column G Lump Sum Total and Column J Unit Price Total)				$ -
5. Retainage				
a.	X	$ -	Work Completed	$ -
b.	X	$ -	Stored Materials	$ -
c. Total Retainage (Line 5.a + Line 5.b)				$ -
6. Amount eligible to date (Line 4 - Line 5.c)				$ -
7. Less previous payments (Line 6 from prior application)				
8. Amount due this application				$ -
9. Balance to finish, including retainage (Line 3 - Line 4)				$ -

Contractor's Certification

The undersigned Contractor certifies, to the best of its knowledge, the following:

(1) All previous progress payments received from Owner on account of Work done under the Contract have been applied on account to discharge Contractor's legitimate obligations incurred in connection with the Work covered by prior Applications for Payment;

(2) Title to all Work, materials and equipment incorporated in said Work, or otherwise listed in or covered by this Application for Payment, will pass to Owner at time of payment free and clear of all liens, security interests, and encumbrances (except such as are covered by a bond acceptable to Owner indemnifying Owner against any such liens, security interest, or encumbrances); and

(3) All the Work covered by this Application for Payment is in accordance with the Contract Documents and is not defective.

Contractor: _____

Signature: _____ **Date:** _____

Recommended by Engineer		**Approved by Owner**	
By:		**By:**	
Title:		**Title:**	
Date:		**Date:**	
Approved by Funding Agency			
By:		**By:**	
Title:		**Title:**	
Date:		**Date:**	

(c) 2018 National Society of Professional Engineers for EJCDC. All rights reserved.

Progress Estimate - Unit Price Work

Contractor's Application for Payment

Owner: _____ Owner's Project No.: _____
Engineer: _____ Engineer's Project No.: _____
Contractor: _____ Contractor's Project No.: _____
Project: _____
Contract: _____

Application No.: _____ Application Period: From _____ to _____ Application Date: _____

A	B	C	D	E	F	G	H	I	J	K	L
		Contract Information				Work Completed					
Bid Item No.	Description	Item Quantity	Units	Unit Price ($)	Value of Bid Item (C X E) ($)	Estimated Quantity Incorporated in the Work	Value of Work Completed to Date (E X G) ($)	Materials Currently Stored (not in G) ($)	Work Completed and Materials Stored to Date (H + I) ($)	% of Value of Item (J / F) (%)	Balance to Finish (F - J) ($)
Original Contract											
					-		-		-		-
					-		-		-		-
					-		-		-		-
					-		-		-		-
					-		-		-		-
					-		-		-		-
					-		-		-		-
					-		-		-		-
					-		-		-		-
					-		-		-		-
					-		-		-		-
					-		-		-		-
					-		-		-		-
					-		-		-		-
					-		-		-		-
					-		-		-		-
					-		-		-		-
					-		-		-		-
					-		-		-		-
					-		-		-		-
				Original Contract Totals	$ -		$ -	$ -	$ -		$ -

EJCDC C-620 Contractor's Application for Payment
(c) 2018 National Society of Professional Engineers for EJCDC. All rights reserved.

Progress Estimate - Unit Price Work

Contractor's Application for Payment

Owner: _____ Owner's Project No.: _____
Engineer: _____ Engineer's Project No.: _____
Contractor: _____ Contractor's Project No.: _____
Project: _____
Contract: _____

Application No.: _____ Application Period: From _____ to _____ Application Date: _____

A	B	C	D	E	F	G	H	I	J	K	L
		Contract Information				Work Completed					
Bid Item No.	Description	Item Quantity	Units	Unit Price ($)	Value of Bid Item (C X E) ($)	Estimated Quantity Incorporated in the Work	Value of Work Completed to Date (E X G) ($)	Materials Currently Stored (not in G) ($)	Work Completed and Materials Stored to Date (H + I) ($)	% of Value of Item (J / F) (%)	Balance to Finish (F - J) ($)
Change Orders											
					-		-		-		-
					-		-		-		-
					-		-		-		-
					-		-		-		-
					-		-		-		-
					-		-		-		-
					-		-		-		-
					-		-		-		-
					-		-		-		-
					-		-		-		-
					-		-		-		-
					-		-		-		-
					-		-		-		-
					-		-		-		-
					-		-		-		-
					-		-		-		-
					-		-		-		-
					-		-		-		-
					-		-		-		-
					-		-		-		-
				Change Order Totals	$ -		$ -	$ -	$ -		$ -
Original Contract and Change Orders											
				Project Totals	$ -		$ -	$ -	$ -		$ -

EJCDC C-620 Contractor's Application for Payment
(c) 2018 National Society of Professional Engineers for EJCDC. All rights reserved.

Stored Materials Summary

Contractor's Application for Payment

Owner:
Engineer:
Contractor:
Project:
Contract:

Owner's Project No.:
Engineer's Project No.:
Contractor's Project No.:

Application No.: Application Period: From to Application Date:

A	B	C	D	E	F	G	H	I	J	K	L	M
						Materials Stored			Incorporated in Work			
Item No. (Lump Sum Tab) or Bid Item No. (Unit Price Tab)	Supplier Invoice No.	Submittal No. (with Specification Section No.)	Description of Materials or Equipment Stored	Storage Location	Application No. When Materials Placed in Storage	Previous Amount Stored ($)	Amount Stored this Period ($)	Amount Stored to Date (G+H) ($)	Amount Previously Incorporated in the Work ($)	Amount Incorporated in the Work this Period ($)	Total Amount Incorporated in the Work (J+K) ($)	Materials Remaining in Storage (I-L) ($)
								-			-	-
								-			-	-
								-			-	-
								-			-	-
								-			-	-
								-			-	-
								-			-	-
								-			-	-
								-			-	-
								-			-	-
								-			-	-
								-			-	-
								-			-	-
								-			-	-
								-			-	-
								-			-	-
								-			-	-
								-			-	-
								-			-	-
								-			-	-
					Totals	$ -	$ -	$ -	$ -	$ -	$ -	$ -

EJCDC C-620 Contractor's Application for Payment
(c) 2018 National Society of Professional Engineers for EJCDC. All rights reserved.

U.S. Department of Labor
Wage and Hour Division

Davis-Bacon and Related Acts Weekly Certified Payroll Form

(For Contractor's Optional Use; See Instructions at www.dol.gov/whd/forms/wh347instr.htm)

Unless otherwise noted, the information requested is specific to the named project below.

Persons are not required to respond to the collection of information unless it displays a currently valid OMB control number.

U.S. Wage and Hour Division

Rev. January 2025
OMB No.: 1235-0008
Expires: 01/31/2028

☐ SUBMISSION OF FINAL DBRA CERTIFIED PAYROLL FORM ☐ PRIME CONTRACTOR ☐ SUBCONTRACTOR

PROJECT NAME	PROJECT NO. or CONTRACT NO.	CERTIFIED PAYROLL NO.	PRIME CONTRACTOR'S/SUBCONTRACTOR'S BUSINESS NAME
PROJECT LOCATION	**WAGE DETERMINATION NO.**	**WEEK ENDING DATE**	**PRIME CONTRACTOR'S/SUBCONTRACTOR'S BUSINESS ADDRESS**

(1A)	(1B)	(1C)	(1D)	(1E)	(2)	(3)		(4)							(5)		(6A)	(6B)	(6C)	(7A)	(7B)	(8)				(9)
WORKER ENTRY NO.	WORKER LAST NAME	WORKER FIRST NAME	WORKER MIDDLE INITIAL	WORKER IDENTIFYING NO.	(J) JOURNEYWORKER (RA) REGISTERD APPRENTICE	LABOR CLASSIFICATION		ST = STRAIGHT TIME OT = OVERTIME	(TOP) DAYS OF WORK WEEK (BOTTOM) DATES						TOTAL HOURS WORKED FOR WEEK		HOURLY WAGE RATE PAID FOR ST AND OT	TOTAL FRINGE BENEFIT CREDIT	PAYMENT IN LIEU OF FRINGE BENEFITS	GROSS AMT EARNED	GROSS AMT EARNED FOR **ALL WORK**	DEDUCTIONS FOR **ALL WORK**				NET PAY TO WORKER FOR **ALL WORK**
									HOURS WORKED EACH DAY													TAX WITH-HOLDINGS	FICA	OTHER (MUST SPECIFY, SEE INSTRUCTIONS)	TOTAL DEDUCTIONS	
								ST																		
								OT																		
								ST																		
								OT																		
								ST																		
								OT																		
								ST																		
								OT																		
								ST																		
								OT																		
								ST																		
								OT																		
								ST																		
								OT																		

While use of Form WH-347 itself is optional, covered contractors and subcontractors performing work on Federal or federally assisted construction contracts are required by the DBRA regulations and the contract clauses to submit payroll information on a weekly basis. The Copeland Act (40 U.S.C. § 3145) requires contractors and subcontractors performing work on Federal or federally financed construction contracts to, on a weekly basis, "furnish a statement on the wages paid each employee during the prior week." U.S. Department of Labor (DOL) Regulations at 29 C.F.R. § 5.5(a)(3)(ii) require contractors and subcontractors to submit weekly certified payrolls to the appropriate Federal agency if the agency is a party to the contract (or, if the agency is not such a party, to the applicant, sponsor, owner, or other entity, as the case may be, that maintains such records, for transmission to the Federal agency). Each certified payroll must be accompanied by a signed "Statement of Compliance" (e.g., page 2 of the WH-347 or another document with identical wording) indicating that the certified payrolls are accurate and complete, and that each laborer or mechanic has been paid not less than the required Davis-Bacon prevailing wage rate(s) (including any fringe benefits) for the work performed. DOL and contracting agencies receiving this information review the information to determine whether workers have received legally required wages and fringe benefits.

Public Burden Statement

We estimate that it will take an average of 55 minutes to complete this collection, including time for reviewing instructions, searching existing data sources, gathering and maintaining the data needed, and completing and reviewing the collection of information. If you have any comments regarding these estimates or any other aspect of this collection, including suggestions for reducing this burden, send them to the Administrator, Wage and Hour Division, U.S. Department of Labor, Room S3502, 200 Constitution Avenue, N.W. Washington, D.C. 20210

(over)

PROJECT NAME	PROJECT NO. or CONTRACT NO.	PAYROLL NO.	PRIME CONTRACTOR'S/SUBCONTRACTOR'S BUSINESS NAME

PROJECT LOCATION	WEEK ENDING DATE	CERTIFYING OFFICIAL's NAME AND TITLE

I paid or supervised the payment of the laborers or mechanics working on the above project during the stated time period. I certify the following:

☐ The payroll information submitted with this statement is correct and complete for the above project during the above period, and the wage and fringe benefit rates paid to the workers, including credit taken for the reasonably anticipated costs of a bona fide fringe benefit plan, fund or program, are not less than the applicable wage and fringe benefits rates for the classification(s) of work actually performed, as specified in the wage determination(s) incorporated into the contract.

☐ All regular payrolls and all other basic records that the contractor is required to maintain for this payroll period are complete and accurate and will be made available upon request from the agency or the Department of Labor.

☐ The classifications reported for each laborer or mechanic are the classification(s) of work that each worker actually performed.

☐ Any workers paid as apprentices during the above period are duly registered in a bona fide apprenticeship program registered with the Office of Apprenticeship, Employment and Training Administration, United States Department of Labor ("OA"), or a State Apprenticeship Agency ("SAA") recognized by Department of Labor. I have verified the registered apprenticeship program information provided below as accurate and applicable to any apprentices identified on page 1 of this form.

APPRENTICESHIP PROGRAM NAME	REGISTERED		NAME OF LABOR CLASSIFICATION
	☐ OA	☐ SAA	
	☐ OA	☐ SAA	
	☐ OA	☐ SAA	

☐ Fringe benefits have been paid in cash and/or to bona fide fringe benefit plans, funds, or programs. Where the contractor is claiming an hourly credit for their contributions to or reasonably anticipated costs of a bona fide fringe benefit plan, fund, or program, provide plan information and the hourly credit claimed for each worker listed on the previous page of this form.

HOURLY CREDIT FOR FRINGE BENEFITS

If an amount is listed in (6B) on the first page of this certified payroll form, enter the hourly credit claimed under each plan name, type and number for each worker and check whether the plan is funded or unfunded.

NAME OF WORKER	FB NAME		FB NAME		FB NAME		FB NAME		FB NAME		FB NAME		TOTAL HOURLY CREDIT
	FB TYPE		FB TYPE		FB TYPE		FB TYPE		FB TYPE		FB TYPE		
	PLAN NO.		PLAN NO.		PLAN NO.		PLAN NO.		PLAN NO.		PLAN NO.		
	☐ Funded	☐ Unfunded	☐ Funded	☐ Unfunded	☐ Funded	☐ Unfunded	☐ Funded	☐ Unfunded	☐ Funded	☐ Unfunded	☐ Funded	☐ Unfunded	
	Hourly Credit	$	Hourly Credit	$	Hourly Credit	$	Hourly Credit	$	Hourly Credit	$	Hourly Credit	$	$
	Hourly Credit	$	Hourly Credit	$	Hourly Credit	$	Hourly Credit	$	Hourly Credit	$	Hourly Credit	$	$
	Hourly Credit	$	Hourly Credit	$	Hourly Credit	$	Hourly Credit	$	Hourly Credit	$	Hourly Credit	$	$
	Hourly Credit	$	Hourly Credit	$	Hourly Credit	$	Hourly Credit	$	Hourly Credit	$	Hourly Credit	$	$
	Hourly Credit	$	Hourly Credit	$	Hourly Credit	$	Hourly Credit	$	Hourly Credit	$	Hourly Credit	$	$
	Hourly Credit	$	Hourly Credit	$	Hourly Credit	$	Hourly Credit	$	Hourly Credit	$	Hourly Credit	$	$
	Hourly Credit	$	Hourly Credit	$	Hourly Credit	$	Hourly Credit	$	Hourly Credit	$	Hourly Credit	$	$
	Hourly Credit	$	Hourly Credit	$	Hourly Credit	$	Hourly Credit	$	Hourly Credit	$	Hrly Credit	$	$

☐ All workers on the project have been paid the full weekly wages earned, and no rebates or deductions have been or will be made either directly or indirectly, other than permissible deductions as defined in 29 CFR part 3.

ADDITIONAL REMARKS

SIGNATURE OF CERTIFYING OFFICIAL	DATE	TELEPHONE NUMBER	EMAIL ADDRESS
		(___) ___-____	

THE WILLFUL FALSIFICATION OF ANY OF THE ABOVE STATEMENTS MAY SUBJECT THE CONTRACTOR OR SUBCONTRACTOR TO CIVIL OR CRIMINAL PROSECUTION (SEE SECTION 1001 OF TITLE 18 AND SECTION 3729 OF TITLE 31 OF THE UNITED STATES CODE), AS WELL AS DEBARMENT FROM FUTURE FEDERAL AND FEDERALLY-ASSISTED CONTRACTS. INFORMATION REPORTED IN CERTIFIED PAYROLLS MAY BE SUBJECT TO DISCLOSURE IN RESPONSE TO A FREEDOM OF INFORMATION ACT REQUEST.

PARTIAL WAIVER OF LIEN

To All Whom It May Concern:

WHEREAS, the undersigned has been employed by (A)_____

_____to

furnish labor and materials for (B) _____

_____..under

a contract (C) _____ for the

improvement of the premises described as (D) _____

_____ in the

_____ (City-Village) of _____, County of _____, State of _____ of which

_____ is the Owner.

NOW, THEREFORE, this _____ day of _____, 20____, for and in consideration of the sum of (E) _____Dollars ($_____)

paid simultaneously herewith, the receipt whereof is hereby acknowledged by the undersigned, the undersigned does hereby waive and release to the extent only of the aforesaid amount, any lien rights to, or claim of lien with respect to and on said above-described premises, and the improvements thereon, and on the monies or other considerations due or to become due from the owner, by virtue of said contract, on account of labor, services, materials, fixtures, apparatus or machinery furnished by the undersigned to or for the above-described premises, but only to the extent of the payment aforesaid.

(F)_____

(SEAL)

(name of sole ownership, corporation or partnership)

(Affix corporate
Seal here)

_____

(SEAL)

(Signature)

TITLE:_____

INSTRUCTIONS FOR PARTIAL WAIVER

(A) Name person or firm with whom you agreed to furnish either labor, or services, or materials, or both.
(B) Fill in nature and extent of work: strike the word labor or the word materials if not in your contract.
(C) If you have more than one contract on the same premises, describe the contract by number, if available, date and extent of work.
(D) Furnish an accurate enough description of the improvement and location of the premises so that it can be distinguished from any other property.
(E) Amount shown should be the amount actually received on that date.
(F) If waiver is for a corporation, corporate name should be used, corporate seal affixed and title of officer signing waiver should be set forth; if waiver is for a partnership, the partnership name should be used, partner should sign and designate himself as partner.

Construction Industry Affairs Committee of Chicago.

Intentionally Blank

FINAL WAIVER OF LIEN

To All Whom It May Concern:

WHEREAS, the undersigned has been employed by (A)_____
_____to
furnish labor and materials for (B) _____
_____..under
a contract (C) _____ for the
improvement of the premises described as (D) _____
_____ in the
_____ (City-Village) of _____, County of _____, State of _____ of which
_____ is the Owner.

NOW, THEREFORE, this _____ day of _____, 20____, for and in consideration of the sum of

(E) _____Dollars ($_____)

paid simultaneously herewith, the receipt whereof is hereby acknowledged by the undersigned, the undersigned does hereby waive and release any lien rights to, or claim of lien with respect to and on said above-described premises, and the improvements thereon, and on the monies or other considerations due or to become due from the owner, on account of labor, services, materials, fixtures, apparatus or machinery heretofore or which may hereafter be furnished by the undersigned to or for the above-described premises, by virtue of said contract.

(F)_____ (SEAL)
(name of sole ownership, corporation or partnership)

(Affix corporate
Seal here)

_____ (SEAL)
(Signature)

TITLE:_____

INSTRUCTIONS FOR FINAL WAIVER

(A) Person or firm with whom you agreed to furnish either labor, or services, or materials, or both.
(B) Fill in nature and extent of work: strike the word labor or the word materials if not in your contract.
(C) If you have more than one contract on the same premises, describe the contract by number, if available, date and extent of work.
(D) Furnish an accurate enough description of the improvement and location of the premises so that it can be distinguished from any other property.
(E) Amount shown should be the amount actually received and equal to total amount of contract as adjusted.
(F) If waiver is for a corporation, corporate name should be used, corporate seal affixed and title of officer signing waiver should be set forth; if waiver is for a partnership, the partnership name should be used, partner should sign and designate himself as partner.

Approved By The
Construction Industry Affairs Committee (CIAC).

Intentionally Blank

CERTIFICATE OF SUBSTANTIAL COMPLETION

Owner:	Illinois Alluvial Regional Water Company, Inc.	Owner's Project No.:	
Engineer:	MECO-Heneghan Engineers, LLC	Engineer's Project No.:	71000-412
Contractor:		Contractor's Project No.:	
Project:	Phase 1b		
Contract Name:	Contract F		

This ☐ Preliminary ☐ Final Certificate of Substantial Completion applies to:

☐ All Work ☐ The following specified portions of the Work:

[Describe the portion of the work for which Certificate of Substantial Completion is issued]

Date of Substantial Completion: **[Enter date, as determined by Engineer]**

The Work to which this Certificate applies has been inspected by authorized representatives of Owner, Contractor, and Engineer, and found to be substantially complete. The Date of Substantial Completion of the Work or portion thereof designated above is hereby established, subject to the provisions of the Contract pertaining to Substantial Completion. The date of Substantial Completion in the final Certificate of Substantial Completion marks the commencement of the contractual correction period and applicable warranties required by the Contract.

A punch list of items to be completed or corrected is attached to this Certificate. This list may not be all-inclusive, and the failure to include any items on such list does not alter the responsibility of the Contractor to complete all Work in accordance with the Contract Documents.

Amendments of contractual responsibilities recorded in this Certificate should be the product of mutual agreement of Owner and Contractor; see Paragraph 15.03.D of the General Conditions.

The responsibilities between Owner and Contractor for security, operation, safety, maintenance, heat, utilities, insurance, and warranties upon Owner's use or occupancy of the Work must be as provided in the Contract, except as amended as follows:

Amendments to Owner's Responsibilities: ☐ None ☐ As follows:

[List amendments to Owner's Responsibilities]

Amendments to Contractor's Responsibilities: ☐ None ☐ As follows:

[List amendments to Contractor's Responsibilities]

The following documents are attached to and made a part of this Certificate:

[List attachments such as punch list; other documents]

This Certificate does not constitute an acceptance of Work not in accordance with the Contract Documents, nor is it a release of Contractor's obligation to complete the Work in accordance with the Contract Documents.

Engineer

By *(signature)*: _____

Name *(printed)*: _____

Title: _____

Copyright© 2018 National Society of Professional Engineers, American Council of Engineering Companies, and American Society of Civil Engineers. All rights reserved.

Intentionally Blank

WORK CHANGE DIRECTIVE NO.: [Number of Work Change Directive]

Owner:	Illinois Alluvial Regional Water Company, Inc.	Owner's Project No.:	
Engineer:	MECO-Heneghan Engineers, LLC	Engineer's Project No.:	71000-412
Contractor:		Contractor's Project No.:	
Project:	Phase 1b		
Contract Name:	Contract F		
Date Issued:		Effective Date of Work Change Directive:	

Contractor is directed to proceed promptly with the following change(s):

Description:

[Description of the change to the Work]

Attachments:

[List documents related to the change to the Work]

Purpose for the Work Change Directive:

[Describe the purpose for the change to the Work]

Directive to proceed promptly with the Work described herein, prior to agreeing to change in Contract Price and Contract Time, is issued due to:

Notes to User—Check one or both of the following

☐ Non-agreement on pricing of proposed change. ☐ Necessity to proceed for schedule or other reasons.

Estimated Change in Contract Price and Contract Times (non-binding, preliminary):

Contract Price: $ _____ **[increase] [decrease] [not yet estimated]**.

Contract Time: _____ days **[increase] [decrease] [not yet estimated]**.

Basis of estimated change in Contract Price:

☐ Lump Sum ☐ Unit Price ☐ Cost of the Work ☐ Other

	Recommended by Engineer	Authorized by Owner
By:	_____	_____
Title:	_____	_____
Date:	_____	_____

Copyright© 2018 National Society of Professional Engineers, American Council of Engineering Companies, and American Society of Civil Engineers. All rights reserved.

Intentionally Blank

CHANGE ORDER NO.: [Number of Change Order]

Owner:	Illinois Alluvial Regional Water Company, Inc.	Owner's Project No.:	
Engineer:	MECO-Heneghan Engineers, LLC	Engineer's Project No.:	71000-412
Contractor:		Contractor's Project No.:	
Project:	Phase 1b		
Contract Name:	Contract F		
Date Issued:		Effective Date of Change Order:	

The Contract is modified as follows upon execution of this Change Order:

Description:

[Description of the change]

Attachments:

[List documents related to the change]

Change in Contract Price	**Change in Contract Times [State Contract Times as either a specific date or a number of days]**
Original Contract Price: $ _____	Original Contract Times: Substantial Completion: _____ Ready for final payment: _____
[Increase] [Decrease] from previously approved Change Orders No. 1 to No. **[Number of previous Change Order]**: $ _____	**[Increase] [Decrease]** from previously approved Change Orders No.1 to No. **[Number of previous Change Order]**: Substantial Completion: _____ Ready for final payment: _____
Contract Price prior to this Change Order: $ _____	Contract Times prior to this Change Order: Substantial Completion: _____ Ready for final payment: _____
[Increase] [Decrease] this Change Order: $ _____	**[Increase] [Decrease]** this Change Order: Substantial Completion: _____ Ready for final payment: _____
Contract Price incorporating this Change Order: $ _____	Contract Times with all approved Change Orders: Substantial Completion: _____ Ready for final payment: _____

	Recommended by Engineer (if required)	Authorized by Owner
By:	_____	_____
Title:	_____	_____
Date:	_____	_____

	Authorized by Contractor	Approved by Funding Agency (if applicable)
By:	_____	_____
Title:	_____	_____
Date:	_____	_____

Copyright© 2018 National Society of Professional Engineers, American Council of Engineering Companies and American Society of Civil Engineers. All rights reserved.

Intentionally Blank

FIELD ORDER NO.: [Number of Field Order]

Owner:	Illinois Alluvial Regional Water Company, Inc.	Owner's Project No.:	
Engineer:	MECO-Heneghan Engineers, LLC	Engineer's Project No.:	71000-412
Contractor:		Contractor's Project No.:	
Project:	Phase 1b		
Contract Name:	Contract F		
Date Issued:		Effective Date of Field Order:	

Contractor is hereby directed to promptly perform the Work described in this Field Order, issued in accordance with Paragraph 11.04 of the General Conditions, for minor changes in the Work without changes in Contract Price or Contract Times. If Contractor considers that a change in Contract Price or Contract Times is required, submit a Change Proposal before proceeding with this Work.

Reference:

Specification Section(s):

Drawing(s) / Details (s):

Description:

[Description of the change to the Work]

Attachments:

[List documents supporting change]

Issued by Engineer

By: _____

Title: _____

Date: _____

Copyright© 2018 National Society of Professional Engineers, American Council of Engineering Companies and American Society of Civil Engineers. All rights reserved.

Intentionally Blank

WATER AND SEWER LINE
CONSTRUCTION STANDARDS AND POLICIES

Established by the

ILLINOIS DEPARTMENT OF AGRICULTURE

The following standards and policies will serve to minimize the negative agricultural impacts that may result due to water and sewer line construction.

The standards and policies only apply to construction activities occurring partially or wholly on privately owned agricultural land. They do not apply to construction activities occurring on highway or railroad right-of-way, or on publicly owned land. The only exceptions are the construction standards relating to the repair of drainage tile (Item No. 3). The tile line construction standards shall be implemented regardless of where drainage tile is encountered.

Conditions

The mitigative actions specified in the construction standards and policies will be implemented in accordance with the conditions listed below:

A. All mitigative actions are subject to change by landowners, provided such changes are acceptable to the Project Sponsor.

B. The Project Sponsor may negotiate with landowners to carry out the mitigative actions that landowners wish to perform themselves. The landowners will receive the area commercial rate for their labor and machinery costs.

C. All mitigative actions, unless otherwise specified, will be implemented within 45 days of completion of water or sewer line facilities on any affected property, weather and landowner permitting. Temporary repairs will be made by the Project Sponsor during the construction process as needed to minimize the risk of additional property damage that may result from an extended construction time period.

D. All mitigative actions will extend to associated future construction, maintenance, and repairs.

E. The Project Sponsor will provide a copy of the Water and Sewer Line Construction Standards and Policies to all owners of agricultural land that will be impacted by water and/or sewer line construction, and will do at the time of easement contract negotiations.

Definitions

Project Sponsor - Entity proposing the construction of water or sewer lines and their related appurtenances.

Agricultural land - Land used for cropland, pastureland, managed woodlands, truck gardens, orchards, nurseries, and other related agricultural enterprises dependent upon soil integrity.

Cropland - Land used for growing row crops, small grains, or hay; includes land which was formerly used as cropland, but is currently in a government set-aside or conservation reserve program.

Water or Sewer Line	-	Includes water transmission and distribution lines, sewer trunk lines, sewer gravity flow lines, interceptors, or force mains and any related appurtenances.
Landowner	-	Person(s) responsible for making decisions regarding the restoration of the land adversely impacted by a water or sewer line.
Prime Farmland	-	Agricultural land comprised of soils that are defined by the USDA Natural Resources Conservation Service as being "Prime" soils (generally considered the most productive soils with the least input of nutrients and management).
Right-of-Way	-	Includes the permanent and temporary easements that the Project Sponsor acquires for the purpose of constructing water or sewer lines across privately owned land.

WATER AND SEWER LINE CONSTRUCTION STANDARDS AND POLICIES

1. Water and Sewer Line Depth

A. All water and sewer lines which are placed in trenches 24 inches in width or less will be buried with a minimum of 42 inches **(60 inches are suggested by the Illinois Department of Agriculture)** of top cover where they cross cropland.

B. All water and sewer lines that are placed in trenches greater than 24 inches in width will be buried with 60 inches of topcover where they cross cropland.

C. In terrain where bedrock prevents the placement of any water or sewer lines at the depths specified in 1.A. or 1.B. above, the water or sewer lines will be buried as deep as is practicable and feasible.

2. Topsoil Replacement

The following standards apply only when water and sewer lines are buried in trenches that are greater than 24 inches wide.

A. The actual depth of the topsoil, will first be stripped from the area to be excavated for a water or sewer line trench, all bore pits, and other areas of excavation.

B. All subsoil material that is removed from the trench will be placed in a second stockpile that is separate from the topsoil stockpile.

C. In backfilling the trench and other excavated areas, the stockpiled subsoil material will be placed back into the trench first. The topsoil will be replaced last so that it remains the top layer of soil.

D. The topsoil and subsoil must be replaced within the trench and other excavated area so that after settling occurs, the land's original contour (with an allowance for settling) will be achieved.

E. The subsoil displaced by the water or sewer line must be hauled off the landowner's premises or disposed of on the landowner's premises at a location that is acceptable to the landowner.

3. Repair Of Damaged Tile Lines

If underground drainage tile is damaged by water or sewer line construction, it must be repaired in a manner that assures the tile line's proper operation at the point of repair. The following standards and policies shall apply to the tile line repairs.

A. The Project Sponsor will endeavor to locate all tile lines prior to water or sewer line construction so repairs can be made if necessary. The Project Sponsor will contact affected landowners/tenants for their knowledge of tile line locations prior to any water or sewer line construction. All identified tile lines will be flagged to alert construction crews to the possible need for tile line repairs.

B. All tile lines shall be repaired with materials of the same or better quality as that which was damaged.

C. All damaged tile lines shall be immediately and temporarily repaired until such time that permanent repairs can be made.

D. Where tile lines are severed by water or sewer line trenches, non-compactable support must be added around the repaired tile lines in accordance with the attached detail drawings.

1. Within the trench, maximum rock size shall be 1 1/2 inch river gravel or 1 inch crushed stone for backfill under all tile lines.

2. There must be a minimum of one foot of separation between a tile line and the water or sewer line whether the line passes over or under the tile line.

3. In no instance will the grade of a tile line be changed.

E. Heavy construction equipment working within a water or sewer line right-of-way may crush shallow drainage tile. All tile lines intersecting the water or sewer line trench will be probed laterally for their entire length within the water or sewer line right-of-way to check for damaged tile. Probing must occur immediately prior to the permanent repair of any severed tile lines. If tile lines are found to be damaged, they must be repaired so they operate as well after construction as before construction began, and in a manner that is acceptable to the landowner.

F. All permanent tile line repairs must be made within 14 days of the date the damage occurred, weather and landowner permitting. If the landowner elects to make his/her own tile repairs, such damage payments will be negotiated with the Project Sponsor and must also be made within 14 days of the date of the completed repair work.

G. The Project Sponsor will remain liable for a period of three (3) years following the completion of the water or sewer lines to ensure that all tile line repairs do not fail. The Project Sponsor will not be responsible for tile line repairs that the Project Sponsor pays the landowner to perform.

FIELD TILE REPAIR

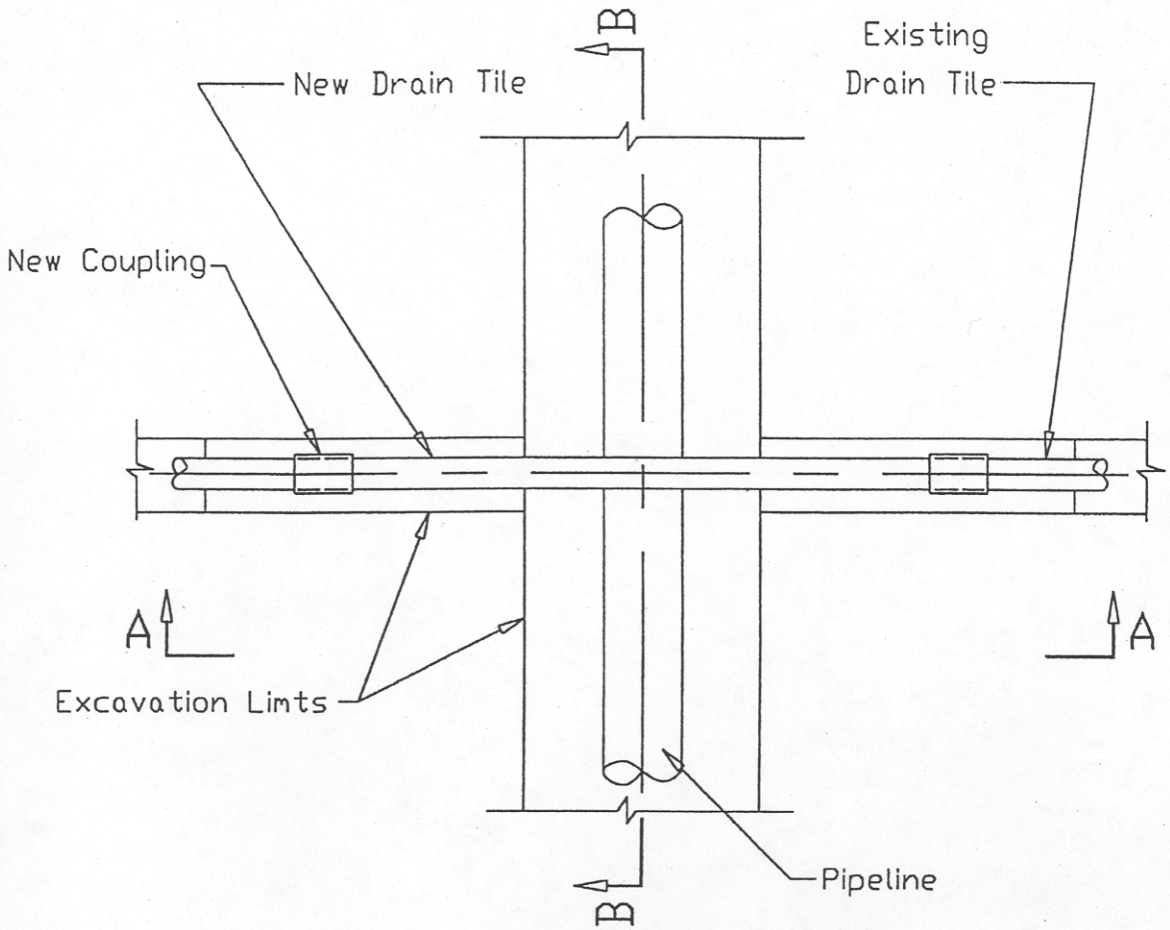

EXCAVATION PLAN

NOTES:

1. Coarse aggregate shall be gravel, crushed gravel, pit run gravel or crushed stone and shall conform to the requirements of IDOT Standard Specification for Road and Bridge Construction Article 1004.01 and CA-18 gradation.
2. Geotextile may be woven or non-woven and shall conform to the requirements of Class 1 in the attached table 1 or 2. In addition, when pipeline trench depth exceeds 10 feet, puncture strength (ASTM D 483) shall be 150 lbs or greater.
3. New tile should be equal to or better than existing tile. Dual Wall polyethylene tubing conforming to ASHTO M-252 or M-294 may be used where existing tile is rigid conduit (clay or concrete).

AUTOCAD2000

REFERENCE Project _____ Designed _____ Date _____ Checked _____ Date _____ Approved _____ Date _____	USDA NATURAL RESOURCES CONSERVATION SERVICE ILLINOIS	STANDARD DWG. NO. IL-ENG-150A SHEET 1 OF 2 DATE: 12/98

FIELD TILE REPAIR

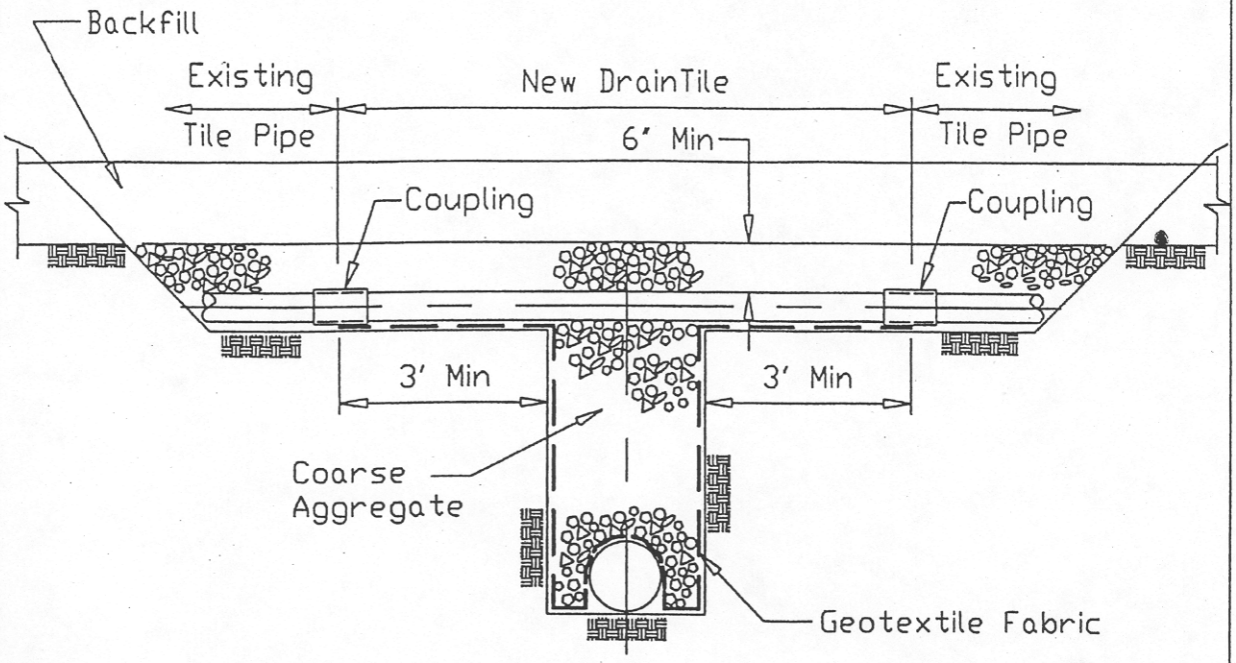

SECTION A-A

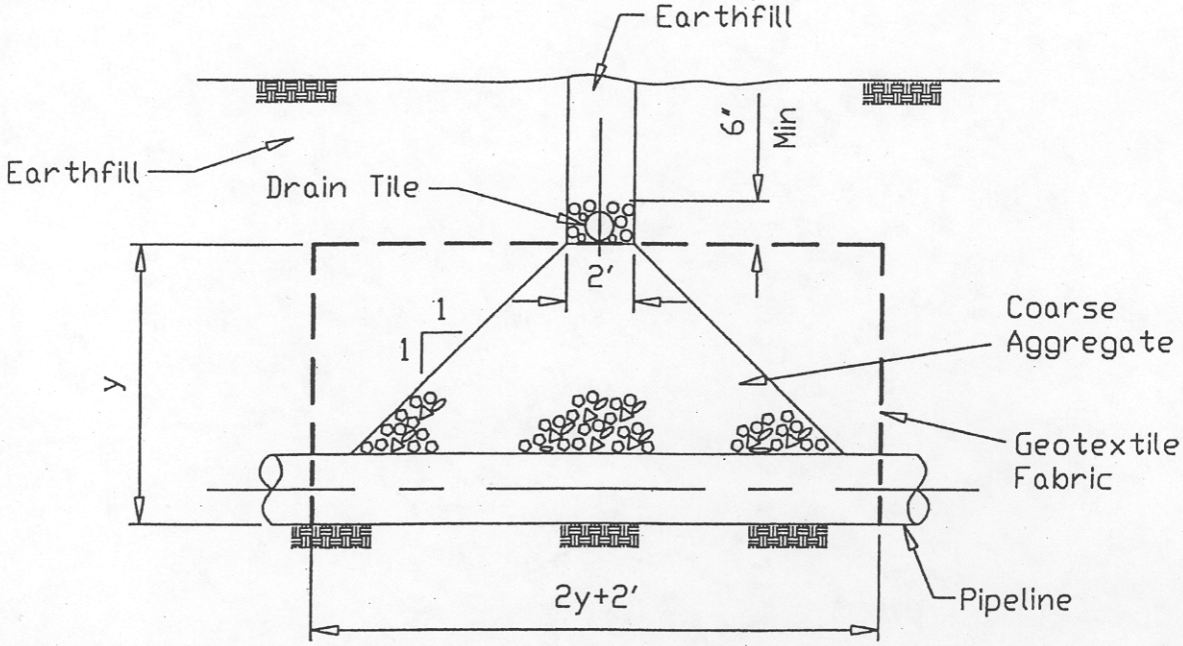

SECTION B-B

AUTOCAD2000

REFERENCE Project _____ Designed _____ Date _____ Checked _____ Date _____ Approved _____ Date _____	USDA NATURAL RESOURCES CONSERVATION SERVICE ILLINOIS	STANDARD DWG. NO. IL-ENG-150B SHEET 2 OF 2 DATE: 12/98

Material Specification 592—Geotextile

1. Scope
This specification covers the quality of geotextiles.

2. General requirements
Fibers (threads and yarns) used in the manufacture of geotextile shall consist of synthetic polymers composed of a minimum of 85 percent by weight polypropylenes, polyesters, polyamides, polyethylene, polyolefins, or polyvinylidene-chlorides. They shall be formed into a stable network of filaments or yarns retaining dimensional stability relative to each other. The geo-textile shall be free of defects and conform to the physical requirements in tables 592–1 and 592–2. The geotextile shall be free of any chemical treatment or coating that significantly reduces its porosity. Fibers shall contain stabilizers and/or inhibitors to enhance resistance to ultraviolet light.

Thread used for factory or field sewing shall be of contrasting color to the fabric and made of high strength polypropylene, polyester, or polyamide thread. Thread shall be as resistant to ultraviolet light as the geotextile being sewn.

3. Classification
Geotextiles shall be classified based on the method used to place the threads or yarns forming the fabric. The geotextiles will be grouped into woven and nonwoven types.

Woven—Fabrics formed by the uniform and regular interweaving of the threads or yarns in two directions. Woven fabrics shall be manufactured from monofilament yarn formed into a uniform pattern with distinct and measurable openings, retaining their position relative to each other. The edges of fabric shall be selvedged or otherwise finished to prevent the outer yarn from unraveling.

Nonwoven—Fabrics formed by a random placement of threads in a mat and bonded by heat-bonding, resin-bonding, or needle punching. Nonwoven fabrics shall be manufactured from individual fibers formed into a random pattern with distinct, but variable small openings, retaining their position relative to each other when bonded by needle punching, heat, or resin bonding. The use of nonwovens other than the needle punched geotextiles is somewhat restricted (see note 3 of table 592–2).

4. Sampling and testing
The geotextile shall meet the specified requirements (table 592–1 or 592–2) for the product style shown on the label. Product properties as listed in the latest edition of the "Specifiers Guide," Geotechnical Fabrics Report, (Industrial Fabrics Association International, 1801 County Road BW, Roseville, MN 55113-4061) and that represent minimum average roll values, are acceptable documentation that the product style meets the requirements of these specifications.

For products that do not appear in the above directory or do not have minimum average roll values listed, typical test data from the identified production run of the geotextile will be required for each of the specified tests (tables 592–1 or 592–2) as covered under clause AGAR 452.236-76.

5. Shipping and storage
The geotextile shall be shipped/transported in rolls wrapped with a cover for protection from moisture, dust, dirt, debris, and ultraviolet light. The cover shall be maintained undisturbed to the maximum extend possible before placement.

Each roll of geotextile shall be labeled or tagged to clearly identify the brand, class, and the individual production run in accordance with ASTM D 4873.

Table 592–1 Requirements for woven geotextiles

Property	Test method	Class I	Class II & III	Class IV
Tensile strength (pounds) 1/	ASTM D 4632 grab test	200 minimum in any principal direction	120 minimum in any principal direction	180 minimum in any principal direction
Elongation at failure (percent) 1/	ASTM D 4632 grab test	<50	<50	<50
Puncture (pounds) 1/	ASTM D 4833	90 minimum	60 minimum	60 minimum
Ultraviolet light (% residual tensile strength)	ASTM D 4355 150-hr exposure	70 minimum	70 minimum	70 minimum
Apparent opening size (AOS)	ASTM D 4751	As specified, but no smaller than 0.212 mm (#70) 2/	As specified, but no smaller than 0.212 mm (#70) 2/	As specified, but no smaller than 0.212 mm (#70) 2/
Percent open area (percent)	CWO-02215-86	4.0 minimum	4.0 minimum	1.0 minimum
Permitivity sec^{-1}	ASTM D 4491	0.10 minimum	0.10 minimum	0.10 minimum

1/ Minimum average roll value (weakest principal direction).
2/ U.S. standard sieve size.
Note: CWO is a USACE reference.

Table 592–2 Requirements for nonwoven geotextiles

Property	Test method	Class I	Class II	Class III	Class IV 3/
Tensile strength (lb) 1/	ASTM D 4632 grab test	180 minimum	120 minimum	90 minimum	115 minimum
Elongation at failure (%) 1/	ASTM D 4632	≥ 50	≥ 50	≥ 50	≥ 50
Puncture (pounds)	ASTM D 4833	80 minimum	60 minimum	40 minimum	40 minimum
Ultraviolet light (% residual tensile strength)	ASTM D 4355 150-hr exposure	70 minimum	70 minimum	70 minimum	70 minimum
Apparent opening size (AOS)	ASTM D 4751	As specified max. #40 2/	As specified max. #40 2/	As specified max. #40 2/	As specified max. #40 2/
Permittivity sec^{-1}	ASTM D 4491	0.70 minimum	0.70 minimum	0.70 minimum	0.10 minimum

1/ Minimum average roll value (weakest principal direction).
2/ U.S. standard sieve size.
3/ Heat-bonded or resin-bonded geotextile may be used for classes III and IV. They are particularly well suited to class IV. Needle-punched geotextiles are required for all other classes.

4. Rock Removal

A. The top 42 inches of a water or sewer line trench will not be backfilled with soil containing rocks that are larger than 3 inches in any dimension.

B. If trenching, blasting, or boring operations are required through rocky terrain, suitable precautions will be taken to eliminate the potential for rocks to become interspersed with the soil material that is placed back in the trench.

C. Rocks and/or soil containing rocks that are larger than 3 inches in any dimension must be hauled off the landowner's premises or disposed of on the landowner's premises at a location that is mutually acceptable to the landowner and the Project Sponsor.

5. Removal Of Construction Debris

All construction-related debris and material will be removed from the landowner's property. (Note: Such material to be removed would include litter generated by the construction crews.)

6. Compaction, Rutting, Fertilization, Liming

A. When water and sewer lines are buried in trenches that are **greater than 24 inches in width:**

1. Compaction will be alleviated on the trench and any adjacent work areas that are traversed by construction equipment. Cropland will be ripped at least 18 inches deep and pasture and woodland will be ripped or chiseled at least 12 inches deep.

2. Any other areas of the right-of-way which are traversed by construction equipment and related vehicles will be ripped or chiseled at least 12 inches deep.

3. At least 3 passes will be made over all lands to be ripped and/or chiseled.

4. All cropland that has been disturbed by construction activities will be limed and fertilized where necessary in order to benefit the current and/or next year's agricultural production or vegetative cover to control soil erosion.

B. When water and sewer lines are buried in trenches **less than 24 inches wide**, all right-of-way that has been traversed by construction equipment and related vehicles will be chiseled at least 12 inches deep with at least 3 passes being made.

C. All ripping and chiseling will be done at a time when the soils are dry enough for normal tillage operations to occur on undisturbed cropland adjacent to the areas to be tilled.

7. Land Leveling

A. The Project Sponsor will remain liable, for a period of two (2) years following the completion of a water or sewer line, to restore any right-of-way to its original elevation and contour should uneven settling occur or surface drainage problems develop due to inaccurate land leveling immediately following a water or sewer line's construction.

B. The Project Sponsor will provide the landowners with a telephone number and address that may be used to alert the Project Sponsor of the need to perform additional land leveling services.

8. Prevention Of Soil Erosion

A. The Project Sponsor will work with landowners to prevent excessive erosion on lands disturbed by construction. Reasonable methods will be implemented to control erosion. This is not a requirement, however, if the land across which a water or sewer line is constructed is bare cropland that the landowner intends to leave bare until the next crop is planted.

B. If the landowner and Project Sponsor cannot agree upon a reasonable method to control erosion on the landowner's right-of-way, the Project Sponsor will follow the recommendations of the appropriate county Soil and Water Conservation District if the landowner so requests.

9. Repair Of Damaged Soil Conservation Practices

All soil conservation practices (such as terraces, grassed waterways, filter strips, concrete structures, dams, etc.) that are damaged by water or sewer line construction will be restored to at least their pre-construction condition.

10. Damages To Private Property

A. With the exception of tile line repairs, the Project Sponsor will repair, replace, or pay to repair or replace damaged private property within 45 days, weather and landowner permitting, after a water or sewer line has been constructed across any affected property.

B. Similar relief for damages will be extended by the Project Sponsor for any construction-related damages that occur off of the established water or sewer line right-of-way.

C. The Project Sponsor will remain liable to correct damages to private property beyond the initial construction of a water or sewer line, to those damages incurred by future construction, operation, maintenance, and repairs.

11. Clearing Of Trees And Brush From The Easement

A. If trees are to be removed from the right-of-way, the Project Sponsor will consult with the landowner to see if there are trees of commercial or other value to the landowner.

B. If there are trees of commercial or other value to the landowner, the Project Sponsor will allow the landowner the right to retain ownership of the trees with the disposition of the trees to be negotiated prior to the commencement of land clearing.

C. The Project Sponsor will follow the landowner's desires which are consistent with any applicable laws or ordinances regarding the disposal of trees, brush, and stumps of no value to the landowner by burning, burial, etc., or complete removal from any affected property.

12. Interference With Irrigation Systems

A. If a water or sewer line intersects an operational (or soon to be operational) spray irrigation system, the Project Sponsor will establish with the landowner an acceptable amount of time the irrigation system may be out of service.

B. If an irrigation system interruption results in crop damages, either on the water or sewer line right-of-way or off the right-of-way, the landowner will be compensated for all such crop damages.

C. If it is feasible and mutually acceptable to the Project Sponsor and the landowner, temporary measures will be implemented to allow an irrigation system to continue to operate across land on which a water or sewer line is also being constructed.

13. Ingress And Egress Routes

Prior to any water or sewer line construction, the Project Sponsor and the landowner will reach a mutually acceptable agreement on the route that will be utilized for entering and leaving the water or sewer line right-of-way should access to the right-of-way not be practical or feasible from adjacent segments of the water or sewer line right-of-way or from public highway or railroad right-of-way.

14. Temporary Roads

A. The location of temporary roads to be used for construction purposes will be negotiated with the landowner.

B. If temporary roads must be constructed, they will be designed to not impede surface drainage soil erosion on or near the temporary roads will be minimized.

C. Upon abandonment, temporary roads may be left intact through mutual agreement of the landowner and the Project Sponsor.

D. If the temporary roads are to be removed, the right-of-way upon which the temporary roads are constructed will be returned to their previous use and restored to the same or better condition as existed prior to their construction.

15. Weed Control

A. On any right-of-way over which the Project Sponsor has jurisdiction as to the surface use of such land (well heads, pump or lift stations, valve sites, etc.), the Project Sponsor will provide for weed control in a manner that does not allow for the spread of weeds onto adjacent lands used as cropland.

B. The Project Sponsor will remain liable for the costs incurred by owners of land adjacent to surface facilities when the landowners must control weeds on their land which have spread from land accommodating water or sewer line surface facilities.

16. Pumping Of Water From Open Trenches

A. In the event it becomes necessary to pump water from open trenches, the Project Sponsor will pump the water in a manner that will avoid damaging adjacent agricultural land. Such damages include, but are not limited, inundation of crops for more than 24 hours and the deposition of sediment and gravel in fields, pastures, ditches, and any water bodies or water courses.

B. If it is impossible to avoid water-related damages as described in 16.A. above, the Project Sponsor will compensate the landowners for the damages or will correct the

damages so as to restore the agricultural land, water courses, etc. to their pre-existing condition.

C. All pumping of water shall comply with existing drainage laws, local ordinances relating to such activities, and provisions of the Clean Water Act.

17. Aboveground Facilities

Aboveground facilities shall be located so they will not be a hindrance to ongoing agricultural activities occurring on the lands adjacent to the facilities. First priority shall be made to locating aboveground facilities on right-of-way that is not used as cropland. If this is not feasible, such facilities shall be located so as to incur the least hindrance to the adjacent cropping operations (i.e., located in field corners or areas where at least one side is not used for cropping purposes).

18. Advance Notice Of Access To Private Property

A. The Project Sponsor will provide the landowner or tenant with a minimum of 24 hours prior notice before accessing his/her property for the purpose of constructing a water or sewer line.

B. Prior notice shall first consist of a personal contact or a telephone contact, whereby the landowner or tenant is informed of the Project Sponsor's intent to access the land. If the landowner or tenant cannot be reached in person or by telephone, the Project Sponsor will mail or hand deliver to the landowner or tenant's home a dated, written notice of the Project Sponsor's intent. The landowner or tenant need not acknowledge receipt of the written notice before the Project Sponsor can enter the landowner's property.

19. Reporting Of Inferior Agricultural Impact Mitigation Work

Prior to the installation of any water or sewer line, the landowners will be provided with a number they can call to alert the Project Sponsor should landowners observe inferior work relating to the agricultural impact mitigation work which is performed on their property.

20. Indemnification

For any water or sewer line installation, the Project Sponsor will indemnify all landowners, their heirs, successors, legal representatives, and assigns from and against all claims, injuries, suits, damages, costs, losses, and expenses including legal fees resulting from or arising out of the construction, maintenance, removal, repair, use or existence of a water or sewer line, whether heretofore or hereafter constructed, including damage to a water or sewer line or any of its appurtenances and the leaking of its contents, except where claims, injury, suits, damages, costs, losses, and expenses are caused by the negligence or intentional acts of the landowners, their heirs, successors, legal representatives, and assigns.

Technical Specifications

Intentionally Blank

SECTION 000100
TABLE OF CONTENTS

DIVISION 1 – GENERAL REQUIREMENTS

011100 SUMMARY OF WORK 011100/1-12

012200 UNIT PRICES 012200/1-5

014126 PERMIT REQUIREMENTS 014126/1-3

014500 QUALITY CONTROL 014500/1-2

015526 TRAFFIC CONTROL 015526/1-2

017123 FIELD ENGINEERING AND SURVEYING 017123/1-3

DIVISION 3 – CONCRETE

033000 PORTLAND CEMENT CONCRETE 033000/1-9

DIVISION 5 – METALS

050800 MISCELLANEOUS METALS 050800/1-3

051200 STRUCTURAL STEEL 051200/1-4

DIVISION 7 – THERMAL AND MOISTURE PROTECTION

079000 JOINT FLLERS AND SEALANTS 079000/1-4

DIVISION 9 – FINISHES

099000 PAINTS AND COATINGS 099000/1-9

DIVISION 27 – CONNECTORS

271323 OPTICAL FIBER CONNECTOR 271323/1-2

271324 OPTICAL FIBER HANDHOLD 271324/1-2

DIVISION 31 – EARTHWORK

311000 SITE CLEARING 311000/1-2

311200 OBSTRUCTION REMOVAL AND REPLACEMENT 311200/1-2

311313 TREE REMOVAL 311313/1-2

312213 LINEAR GRADING 312213/1-2

312300 EXCAVATING, FILLING AND GRADING 312300/1-14

312313 SUBGRADE PREPARATION 312313/1-2

312323.13 SUBGRADE COMPACTION 312323.13/1

312500 SEDIMENTATION AND EROSION CONTROL 312500/1-2

313400 EMBANKMENT PROTECTION 313400/1-2

317100 TRENCHLESS DIRECTIONAL BORING 317100/1

DIVISION 32 – EXTERIOR IMPROVEMENTS

321123 AGGREGATE BASE COURSE 321123/1-3

321200 PAVEMENT RESTORATION 321200/1-2

323126 WOVEN WIRE FENCING 323126/1-2

323127 BARBED WIRE FENCING 323127/1-2

329000 FERTILIZING, SEEDING, AND MULCHING 329000/1-7

DIVISION 33 – UTILITIES

330500 UTILITY MATERIALS 330500/1-19

330523.13 HIGHWAY CROSSINGS 330523.13/1-2

331100 WATER DISTRIBUTION 331100/1-7

338223 OPTICAL FIBER CABLING 338223/1-4

DIVISION 40 – PROCESS INTEGRATION

404616 POLYETHYLENE ENCASEMENT TUBING 404616/1

DIVISION 01 – GENERAL REQUIREMENTS

SECTION 011100 – SUMMARY OF WORK

1.00 GENERAL

A. This project consists of the construction of finished watermain and fiber optic line from St. Mary's Road to about N Centennial Road running along Illinois State Route 16.

B. This project is located in Sections 20-30, English Township 8 North, Range 12 West of the Fifth Principal Meridian, in the County of Jersey, Illinois.

1.01 SCOPE OF WORK

A. This contract includes but is not limited to the following items of work, which are listed for the convenience of the Contractor in understanding the intended scope of work:

1. Site work, including excavation, fill, compaction, subgrade preparation, clearing and grubbing.

2. Directional boring.

3. Bore and Jack

4. Clean up, fertilize, ripping, final grading

5. Water and fiber optic line installation with related appurtenances

6. All items incidental to total completion.

7. Follow all OSHA, IDOL, Federal, State, County and local codes, Standard Specifications for Water and Sewer Construction in Illinois,

1.02 OWNER

A. The Owner, as referred to in these Contract Documents, is Illinois Alluvial Regional Water Company, 14500 State Highway 16, Fieldon, Illinois 62031.

1.03 Engineer

A. The Engineer, as referred to in these Contract Documents, is MECO-Heneghan Engineers, LLC. Acting personally or through his authorized representative for such act by the Owner.

1.04 SHOP DRAWING SUBMITTAL

A. The Contractor agrees that shop drawing submittals processed by the Engineer are not Change Orders; that the purpose of shop drawing submittals by the Contractor is to demonstrate to the Engineer that the Contractor understands the design concept, that he demonstrates his understanding by indicating which equipment and material he intends to furnish and install and by detailing the fabrication and installation methods he intends to use. The Contractor shall analyze the shop drawings and samples before submitting them to the Engineer and shall certify that they meet the intent of the drawings and specifications.

B. Shop drawings submitted to the Engineer for review shall be assembly and installation drawings, including electrical, structural, and control details, together with detailed specifications and data covering materials used, parts, devices, and accessories forming a part of the equipment furnished.

C. Each shop drawing submitted must be clearly and uniformly identified and include the following:

1. Drawing number.

2. Revision number and date (first submittals to have revision number of zero).

3. Descriptive drawing title.

4. Manufacturer.

5. Supplier.

6. Contractor.

7. Owner, city and state.

8. Project name.

9. Contract number and name.

D. Upon receipt of submitted shop drawings or samples, the Engineer will review the drawings and mark "Conforms with the design concept and contract documents. The contractor's responsibility for dimensions, errors, omissions or deviations from the contract documents covered in this submittal is not relieved by this review, Revise and Resubmit, Rejected, Submit Specified Item".

E. If the drawings are marked ", Revise and Resubmit, Rejected, Submit Specified Item ", the Contractor must take appropriate corrective action and then submit corrected, new, or replacement drawings to the Engineer. The engineer will record engineer's time for reviewing a third or subsequent resubmittal of Shop Drawing or Sample, the contractor shall be responsible for engineer's charges to owner for such time. at the following rates:

Senior Principal Engineer	$240.00 per hour
Principal Engineer I:	$200.00 per hour
Engineer Manager:	$190.00 per hour
Senior Engineer II:	$175.00 per hour
Senior Engineer I:	$160.00 per hour
Engineer:	$140.00 per hour
Clerical:	$ 85.00 per hour

F. Minimum charges shall be one hour for each category involved for each time review required.

G. Payment shall be made each month or as billed and is due and payable upon receipt of invoice. The Contractor's request for final payment will not be approved or paid until such charges are paid in full.

H. Contractor further agrees that if deviations, discrepancies or conflicts between shop drawing submittals and the contract documents in the form of design drawings and specifications are discovered either prior to or after shop drawing submittals are processed by the Engineer, the design drawings and specifications shall control and shall be followed.

1.05 CONTROL AND REGULATION OF WORK

A. The Engineer is the representative of the Owner and shall have the authority to exercise his judgment and initiative during the construction phase. He may, without written order or other formality, correct obvious errors in the drawings and specifications or make other adjustments required to adapt the work to existing conditions or circumstances, provided such corrections and revisions are consistent with the intent of the drawings and specifications, do not materially affect the total contract price and vary the proportion and quantity of only those items of work for which unit prices are contained in the Contract.

1.06 GENERAL CONDITIONS OF CONSTRUCTION

A. The Contractor shall, at all times, carry on the work in such a manner as to minimize the interference of traffic, utility, and municipal services and adjoining property.

B. The work shall be carried out in such a manner that all physical structures and natural features are restored to at least as good a condition as they were in before the work was done. It is understood that where specifications apply, their provisions shall determine the character and manner of restoration of existing structures and features.

C. Any damage done to private or public property shall be repaired by the Contractor to the satisfaction of the Owner of said property, and the cost thereof shall be included in the price bid by the Contractor for other items.

D. Valve and service boxes, valve vaults, gas drips, and other appurtenances on utility lines shall be kept free of excavated material and shall be left accessible and operable at all times.

E. Construction in Easements: While in easement across private property, the Contractor shall confine all operations in the easement area and shall be responsible and liable for all damages outside of the easement area. Trees, fences, shrubbery or other type of surface improvements located in easements will require protection during construction. The provisions of this specification shall apply to all easement areas as well as the public right-of-way. Precautions shall be taken by adequate shoring or other approved method to prevent any cave in or subsidence beyond the easement limits or damage to improvements within the easement. In general, the easement area is intended to provide reasonable access and working area for efficient operation by the Contractor. Where easement space for efficient operation is not provided, the Contractor shall be responsible for organizing his operations to perform within the restrictions as shown on the drawings.

1. Easements are on file with the Engineer and should be reviewed by all bidders prior to the bid date. All bidders are responsible for including in their bid all costs associated with or caused by any easements involved in the project. The Contactor (successful bidder) shall be furnished copies of these documents prior to construction so that he may contain his construction activities to the permissible areas listed in each easement.

2. Some property owners have restrictive clauses in their easement regarding trees and shrubbery, fences, private utilities, width of easement, forcing construction in road right-of-way, etc.. The Contactor shall comply with these restrictive clauses. It is entirely the Contactor’s responsibility to be aware of all restrictions and easements, and no increase in the contract price shall be allowed for any construction methods, landowner notifications, etc., necessary to comply with the restrictions. The Contactor shall refer to the individual easements for details regarding the restriction(s).

3. The Contactor's attention is called to the fact that the water main construction will involve, in most cases, private easements (property) and that all improvements such as drainage ditches, plantings, culverts, active utilities, signs, outbuildings, field tiles, and any other miscellaneous, privately and/or publicly owned, property shall be restored to a condition equal to or better than their existing state of repair. Should it become necessary that the Contactor relocate/remove any obstruction encountered throughout construction he should consult with the Engineer's Resident Project Representative (RPR) before proceeding. Should it become necessary that the Contactor proceed across/over property supporting a growing cash crop (example: corn, legumes, soybeans, and wheat), he should so advise the Engineer's RPR, whereby the RPR shall note/record and make an assessment of the affected area (crop damage). When the Contactor follows the above instructions relative to reporting areas of crop damage, and adheres to other instructions by the Engineer's RPR and also uses good judgment, it is, therefore, the intent that the Owner shall reimburse the property owner/renter an equitable amount for damage done by the Contactor to growing cash crops. Should, in the judgment of the Engineer and Owner it be determined that the Contactor occupied an area greater than necessary for his particular operation relative to crop damage and other construction efforts, the Contactor shall be held liable for the cost applicable to the excess area/damage caused by him. The Contactor shall apply lime and fertilizer to disturbed crop areas in accordance with Section 329000. The same procedure, as for growing cash crops, shall be adhered to by the Contactor when it comes to ornamental trees, shrubs, flowers, fences, waterways, lawns, gardens, etc., relative to the need to affect, relocate, construct nearby, or transplant such items during the Contactor’s operations. The Contactor shall be responsible and liable for all damages and claims caused by his operations to shrubs, trees, flowers, lawns, fences,

gardens, orchards, nursery stock, etc., unless directed by the Engineer with the exceptions of growing cash crops (i.e., legumes, corn, soybeans, wheat). No additional compensation will be allowed for the above beyond the contract unit prices for the specified items of work listed in the Bid Schedule.

4. The contractor is reminded that his work must remain within the construction easement, as specified on each individual easement. Any construction activity outside the easements provided solely at the contractor's risk. Responsibility and liability,

1.07 PERMITS, CERTIFICATES, LAWS, AND ORDINANCES

A. The Contractor shall, at his own expense, procure all permits, certificates and licenses required of him by law for the execution of this work. The Contractor shall comply with all Federal, State and local laws, ordinances, or rules and regulations relating to the performance of the work.

B. The Owner has secured the following permits, included at the end of these specifications, that shall remain in effect throughout the project:

1. Illinois Environmental Protection Agency Water Pollution Control Permit
2. Illinois Department of Transportation Highway Bore Permit/s
3. Illinois Department of Transportation Utility Construction Permit/s
4. Richwood Township Road Permit/s
5. Jersey County Highway Permit/s

C. The Contractor shall be responsible for coordination with the appropriate agencies to secure the following permits:

1. Illinois Environmental Protection Agency Land Disturbance Permit

D. A sediment and erosion control specification has been included (Section 312500) for reference. The Contractor will be responsible for preparing the needed documentation for a SWPPP and secure the NPDES coverage and maintain compliance through the completion of this construction project.

1.08 CONSTRUCTION SCHEDULING AND PRE-CONSTRUCTION CONFERENCE

A. The successful Contractor shall attend a pre-construction meeting with the Engineer prior to any construction. The Engineer will schedule the meeting promptly following the contract awards. At this meeting, the Contractor shall present a work schedule, work sequence, detailed cost breakdown and list of subcontractors.

B. The work schedule shall include all anticipated start and completion dates for items of work in this Contract.

C. The Contractor shall submit updated schedules to the Engineer weekly at the meeting with the Engineer and RPR.

1.09 LOCAL UTILITIES

A. Underground facilities, structures, and utilities have been plotted from available surveys and records and, therefore, their locations must be considered as approximate only. There may be others, from the existence of which is at present not known. Verification of the locations of underground utilities, shown or not shown, will be the responsibility of the construction contractor.

B. The Contractor shall avoid interference or damage to any utilities. If the Contractor causes damage to utilities due to carelessness or neglect, the repairs shall be made by the owner of the utility involved, and

all charges made for necessary repairs and replacements shall be borne by the Contractor. Any existing utilities encountered in the field that conflict with the proposed water main alignment and are not shown on the plans shall be relocated via a change order.

C. Utilities may be located by calling 811. Utilities that are not a part of the Illinois One-Call System must be contacted individually.

D. The Contractor shall notify all owners of subsurface facilities of his planned operations and have owners locate all facilities prior to construction. Any delays due to conflicts with such facilities shall not be cause for extra payment.

E. The Contractor shall satisfactorily shore, support and protect any and all structures and all pipes, sewers, drains, conduits, and other facilities, and be responsible for any damage resulting thereto. The Contractor shall not be entitled to any damages or extra pay on account of any postponements, interference or delay caused by any such structures and facilities being on the line of the work, whether they are shown on the drawings or not.

F. The Contractor shall take all reasonable precautions against damage to existing utilities. However, in the event of a break in an existing water main, gas main, sewer or underground cable, he shall immediately notify a responsible official from the organization operating the utility interrupted. The Contractor shall lend all possible assistance in restoring service and shall assume all costs, charges, or claims connected with the interruption and repair of such services.

G. The Contractor may move utilities with utility owners permission, at the Contractor's expense.

1.10 LOCAL CONDITIONS

A. The Contractor shall satisfy himself regarding all local conditions affecting the work by personal investigation. Information derived from maps, plans, and specifications, available through the Owner, Engineer or other agencies, shall not relieve the Contractor from his responsibility hereunder, or from fulfilling any and all of the terms and requirements of this contract.

1.11 SUBSURFACE INVESTIGATION

A. The construction site has been test drilled for soil conditions.

B. Soil borings were made in the course of project design within the project area. A copy of this subsurface exploration material is not included in the plans and specifications or made part of contract documents but available upon request.

C. There is no express or implied guarantee as to the accuracy of completeness of the subsurface information, or to the interpretation thereof by the Owner, the Engineer, or any of their representatives. The subsurface information or copies thereof do not form a part of this or any other Contract Documents issued by the Owner for this project.

D. Each prospective bidder shall make his own interpretation of subsurface information issued to him, and shall, at this own expense, make any surveys and investigations as he may deem necessary to evaluate conditions which will affect performance of the work.

1.12 PROTECTION OF THE SITE

A. Except as otherwise provided herein or on the plans, the Contractor shall protect all existing structures, fences, sheds, garages, walks, pipelines, trees, shrubs, lawns, etc., during the progress of this work. The Contractor shall be responsible for removing from the site all excess excavation, debris and unused materials and shall, upon completion of the work, restore the site as nearly as possible to its original condition. This restoration would include the replacement of any facilities or landscaping which has been damaged, and will be done at the Contractor's expense.

B. The Contractor shall provide continuous erosion control throughout the entire construction period through the use of berms, dikes, dams, sediment basins, fiber mats, netting, gravel, mulches, grasses, slope drains and other erosion and sediment control devices or methods required to assure effective and continuous erosion control throughout the construction period.(See Section 312500)

1.13 RESPONSIBILITY OF CONTRACTOR FOR BACKFILL SETTLEMENT

A. The Contractor shall be responsible, financially and otherwise, for:

1. Any and all settlement and erosion of trench and other backfill which may occur from the time of original backfilling until the expiration of a period of five years from and after the date of final acceptance of the entire Contract under which the backfilling work was performed.

2. The refilling and repair of all backfill settlement and erosion and the repair or replacement to the original or better condition of all pavement, top surfacing, driveways, curbs, gutters, walks, surface structures, utilities, and drainage facilities, sod and shrubbery, which have been removed or destroyed in connection with backfill placement operations.

3. Any and all damage claims filed with or court actions brought against the Owner for and on account of any damage or damages directly or indirectly caused by said backfill settlement or erosion.

4. Any and all damages claims for additional fertilizer, ripping, and new top soil due to settlement or erosion.

B. The Contractor shall make, or cause to be made, all necessary backfill placement, and repairs or replacement of appurtenances thereto, immediately from and after due notifications by the Engineer or Owner of backfill settlement and erosion and resulting damage at any designated location or locations. Including but not limited to soil testing, ripping, subsoiling etc. If the Contractor does not make the necessary repairs and the Owner deems it necessary, the Owner may make the necessary repairs at the Contractor's expense.

1.14 CONSTRUCTION LIMITS

A. The Owner has secured private easements for the required work where the work is shown on private property. All work on State, County, Township or Railroad right-of-way shall be carried out in accordance with the requirements of the governing authority. Any areas needed for construction which have not been secured by the Owner shall be acquired by the Contractor at his sole expense, and any extra costs shall not be a basis for extra payment, as such additional areas shall be considered as a matter of convenience.

1.15 PROTECTION AND STORAGE OF EQUIPMENT AND MATERIALS

A. The Contractor shall exercise care in the protection of materials and equipment furnished and/or installed under this Contract while they are in storage at the site, and during and after installation prior to final acceptance. Except as specifically noted to the contrary hereinafter, the Contractor shall be responsible for providing for any on or off-site warehousing or storage, which may be necessary to adequately protect such materials and equipment.

B. Store, handle and ship pipe, fittings and equipment so as to prevent permanent deformation or crimps in the materials.

C. Exercise care and protect all equipment and materials during storage, shipment, and prior to delivery and acceptance. Keep openings in pipe, vessels, equipment and machinery closed with adequate durable covers after final shop inspection.

D. Adequately crate, block, anchor and protect material for shipment. Replace items damaged without expense to Owner.

1.16 DEFECTIVE EQUIPMENT

A. In the event of failure of equipment to conform to specifications or to operate satisfactorily, Owner shall have right to operate equipment until defects are corrected and guarantees met.

B. Owner shall have right to operate rejected equipment until it is replaced, without cost for depreciation, use or wear.

C. Contractor shall remove defective equipment from operation for examination, adjustment, alteration or change only at times approved by the Owner.

1.17 INTERFERENCE WITH TRAFFIC

A. The work shall be carried out at all times in a manner causing a minimum of interference with traffic. The Contractor shall provide necessary warning signs, lights and flagmen, where required, to expedite the movement of traffic. He shall cooperate at all times with the traffic authorities.

B. In no case shall traffic be completely blocked in a street or roadway without the express consent of the Owner and traffic authority.

1.18 CONTRACTOR UTILITIES

A. The Contractor shall make all arrangements and pay all costs for necessary quantities of water for purposes of filling, flushing, disinfecting and placing the system into service for the Owner's use. The Contractor must furnish any hoses, connections, temporary meters, etc., to convey the water to the new piping. Volumes and pressures in excess of the available supply shall be at the expense of the Contractor.

B. Power and other necessary utilities will be obtained by the Contractor at his own expense from the public utility or from other sources.

1.19 EXPLOSIVES

A. The Contractor shall comply with all laws, ordinances, applicable safety code requirements, and regulations relative to the handling, storage and use of explosives and the protection of like and property. He shall be responsible for all damage caused by his blasting operations.

1.20 SAFETY

A. To protect persons from injury and to avoid property damage, adequate barricades, construction signs, torches, red lanterns and guards as required shall be placed and maintained by the Contractor at his expense during the progress of the construction work and until it is safe for traffic to use the roads and streets. All material piles, equipment and pipe which may serve as obstructions to traffic shall be enclosed by fences or barricades and shall be protected by proper lights when the visibility is poor. The rules and regulations of the local authorities respecting safety provisions shall be observed.

B. Temporary support, adequate protection and maintenance of all underground and surface structures, drains, sewers, and other obstructions encountered in the progress of the work shall be furnished by the Contractor at his expense. The structures which may have been disturbed shall be restored upon completion of the work.

C. Property and surface structures shall be protected during construction operations unless their removal for purposes of construction is authorized by the Engineer. Manmade surface improvements which are moved or disturbed by the Contractor shall be restored to the original condition, after construction is completed, at the Contractor's expense.

D. Any trees or shrubbery which are located within the easement may be removed by the Contractor if they interfere with normal construction requirements. Care should be taken to leave in place as many trees as possible. Responsibility for any damage or claims for damage caused by construction operations outside of the easement shall be assumed by the Contractor. Settlement of any damage or claims for damage shall be made by the Contractor as soon as possible and in a manner satisfactory to the Engineer. Any grass

area disturbed by the construction shall be seeded in accordance with the governing specification, Section 02374.

1.21 CONTROL WORK

A. Basic horizontal and vertical control points are shown on the Plans. These points shall be used as datum for the Work. All additional survey, layout, and measurement work shall be performed by Contractor as a part of the Work. Engineer will stake permanent and Temporary easements.

B. From the control points and bench marks designated by the Engineer, the Contractor shall complete the layout of the work and shall be responsible for all measurements that may be required for execution of the work to the location and limits required.

C. Contractor shall submit to Owner's Resident Project Representative one copy of all construction survey notes and data.

D. To the extent practicable, Contractor shall maintain all slope and cut stakes in excavation areas until the adjacent excavation has reached final grade or subgrade.

E. When so requested by the Owner's Resident Project Representative, the Contractor shall furnish one laborer to assist the Owner's Resident Project Representative in spot-checking of the construction layout and grades.

1.22 LINES AND GRADES

A. All staking required for the project shall be by the Contractor. The Contractor shall be required to construct all facilities to the lines and grades as shown on the plans.

B. When a pipeline is shown on the plans to parallel closely to the highway right-of-way or property line, it is intended to be installed as staked, unless deviations from this may be required to avoid obstructions, existing utilities, etc.

C. When a pipeline is shown on the plans or otherwise necessary to construct the pipeline on public right-of-way, the location of said facilities shall meet all requirements of the governing authority.

1.23 SANITARY FACILITIES

A. The Contractor shall furnish and maintain portable toilets for construction employees during the construction period. These toilets are to be chemical-type conveniently located and secluded from public view and shall meet the requirements of the State Board of Health and the Federal Safety Construction Act, and shall be maintained in a clean and sanitary condition.

1.24 ACCEPTANCE

A. The Contractor shall notify the Owner when the work is substantially completed, and is ready for testing. The Resident Project Representative shall be given advance notice and shall observe all pipeline testing and equipment testing until all are successfully tested. Final acceptance of the work shall not be given until: acceptable test results conforming to the plans, specifications and governing authorities rules and regulations have been met; approval of the cleanup work is provided soil tested, fertilized, and ripped as necessary to satisfy land owner and; the operation of new equipment is acceptable to and approved by the Owner, Engineer and appropriate governing authority.

1.25 TO QUALIFY FOR PAYMENT

A. To qualify for payment as provided in the General Conditions, the Contractor must:

1. Transfer title of materials, for which payment is requested, to the Owner.

2. Provide the necessary and applicable insurance to protect the Owner's interest in said materials.

1.26 PAYMENTS FOR EXTRA WORK

A. Written notice of claims for payment for Extra Work shall be given by the Contractor within ten (10) days after receipt of instructions from the Owner as approved by the Engineer to proceed with the Extra Work and also before any work is commenced, except in emergency endangering life or property. No claim shall be valid unless so made. In all cases, the Contractor's itemized estimate sheets showing all labor and material shall be submitted to the Engineer. The Owner's order for Extra Work shall specify any extension of the Contract Time and one of the following methods of payment:

1. Unit prices or combinations of unit prices which formed the basis of the original Contract.

B. A lump sum based on the Contractor's estimate, accepted by the Owner, and approved by the Engineer.

C. Cost reimbursement for the actual costs for labor, direct overhead, materials, supplies, equipment and other services necessary to complete the work plus an amount to be agreed upon to cover the cost of the general overhead and profit to be negotiated.

1.27 PAYMENT FOR WORK SUSPENDED BY THE OWNER

A. If the work or any part thereof shall be suspended by the Owner and abandoned by the Contractor, the Contractor will then be entitled to payment for all work done on the portions so abandoned. Payment for the work performed shall be based on one of the following methods of payment:

1. A lump sum based on the Contractor's estimate, accepted by the Owner, and approved by the Engineer.

2. Cost reimbursement for the actual costs for labor, direct overhead, materials, supplies, equipment and other services necessary to complete the work plus an amount to be agreed upon to cover the cost of general overhead and profit to be negotiated.

1.28 LIMITED WARRANTY

A. All manufacturers furnishing new equipment for the Project shall, in writing, warranty their equipment to be free of defects in materials and factory workmanship for a period of one (1) year from the date of start-up or five (5) years from the date of shipment, whichever comes first, providing the product is properly installed and operated under normal conditions.

B. The warranty shall state that material and labor for repair or parts replacement will be free of charge to the Owner during this period.

1.29 GENERAL GUARANTY

A. The Contractor shall guarantee all materials and equipment furnished and work performed for a period of five (5) year from the date of completion and acceptance of the work. The Contractor warrants and guarantees for a period of five (5) year from the date of completion and acceptance of the work that the completed work is free from all defects due to faulty materials or workmanship and the Contractor shall promptly make such corrections as may be necessary by reason of such defects including the repairs of any other damages that were caused by defects in the work. The Contractor shall warrant and guarantee for five (5) years from the date of completion and acceptance of work for cleanup final grading, settling, and fertility. See section 1.13

B. The Owner will give notice of observed defects with reasonable promptness. In the event that the Contractor should fail to make such repairs, adjustments, or other work that may be made necessary by such defects, the Owner may do so and charge the Contractor the cost thereby incurred.

C. In an emergency where, in the judgment of the Owner, delay would cause serious loss or damage, repairs and replacement of defects in the work and damage caused by defects may be made without notice being sent to the Contractor, and the Contractor shall pay the cost thereof.

D. The Performance Bond shall remain in full force and effect through the guarantee period.

1.30 MANUALS

A. The Contractor shall furnish to the Engineer four (4) complete new manuals which describe the operation and maintenance of each piece of major equipment furnished.

1.31 SUBSURFACE PIPELINES, STRUCTURES AND INFORMATION

A. The Contractor shall notify all owners of subsurface facilities of his planned operations, and shall have such owners locate all facilities prior to construction. Any delays due to conflicts with such facilities shall not be cause for extra payment (marked or unmarked).

1.32 COPIES OF PLANS AND SPECIFICATIONS

A. The Contractor will be furnished without cost to him, two copies of all specifications and drawings, together with any and all addenda thereto. The Contractor shall keep one copy of all such specifications and drawings constantly accessible on the work site.

1.33 ITEMS INCIDENTAL TO CONSTRUCTION

A. Any item of work, specified or implied, which does not appear as a specific pay item in the proposal, but is essential to the proper completion of the project, shall be considered incidental to the construction and shall be included in the cost of other items.

1.34 APPLICABLE CODES AND STANDARDS

A. The latest revision of all codes and standards at the time of bid opening shall govern.

B. Applicable codes and standards referred to in these specifications shall establish minimum requirements for equipment, materials, construction, and shall be superseded by more stringent requirements of drawings and specifications when and where they occur.

C. Any conflicts between specifications and applicable codes and standards shall be referred to the Engineer for a decision thereon.

1.35 SUBSTITUTIONS, "OR EQUAL" PROJECTS

A. The Bidder is to prepare his Bid based upon equipment and materials which meet the specifications and requirements for the same, as specified and indicated on the drawings. No request for acceptance or approval of equipment or materials will be entertained prior to the opening of bids. The Contractor shall be responsible for using equipment and materials which meet the specifications and requirements as indicated on the drawings.

B. The Contractor shall submit all shop drawings and product information after award of a contract for approval of equipment and materials. The proposed product cannot be used until it is approved by the Engineer.

C. In all cases, the Engineer shall be the sole judge as to whether a proposed product is to be approved and the Contractor shall have the burden of proving, at his expense, to the satisfactions of the Engineer, that the proposed product is similar and equal to the named product. In making such determination, the engineer may establish such criteria as he may deem proper that the proposed product must meet in order for it to be approved.

D. Where the Engineer approves a product proposed by the Contractor, and such product requires a revision or redesign of any part of the work covered by the Contract, all such revision and redesign and all new drawings and details required therefor, shall be subject to the approval of the Engineer, and shall be provided by the Contractor at his own expense. If an approved substitution of a product requires a different quantity and/or arrangement of ductwork, piping, wiring, or any part of the work from that in the Contract

Documents, the Contractor shall provide the same at his own expense.

E. Whenever any product is specified in the Contract Documents by a reference to the name, trade name, make or catalog number of any manufacturer or supplier, the intent is not to limit competition, but to establish a standard or quality which the Engineer has determined is necessary for the Project. The words "or equal", if not stated, are implied.

1.36 RIGHT OF ENTRY

A. The authorized representative and agents of the Owner, Engineer, and USDA Rural Development, shall be permitted to inspect and have access to all work, materials, payrolls, records of personnel, invoices of materials, and other relevant data and records.

1.37 COORDINATIONWITH RESIDENT PROJECT REPRESENTATIVE

A. The Contactor shall notify the Resident Project Representative or Engineer of the proposed work schedule prior to each day. Any work accomplished without the Resident Project Representative being present due to improper notification, shall be re-done, re-exposed, etc., to the satisfaction of the Resident Project Representative, and shall be incidental to the CONTRACT price. The Contractor shall coordinate and attend a weekly field meeting with the RPR, the Engineer, and any sub-contractor expected to be doing work in the respective week.

1.38 CONTRACTOR REPRESENTATION AT MONTHLY BOARD MEETINGS

A. The Contactor shall have a representative present only upon request at the monthly meeting of the Illinois Alluvial Regional Water Company to answer questions presented by the Board during construction and continuing through the completion of all final cleanup operations. Costs for attendance at meetings shall be incidental to the contract price.

1.39 OWNERS STOP WORK AUTHORITY

A. See General Conditions

1.40 Clean up

A. During construction, the Contactor shall clean up as the work proceeds. The premises, easements, and rights-of-way shall be kept free of accumulations of waste materials and earth, rubbish, and other debris resulting from the work, except as stated in section.

B. If in the judgment of the Owner the Contactor fails to keep the sites clean as described hereinabove, the Owner may halt the construction and/or construction payments until the sites have been cleaned up to the satisfaction of the Owner. All trees and brush removed in establishing an area for water main installation shall be removed and properly disposed of off-site unless the Contactor can make some other arrangement with the landowner. Such agreements shall be made in writing, signed by both the Contactor and the landowner, and a copy of the signed agreement shall be given to the Engineer. The brush disposal shall be continuous with the land clearing operations. The Contactor has five (5) working days from notification from the Owner and/or Engineer that the brush disposal is unsatisfactory to remedy the situation.

C. At the completion of the project, the Contactor will remove all waste materials, rubbish and debris from and about the premises as well as all tools, scaffolding and surplus materials, and will leave the site clean and ready for occupancy by the Owner. Pipe banding and other construction debris may not be left on top of or buried in the trench. The Contactor shall be liable for any damage caused to farms, yards, livestock, pets, equipment, etc. due to construction debris left in, on or around the project. The Contractor Shall restore to their original conditions those portions of the site not designated for alteration by the contract.

D. Open burning of debris will not be permitted unless specifically authorized in writing by the owner and then only following state, municipal, and other local codes, ordinances, rules and regulations.

2.00 PRODUCTS N/A

3.00 EXECUTION N/A

END OF SECTION 011100

DIVISION 01 – GENERAL REQUIREMENTS

SECTION 012200 - UNIT PRICES

1.00 GENERAL:

A. All work completed under this Contract will be measured by the Owner or his authorized representative with the assistance of the Contractor. The method of measurement shall be as described in this Section of the specifications. Payment shall be made to the Contractor, as specified in the General Conditions.

B. An itemized summary of quantities is listed in the Bid Proposal. These quantities are given only as a basis of comparing bids for award of the Contract, without guarantee that the actual quantities will agree therewith. Payment to the Contractor will be made on the basis of the actual quantities constructed and is understood that the proposed quantities may be increased or decreased without invalidating the unit bid prices; further that the Contractor hereby forfeits all rights of action to recover any anticipated profits occasioned by such increase or decrease in quantities.

C. All work to be done by the Contractor, as shown in the drawings and described in the specifications, including any and all minor details not specifically shown or described but obviously essential to the proper completion of the work, shall be considered as subsidiary to and included with the work for which prices are named in the contract documents. The Contractor shall not be entitled to any extra or additional compensation for such unless otherwise specified. Work for which there is not a pay item will be considered incidental to the Contract and no additional compensation will be allowed.

D. There will be no payment for any periodic estimate until the Owner has received the following submittals:

1. List of Subcontractors.
2. Progress and Payment Schedule.
3. A complete breakdown of the Contractor's proposal.

E. The periodic payment requests will be made on forms provided by the Owner or other approved means.

1.01 HDPE WATER MAIN

1.01.01 HDPE WATER MAIN

A. This item of work shall consist of furnishing all materials, labor, and equipment to install the HDPE pipe including excavation, bedding, installing pipe, rip rap liner, pressure testing, and all other related items. A separate payment for rock excavation will be made.

B. Measurement shall be made along the centerline of the installed pipe from end of pipe to end of pipe. Measurement shall be made to the nearest one-foot (1').

C. Payment shall be made at the contract unit price per lineal foot (LF) for the following:

Item #1 – 36" HDPE Pipe, Class 200

1.01.02 DUCTILE IRON OR HDPE FITTINGS

A. This item of work shall consist of furnishing all materials, labor, and equipment to install the ductile iron or HDPE fittings including excavation, bedding, backfilling, thrust blocks and all other related items.

B. Measurement shall be made for each fitting installed.

C. Payment shall be made at the contract price per each (EA) fitting for the following:

Item #2 – Ductile Iron Class 250 or HDPE Class 200, 36" – 90 degree bend

Item #3 – Ductile Iron Class 250 or HDPE Class 200, 36” Cap

1.01.03 FIRE HYDRANTS

A. This item of work shall consist of furnishing all materials, labor, and equipment to install Fire Hydrant including excavation, bedding, backfilling, thrust blocks, flush hydrant, gate valve, anchor coupling/s, and all other related items. This pay item includes furnishing and installation of the tee on the transmission main, as well as all associated work and fittings from the tee up to and including the hydrant assembly.

B. Measurement shall be made for each flush hydrant installed.

C. Payment shall be made at the contract price for each (EA) flush hydrant for the following:

Item #4 – Fire Hydrant with Gate Valve and Valve Box

1.01.04 HIGHWAY CROSSINGS

A. This item of work shall consist of furnishing all material, labor, and equipment required to jack and bore, furnish steel outer casing including excavating of bore and receiving pits, backfilling, installation of casing, casing spacers, end seals and all other related items.

B. Measurement shall be made along the centerline of the installed steel outer casing from end to end. Measurement shall be made to the nearest one-foot (1’).

C. Payment shall be made at the contract unit price per linear foot (LF) for the following:

Item #5 – St. Mary’s Rd – Jack and Bore 48” Steel Outer Casing including 36” HDPE Class 200 Carrier Pipe

Item #6 – Bethany Church Rd – Jack and Bore 48” Steel Outer Casing including 36” HDPE Class 200 Carrier Pipe

Item #7 – Central Rd – Jack and Bore 48” Steel Outer Casing including 36” HDPE Class 200 Carrier Pipe

Item #8 – Costello Rd – Jack and Bore 48” Steel Outer Casing including 36” HDPE Class 200 Carrier Pipe

Item #9 – State Highway 16 – Jack and Bore 48” Steel Outer Casing including 36” HDPE Class 200 Carrier Pipe

Item #10 – Otterville Rd – Jack and Bore 48” Steel Outer Casing including 36” HDPE Class 200 Carrier Pipe

1.01.05 FIBER OPTIC CONDUIT

A. This item of work shall consist of furnishing all materials, labor, and equipment to install the optical fiber conduit including excavation, bedding, installing conduit, testing, and all other related items. A separate payment for rock excavation will be made.

B. Measurement shall be made along the centerline of the installed pipe from end of pipe to end of pipe. Measurement shall be made to the nearest one-foot (1’).

C. Payment shall be made at the contract unit price per lineal foot (LF) for the following:

Item #11 – St. Mary’s Rd – Directional Bore 1-1/4” HDPE SDR 11 Fiber Optic Conduit

Item #12 – Bethany Church Rd – Directional Bore 1-1/4" HDPE SDR 11 Fiber Optic Conduit

Item #13 – Central Rd – Directional Bore 1-1/4" HDPE SDR 11 Fiber Optic Conduit

Item #14 – Costello Rd – Directional Bore 1-1/4" HDPE SDR 11 Fiber Optic Conduit

Item #15 – State Highway 16 – Directional Bore 1-1/4" HDPE SDR 11 Fiber Optic Conduit

Item #16 – Otterville Rd – Directional Bore 1-1/4" HDPE SDR 11 Fiber Optic Conduit

1.01.06 EROSION CONTROL

A. This item of work shall consist of furnishing all materials, labor, and equipment to install erosion controls shown on the Drawings.

B. Measurement shall be made Lump Sum:

C. Payment shall be made at the contract price based on % work completed for the following:

Item #17 – Erosion Control

1.01.07 SEEDING, FERTILIZING, AND MULCHING

A. This item shall consist of seed bed preparation of all disturbed areas, liming, fertilizing, sewing of seed and mulching.

B. Payment shall be made at the contract lump sum (LS) price for:

Item #18 – Seeding, Fertilizing, Mulching, Soil Testing, Ripping

1.01.08 FENCE REPAIRS

A. This item of work consists of furnishing all materials, labor, and equipment to repair / reinstall existing galvanized woven wire type and barbed wire type fence, including wood post and steel post, and all other related items.

B. Measurement shall be made along the centerline of the installed fence repair from end to end. Measurement shall be made to the nearest one-foot (1').

C. Payment shall be made at the contract unit price per linear foot (LF) for the following:

Item #19 – Fence Repair

1.01.09 DRAIN TILE REPAIR

A. This item of work consists of furnishing all materials, labor, and equipment to repair drain tiles.

B. Measurement shall be made for each drain tile repaired.

C. Payment shall be made at the contract price for each (EA) drain tile repaired for the following:

Item #20 – Drain Tile Repair

1.01.10 BACKFILL

A. This item of work consists of furnishing all materials, labor, and equipment to backfill as specified type.

B. Measurement shall be made along the centerline of the installed Pipe. Measurement shall be made to the nearest one-foot (1').

C. Payment shall be made at the contract unit price per linear foot (LF) for the following:

Item # 21 – Backfill Typical

Item # 22 – Backfill Type 5 Full Depth

1.01.11 AIR RELEASE VALVE, VAULT, AND PIPE

A. This work shall consist of furnishing all materials, labor, and equipment to install the precast reinforced concrete manhole, access hatch, ladder, combination air relief valve, including excavation, bedding, installing pipe, backfilling, pressure testing, and all other related items. This pay item includes furnishing and installation of the tee on the transmission main, as well as all associated work and fittings from the tee up to and including the combination air release valve assembly.

B. Payment shall be made at the contract unit price per each (EA) for the following:

C. Payment shall be made at the contract price for complete installation for the following:

Item #23 – 6” Air Release Valve, 72” Diameter Vault, And 6” Pipe

1.01.12 FIBER OPTIC CONDUIT

D. This item of work shall consist of furnishing all materials, labor, and equipment to install the optical fiber conduit including excavation, bedding, installing conduit, testing, and all other related items. A separate payment for rock excavation will be made.

E. Measurement shall be made along the centerline of the installed pipe from end of pipe to end of pipe. Measurement shall be made to the nearest one-foot (1’).

F. Payment shall be made at the contract unit price per lineal foot (LF) for the following:

Item #24 – 1-1/4” HDPE Pipe, SDR 11

1.01.13 FIBER OPTIC HANDHOLD

A. This item of work shall consist of furnishing all materials, labor, and equipment to install the optical fiber handhold including excavation, bedding, installing handhold, marker, testing, and all other related items. A separate payment for rock excavation will be made.

B. Measurement shall be for each handhold installed.

C. Payment shall be made at the contract unit price per each (EA) for the following:

Item #25 – 24”x36”x36” HDPE Fiber Optic Handhold

Item #26 – 12”x12”x12” HDPE Fiber Optic Handhold - Buried

1.01.14 FIBER OPTIC CABLING

A. This item of work shall consist of furnishing all materials, labor, and equipment to install the optical fiber cable inside a conduit including excavation, bedding, installing cable, splicing, testing, and all other related items. A separate payment for rock excavation will be made.

B. Measurement shall be made along the centerline of the installed cable from end of pipe to end of cable. Measurement shall be made to the nearest one-foot (1’).

C. Payment shall be made at the contract unit price per lineal foot (LF) for the following:

Item #27 – 24 Strand Single Mode Fiber with Armored Shield

1.01.15 EXPLORATORY DIG (UTILITIES)

A. This Item of work shall consist of furnishing all materials, labor, and equipment to verify locations of underground utilities.

B. Measurement shall be for each utility crossing location and will be counted only 1 time per crossing. If backfilled and must be found again, no additional/repeat payment is allowed. Longitudinal utility location verification shall be counted as 1 Each no matter the length of adjacency.

C. Payment shall be made for each utility as follows:

Item #28 – Exploratory Dig (Utilities)

1.01.16 ROCK EXCAVATION

A. This Item of work shall consist of furnishing all materials, labor, and equipment to remove and dispose of rock material encountered that cannot be removed by conventional methods.

B. Measurement shall be made per cubic yard of rock removed in place. It shall be computed from the field measurement of trench width, depth, and length.

C. Payment shall be made at the contract price per cubic yard (CU YD) for the following:

Item #29 – Rock Excavation

1.01.17 OTHER ITEMS

A. Many items required to complete this project do not have separate bid items. Items such as reinforcing steel, concrete thrust blocking, freight, handling, fittings, bends, adapters, hauling, borrow material, permits, excess earth, granular bedding, flushing, testing, etc., are shown on the drawings or specified. These items are to be completed, however, no direct payment shall be made as the cost should be included in other bid items.

2.00 PRODUCTS

N/A

3.00 EXECUTION

N/A

END OF SECTION 012200

Intentionally Blank

DIVISION 01 – GENERAL REQUIREMENTS

SECTION 014126 – PERMIT REQUIREMENT (NPDES AND SWPPP)

1.00 GENERAL:

1.01 SCOPE OF WORK

A. The procedures contained herein specify the requirements that the Contractor and all major subcontractors involved in land disturbing activities must follow to ensure that the Storm Water Pollution Prevention Plan (SWPPP) prepared for this project is adhered to.

B. The Contractor shall obtain an NPDES General Permit for Construction Activities. The Contractor is responsible for all aspects of the permit process from the Notice of Intent to Construct, through Notice of Termination, including the weekly and rainfall inspections as necessary per the permit and according to these specifications.

1.02 BACKGROUND AND PURPOSE

A. As required by a Storm Water General Permit, a Storm Water Pollution Prevention Plan (SWPPP) has been prepared for this project. The SWPPP is intended to control water-borne and liquid pollutant discharges by some combination of interception, filtration and containment. The SWPPP requires that all major grading activities and associated pollution prevention measures to be documented inspected and maintained throughout the construction phase of the project until final stabilization is achieved.

1.03 CONTRACTOR REVIEW AND ACKNOWLEDGEMENT OF SWPPP: RESPONSIBLE SITE INSPECTOR

A. The Contractor and any subcontractor involved in earthwork shall:

1. Review the Stormwater Pollution Prevention Plan.
2. Sign the Contractor's Acknowledgement Form.
3. Indicate, in the SWPPP, the names of all key subcontractors involved in earthwork/land disturbing activities.
4. Ensure that all key site personnel involved in earthwork operations understand the requirements of the SWPPP.
5. Return a copy of the signed form to the Owner's representative prior to construction commencement.
6. Maintain a copy of the Registration Statement, Stormwater General Permit and Stormwater Pollution Prevention Plan on site at all times.
7. Provide a Responsible Site Inspector for compliance with the SWPPP who shall: 1) be familiar with the site and the nature of the major construction activities, 2) be qualified to evaluate both overall system performance and individual component performance, and 3) meet any specific requirements for training imposed by the Owner. The Contractor's Responsible Site Inspector is authorized to recommend and implement modifications to the SWPPP as required to ensure the effectiveness of pollution prevention measures, provided, however that all such changes shall be approved by the Owner before implementation.

1.04 UNAUTHORIZED DISCHARGES

A. The Contractor will ensure that no discharges other than those from stormwater leave the site.

B. The Contractor will notify the Owner of any discharges of other than stormwater in accordance with the procedures contained in the General Permit. Such discharges shall include but not be limited to oils, greases and other petroleum products, hazardous substances, or hazardous substances of any type.

2.00 PRODUCTS:

A. N/A

3.00 EXECUTION:

3.01 REQUIREMENT TO MONITOR

A. Required Recording. A record of the following dates shall be maintained in the SWPPP:

1. Commencement and Completion of all Major Grading Activities. The commencement date for grading activities and the dates of all major grading activities shall be recorded by the Contractor. A copy of the approved erosion and sediment control plan shall be annotated at the beginning and end of each major grading activity. Addenda, sketches, new section and/or revised drawings may be added to the approved E&S Plan.
2. Inspections. The dates of all inspections and corrective actions shall be noted in the SWPPP.
3. Temporary Cessation of Activities. When construction activities temporarily or permanently cease on a portion of the site the dates shall be noted.
4. Stabilization. When permanent or temporary stabilization of exposed earth areas occur the dates shall be noted.

B. Inspections. Between the time the SWPPP is implemented and final stabilization of the site occurs, the following inspections shall be conducted by the general Contractor's designated representative:

1. At least once every seven (7) days.
2. Within 24 hours of a rainfall event of (0.5") one-half inch or greater as measured by the nearest national Weather Service measuring station.

C. Inspection Items. The following items shall be inspected during the events noted above:

1. Locations where vehicles enter, and exit must be inspected for evidence of off-site sediment tracking.
2. Sediment barriers must be inspected for effectiveness.
3. All disturbed areas and areas used for storing materials (including excess earth) that are exposed to rainfall for evidence of, or potential for, pollutants entering the drainage system. Seeded, sodded or otherwise newly vegetated areas will be inspected to confirm that a healthy stand of vegetation has been achieved for erosion control purposes.
4. All discharge points to determine whether erosion control measures are effective in preventing significant impacts to receiving waters.

3.02 SYSTEM MAINTENANCE AND CORRECTIVE ACTIONS

A. System maintenance and corrective actions for all deficiencies noted must be undertaken within 48 hours of completion of the required inspections. Any modifications necessary to increase the effectiveness of the SWPPP shall be made within seven (7) days of discovery of the need for increased effectiveness provided such modifications shall be approved by the Owner.

3.03 RECORD MAINTENANCE AND AVAILABILITY

A. Availability of SWPPP. The Contractor shall maintain the SWPPP on the construction site at **ALL** times. The SWPPP shall be made available to any representatives of the Illinois Environmental Protection Agency or any representative of the Owner including Owner's Resident Project Representative, upon request.

B. Notification of Final Stabilization. Upon completion of the final stabilization of the construction site, Contractor shall file a Notice of Termination for the project, at the completion of the project.

C. Disposition of Completed SWPPP. The completed SWPPP shall be returned to the Owner upon completion of the project.

D. Verification of Compliance. The Contractor shall submit inspection records from the SWPPP for the invoice period with each invoice for the project submitted to the Owner. Owner reserves the right to withhold payment if records including SWPPP inspections are not acceptable or not provided with each invoice.

3.04 METHOD OF MEASUREMENT

A. Full compliance of the SWPPP

3.05 BASIS OF PAYMENT

A. All costs for SWPPP coordination, NPDES General Permit for Construction Activities acquisition, installation, and maintenance, shall be included in the Contractor's bid price for "Erosion Control".

END OF SECTION 014126

Intentionally Blank

DIVISION 01 - GENERAL REQUIREMENTS

SECTION 014500 - QUALITY CONTROL

1.00 GENERAL

1.01 SECTION INCLUDES

A. Contractor's responsibility for quality assurance, control of the installation of improvements, field sampling, inspection services, manufacturer's field services and reports.

1.02 SUMMARY

A. All materials and each part of the work shall be subject to inspection by the Owner's Resident Project Representative.

B. The Owner's Resident Project Representative shall be allowed access to all parts of the work and shall be furnished with information and assistance, by the Contractor, as required to make a complete and detailed inspection.

1.03 QUALITY ASSURANCE CONTROL OF INSTALLATION

A. It is the Contractors responsibility to monitor quality control over suppliers, manufacturers, products, services, site conditions, and workmanship, to produce work of quality equal to or exceeding that specified.

B. The Contractor shall comply fully with manufacturer's instructions, including each step in sequence.

C. If the manufacturer's instructions are in conflict with the contract documents, the Contractor shall request clarification from the Owner's Resident Project Representative before proceeding.

D. The contractor's work shall comply with specified standards. The standards define the minimum quality for the work.

E. Qualified persons shall perform all work of specified quality.

1.04 FIELD SAMPLES

A. The Contractor shall install field samples at the site, when specified, for review prior to installation of the item.

B. Samples accepted by the Owner's Resident Project Representative shall represent the quality level for the work.

C. Field samples shall be removed and the area cleared after the Owner's Resident Project Representatives has accepted the field samples, unless specifically permitted to remain.

1.05 INSPECTION AND TESTING SERVICES

A. Contractor shall give Owner's Resident Project Representative a 72-hour notice of readiness for all required inspections, tests, or approvals, including startup or system activation of equipment.

1. Contractor shall notify the Owner's Resident Project Representative by 3:00 p.m. of the preceding day if he will not be ready for a previously scheduled inspection. The Contractor may be responsible for the cost of additional inspections if this notification is not made.

2. The Contractor shall provide the Owner's Resident Project Representative one-week notice for pre-final and/or final inspection.

B. Inspection fees will be the responsibility of the Owner unless otherwise stated in the Contract Documents. There shall be no direct charge to the Owner for materials taken as samples, either for field or laboratory tests.

C. Testing will conform to the current standard specified to assure quality. The Owner's Representative will determine frequency of testing.

D. This section shall not relieve the Contractor from his responsibility to provide certifications and substantiating test reports, from a supplier or fabricator.

E. If the Contract Documents include the Contractor providing reports or testing, the Contractor shall retain the services of an independent testing firm. Test results or reports will be submitted to the Owner's Resident Project Representative, indicating observation and results of tests and compliance or noncompliance with Contract Documents.

1. If a test is not in conformance, the same independent firm shall perform re-testing.

1.06 MANUFACTURERS' FIELD SERVICES AND REPORTS

A. When required by specifications or drawings, product suppliers or manufacturers shall provide qualified staff or personnel for field services. Services may include providing instructions, observing site conditions, conditions of surfaces and installation, quality of workmanship, start-up of equipment, testing, adjusting, and balancing of equipment.

B. The Contractor shall report to the Owner's Resident Project Representative observations, site decisions, or instructions from the manufacturer's personnel that is supplemental or contrary to manufacturer's written instructions.

C. The Contractor shall review, approve, and submit the manufacturer's report within 14 days of observation to Owner's Representative for his review.

2.00 PRODUCTS NA

3.00 EXECUTION NA

END OF SECTION 014500

DIVISION 01 – GENERAL REQUIREMENTS

SECTION 015526 -TRAFFIC CONTROL

1.00 GENERAL

1.01 DESCRIPTION OF WORK

A. This work shall consist of furnishing and installing traffic control devices as required to protect the public and to protect the work throughout the duration of the project as directed by the engineer and/or State and County Highway permit requirements.

2.00 PRODUCTS

2.01 MATERIALS DESCRIPTION

A. The materials used for traffic control shall include signage, cones, barricades, flashing lights, and other traffic control devices as directed by the engineer and/or State and County Highway permit requirements.

3.00 EXECUTION

3.01 GENERAL

A. The Contractor shall install, maintain, clean and relocate the traffic control devices as the work progresses. Any device that becomes unreadable or inoperable shall be repaired or replaced with 24 hours of notification by the Owner or Engineer.

B. Signs and barricades shall be covered, removed or relocated as their necessity ceases to exist. The temporary traffic control devices shall be removed at the end of the project.

C. The Contractor shall add to the number and type of traffic control devices as required to adequately protect the public and the work as he considers necessary or as directed by the Engineer and/or State and County Highway permit requirements.

D. The Contractor shall coordinate the stages of construction and traffic control plan with the Engineer. The contractor's traffic control plan shall protect the public and work during daytime and nighttime conditions.

E. The Contractor shall give written notice to the Engineer if any accident, pedestrian or vehicular, has occurred on the project. The Contractor shall provide any law enforcement reports of accidents on the project to the Engineer.

F. The Contractor shall keep lane closures to a minimum and closures shall be subject to the Engineers approval.

G. When any section of road is closed to traffic, the Contractor shall provide, erect, and maintain barricades, red flags, signs and lights at each end of the closed section and at all intersecting roads, in accordance with the Illinois Manual of Uniform Traffic Control Devices.

H. If during the progress of the work it is necessary to provide access to private property along the road, the Contractor shall provide, erect, and maintain, within the closed portion of the road, such barricades, signs, flags, and lights as may be necessary to protect the work and to safeguard local traffic. No open or unfilled trenches will be left unattended or overnight.

I. The cost of furnishing and maintaining barricades, warning signs, red flags, and lights as required herein shall be incidental to the contract and no extra compensation will be allowed.

J. The Contractor shall notify all appropriate first responders and school districts/bus garages of all road closures.

END OF SECTION 015526

DIVISION 01 – GENERAL REQUIREMENTS

SECTION 017123 – FIELD ENGINEERING AND SURVEYING

1.00 GENERAL

1.01 RELATED DOCUMENTS

A. Drawings and general provisions of the Contract, including General and Special Conditions and Division 01 Specification Sections, apply to this Section.

B. The cost of all work required by this Section shall be included in the prices bid in the schedule for other items of work with exception of surveying as described in this section to be performed by the owner, through the engineer. Such surveying by the owner does not relieve the contractor of responsibility of compliance with the contract documents and quality control requirements.

C. Should survey control points or other stakes, hubs, markings or other monuments established by Engineer be damaged or destroyed, the contractor shall pay the engineer to re-establish said survey control points or other stakes, hubs, or markings.

1.02 SUMMARY

A. Contractor shall provide surveying services for horizontal layout and vertical grades for the pipelines, appurtenances, structures and equipment. The Contractor will perform all necessary surveys other than those specifically mentioned herein as being performed by the Owner through the Engineer. Contractor shall provide record surveys and as-built measurements to document the location of the buildings, pipelines and appurtenant structures and equipment, as constructed, for Owner's record purposes and for future documentation for One-Call utility locates.

1.03 SUBMITTALS

A. Control Surveys: Contractor shall submit copies of any point files or field book notes based on its check of Engineer provided survey control points prior to construction. The Contractor shall also provide information and survey results for the second independent survey of the control points.

B. Record Surveys: Contractor shall submit copies of any point files or field book notes with each Pay Application, as necessary to establish a horizontal and vertical grade of the installed pipeline. Contractor is responsible to perform record surveys.

1.04 QUALITY ASSURANCE

A. The Contractor shall provide competent engineering and surveying personal to execute the work in accordance with the Contract Documents. The Contractor shall verify the figures shown on the survey and approved drawings before undertaking any construction work and shall be responsible for the accuracy of the finished work. Specifically, before beginning construction, the Contractor's field survey crew will be provided calculations and surveys notes prepared by Engineer to establish the survey control points. Contractor shall verify all survey control points prior to construction. Should Contractor not be able to verify said survey control points, Contractor shall work with Engineer to resolve any discrepancies to the satisfaction of both parties.

B. The Contractor shall provide Quality Control/Quality Assurance by verification of all control points with a second independent survey.

1.05 PROJECT CONDITIONS

A. The Owner, through the Engineer, has established survey control points for the project. The Engineer shall provide centerline of water main or offset stakes (at approximately 100' increments and changes in horizontal direction) to enable the Contractor to proceed with the Work. If the Contractor finds that any

previously established reference points or stakes have been destroyed or displaced, he shall promptly notify the Engineer. No guarantee is given or implied that all utilities have been located. Reasonable care was taken during design to identify utilities encountered and to tie them into the survey. Additional utility location data was visually located in the field or taken from the utility drawings and denoted as approximate location on the plan and profile drawings. In most cases, the depth of burial is unknown. Communication between the Contractor and the utility owners is required to provide for the safety of personnel and facilities.

1.07 COORDINATION

A. Coordinate Work on this section with interfacing and adjoining Work for proper sequencing of each installation.

2.00 PRODUCTS

A. NOT APPLICABLE

3.00 EXECUTION

3.01 GENERAL

A. The Owner, through the Engineer, shall provide right-of-way, temporary easements, permanent easements and establish survey control points. From the information provided by the Owner, unless otherwise specified in the Contract Documents, the Contractor shall develop and make all detailed surveys needed for construction such as excavations, building layout, slope stakes, batter boards, stakes for pipe locations and other working points, lines, elevations and cut sheets.

B. The Contractor shall protect and preserve the established survey control points and monuments and shall make no changes in locations without approval of the Engineer.

C. Should the Contractor's surveys discover apparent errors in the surveys performed by the Engineer, the Contractor shall notify the Engineer within twenty-four hours as to the nature of the error. The Engineer shall begin check surveys within twenty-four hours of such notification (unless on a Friday or Saturday) and provide the Contractor with the results. Should the results disclose the Contractor's surveys to be in error, the Contractor shall reimburse the Owner for the costs of the check surveys.

D. The Engineer reserves the right to check the Contractor's surveys at any time. Should errors be discovered the Contractor shall correct the surveys in a timely fashion at no additional cost to the Owner.

E. All survey control traverse monuments, property corner monuments, and land corner monuments that will be disturbed by construction activity shall be referenced prior to any construction activity and replaced following all construction with a like or superior monument. Replacement shall be in accordance with State law and current regulations. Particular attention shall be given to preserving land corners buried in county or township roads.

F. The Contractor shall carefully preserve survey control points and, in the case of willful or careless destruction, shall be charged with the resulting expense and shall be responsible for any mistake that may be caused by their unnecessary loss or disturbance.

3.02 SURVEYING MATERIALS AND EQUIPMENT

A. The Contractor shall provide materials and equipment required for surveying work required to transfer line and grade from the control points and stakes as set by the Engineer to locate the principal component parts of the Work. Provide accurate instruments. Instruments shall be inspected for accurate operation at least every two weeks of use. Replace, repair, or adjust defective instruments to satisfaction of Engineer.

B. The Contractor must use the correct method and equipment to obtain the accuracy required in section 3.04 below.

3.03 WORK LAYOUT SURVEYS

A. The Contractor shall establish lines and grades necessary to properly lay out work from the survey control points established by the Engineer.

B. The Contractor shall establish, place, and replace as required, such additional stakes, markers, and other controls necessary for control, intermediate checks, and guidance of construction operations to properly lay out and execute the work.

3.04 RECORD SURVEYS

A. The Contractor shall perform surveys and computations necessary to establish a horizontal (tolerance of 0.2') and vertical grade (tolerance of 0.2') of the installed pipeline and appurtenances during each progress payment period.

B. The Contractor shall take survey shots every 20 feet at the top of pipe along the installed pipeline. The distance between shots can be increased to 100 feet only if the pipeline is laid at a consistent slope and alignment. These shots shall be submitted to the Engineer daily including x, y, z and tied into the Engineer's set control.

END OF SECTION 311200

Intentionally Blank

DIVISION 3 - CONCRETE

SECTION 033000 - PORTLAND CEMENT CONCRETE

1.00 GENERAL:

A. Contract B:

1. The Owner, as referred to in these specifications, is the Illinois Alluvial Regional Water Company, 14500 State Highway 16, Fieldon, Illinois 62031.

1.01 DESCRIPTION:

A. This section of the specifications covers the materials, methods of construction, and requirements necessary to complete the Portland Cement Concrete work as indicated on the Drawings or as specified herein.

1.02 TESTING AGENCY:

A. Observation and testing will be performed by an independent firm approved by the Owner and paid for by the Contractor.

B. Mix Design Submittals: Prior to beginning the work and within 14 days following the notice to proceed, the Contractor shall submit to the Owner, for review, previous independent laboratory generated data detailing performance (measures of performance as defined below) of the proposed mix design. Contractor shall also provide certification that materials used and their proportions are to be essentially unchanged from the mixture for which the data was generated. If independent laboratory data is not available, the proposed mix design shall be checked by an independent laboratory acceptable to the Owner. All costs related to such testing shall be paid for by the Contractor. Since laboratory trial batches require 35 calendar days to complete, the Contractor may consider testing more than one mix design for each class of concrete. Include the following information for each mix design:

1. Water/cement materials ratio

2. Slump as per ASTM C 143

3. Air content as per ASTM C 231 (pressure method), or ASTM C 173 (volumetric method)

4. Unit weight of concrete as per ASTM C 138

5. Compressive strength at 3, 7, and 28 days per ASTM C 39

6. Shrinkage (length change) as measured in accordance with Section 1.02 - Testing Agency, Paragraph C. - Shrinking Testing Procedure

C. Shrinkage Testing Procedure: Testing and reporting shall conform to the latest ASTM C 157-93 with the following modifications:

1. Wet cure specimens for a period of 7 days (including the period of time the specimens are in the mold). Wet cure may be achieved either through storage in a moist cabinet or room in accordance with ASTM C 511, or through storage in lime saturated water.

2. Slump of concrete for testing shall match job requirements and need not be limited to restrictions as stated in ASTM C 157 Section 7.4.

3. Report results in accordance with ASTM C 157 at 0, 7, 14, and 28 days of drying.

D. Test of cement and aggregates shall be performed to ensure conformance with specification requirements. Manufacturer's certification that cement materials meet specification requirements and results of

manufacturer's own material tests will be acceptable in lieu of tests by observation and testing firm. Aggregate testing shall be performed by independent observation and testing firm, for compliance with ASTM C33, including limits for deleterious substances, grading and physical property requirements.

E. Field quality control tests are specified in Part 3 of this section.

1.03 REFERENCE STANDARDS:

A. ACI 301 - Specification for Structural Concrete for Buildings.

B. ACI 340 - Recommended Practice for Measuring, Mixing, Transporting and Placing Concrete.

C. ACI 305 - Recommended Practice for Hot Weather Concreting.

D. ACI 306 - Recommended Practice for Cold Weather Concreting.

E. ACI 318 - Building Code Requirements for Reinforced Concrete.

F. ASTM C33 - Concrete Aggregates.

G. ASTM C39 - Compressive Strength of Cylindrical Concrete Specimens.

H. ASTM C94 - Ready-Mixed Concrete.

I. ASTM C138 - Unit Weight, Yield, and Air Content (Gravimetric) of Concrete.

J. ASTM C143 - Slump of Portland Cement Concrete.

K. ASTM C150 - Portland Cement.

L. ASTM C157-93 - Length Change of Hardened Hydraulic-Cement Mortar and Concrete.

M. ASTM C171 -Sheet Materials for Curing Concrete.

N. ASTM C173 - Air Content of Freshly Mixed Concrete (Volumetric Method).

O. ASTM C231 - Air Content of Freshly Mixed Concrete (Pressure Method).

P. ASTM C260 - Air Entraining Admixtures for Concrete.

Q. ASTM C309 - Liquid Membrane - Forming Compounds for Curing Concrete.

R. ASTM C494 - Chemical Admixtures for Concrete.

1.04 SHOP DRAWINGS:

A. Shop drawings shall be submitted in accordance with the General Conditions and General Requirements. The Contractor shall furnish certified mill tests for all bars and shall submit duplicate copies of the bar drawings and schedules for preliminary checking and copies for final approval as specified in the General Conditions and General Requirements. Bending details shall conform to the standards of the Reinforcing Steel Institute.

2.00 <u>PRODUCTS</u>

2.01 PORTLAND CEMENT:

A. The Portland Cement shall conform to ASTM Specifications C-150, Type I, or ASTM Specification C-175, Type IA air entrained cement, if approved by the Engineer.

B. The Portland cement used under this contract shall be a standard brand of Portland cement which has been in practical use in public works and which has heretofore given satisfactory results. The cement when delivered to the site or at the location where the concrete is to be mixed, shall be stored so as to protect it from damage; and no damaged, partially set, or lumpy cement shall be used in the work and shall immediately be removed from the premises. The cement shall be manufactured by only one mill and used throughout the entire project. Brands of cement shall not be mixed.

2.02 FINE AGGREGATE:

A. The fine aggregate shall consist of clean, natural sand of hard, strong, durable material, free from all foreign organic material or other injurious impurities conforming to ASTM C-33. The sand shall be graded to meet the following sieve analysis using the U.S. Standard sieve series, with all percentages determined by weight.

SIEVE SIZE	PERCENT PASSING
3/8 Inch	100
No. 4	95-100
No. 16	60-75
No. 50	10-30
No. 100	0-5

B. The fineness modulus of the fine aggregate shall not be less than 2.50 nor more than 3.00.

2.03 COARSE AGGREGATE:

A. The coarse aggregate shall be clean washed and screened gravel or crushed limestone, having a specific gravity of not less than 2.56. The gravel shall be free from dust, loam, clay, alkali, or organic impurities, and free from thin porous, elongated, or laminated particles. A sample of the gravel when subjected to the sodium sulfate accelerated soundness test for freezing and thawing shall have a weighted average loss of not more than 15%. Crushed limestone aggregate shall consist of uncoated particles of sound, durable rock of uniform quality without an excess of flat, elongated, or laminated pieces.

B. The gravel or crushed limestone shall be graded to meet the following sieve analysis using the U.S. Standard Sieve Series, with all percentages determined by weight.

SIEVE SIZE	PERCENTAGE PASSING
1 1/2 inch	100
1 inch	95-100
3/4 inch	70-85
3/8 inch	20-40
No. 4	0-5

C. The use of frozen aggregates will not be permitted. When the temperature of the air permits concreting to be carried on, the aggregates must be thawed out, thoroughly removing all frost before inclusion in the concrete mixture.

2.04 WATER:

A. The water in mixing concrete shall be clean and free from injurious amounts of oil, acids, alkalis, salts, or organic matter. The water used shall be of potable quality.

2.05 ADMIXTURES:

A. Should the Contractor desire to incorporate in the concrete mix an admixture to improve the workability of the concrete, the approval must be obtained from the Owner. However, no additional payment will be made for the use of the admixture; the use of such admixture will be made at the Contractor's expense.

1. Air Entrainment: ASTM C260.

2. Chemical: ASTM C494, Type A - water reducing. Type B - retarding. Type C - accelerating. Type D - water reducing and retarding. Type E - water reducing and accelerating. Type F - high range water reducer. Type G - high range water reducing and retarding.

3. Shrinkage Reducing Admixture (SRA): Provide Eclipse™ Shrinkage Reducing Admixture as supplied by Grace Construction Products (or approved equal) at a rate of 1.5 gallons per cubic yard (liters per cubic meter).

4. The use of calcium chloride in concrete is strictly prohibited.

2.06 GROUT:

A. The grout shall be placed 2" deep in bottom of wall before any concrete is placed.

1. Mix in proportions of one part cement to one and one-half parts sand by weight keeping water to a minimum.

2.07 REINFORCING STEEL:

A. The reinforcing steel shall be rolled from new Billet-Steel Bars for Concrete Reinforcement ASTM-615 with deformations conforming to ASTM-305 and 60,000 psi minimum yield strength, ASTM A-432.

B. The reinforcing, when delivered, shall be protected from the weather. The reinforcing shall not be oiled or painted. Reinforcing with slight rust which can easily be removed with a wire brush may be used after removal of rust. All reinforcing steel unacceptable to the Owner will be immediately removed from the job site.

C. Welded wire fabric shall conform to ASTM A-185 and shall be the size and gauge shown on the Drawings.

D. All bent bars shall be accurately cold bent to conform to the approved shop drawings.

E. All bars shall be tagged and bundled. Imperishable marking tags are to be used.

F. Metal accessories, including spacers, chairs, ties, and other devices necessary for properly assembling, placing and spacing and supporting all reinforcing in place, shall be provided.

G. Reinforcing steel shall be carefully handled so that it will not become bent or otherwise damaged, shall be stored on racks, skids or other supports which will keep the steel from contact with the ground.

2.08 CONCRETE ADHESIVE:

A. Where indicated on the Drawings shall be, SIKA Corporation, SIKADUR 32, HI-MOD LPL, or equal adhesive shall be used.

2.09 EXPOSED WALL COATINGS:

A. As specified herein or as requested by the Owner, a cement-base, aggregate type, heavy duty, coating shall be applied to exposed concrete wall surfaces. The material shall be thoroseal as manufactured by Thoro System Products or an approved equal.

2.10 LIQUID MEMBRANE CURING COMPOUND:

A. Liquid Membrane Curing Compound shall comply with ASTM C-309, Type 1, and AASHTO M-148.

2.11 VAPOR BARRIER COMPOUND:

A. Polyethylene Film: 4 mil thick, opaque ASTM C 171.

3.00 EXECUTION:

3.01 CONCRETE:

A. Mix concrete in accordance with ASTM C94.

B. Provide concrete of the following strength:

1. Compressive strength (28 day): 3500 psi

2. Entrained Air Content: As indicated in ACI 301, Table 3.4.1 or 7.5% +/- 1.5% with the Shrinkage Reducing Admixture.

3. Water Cement Ratio: Maximum 0.45.

4. Slump: 1 inch minimum, 3 inch maximum for footings and substructure walls; 4 inch maximum for slabs, beams, reinforced walls and columns. Loss of slump in pumping shall not exceed 1 1/2 inch.

C. Select proportions for normal weight concrete in accordance with ACI 301, Chapter 3, Section 3.9 or 3.10.

D. Admixtures shall be included with the mix design submittal and reviewed by the Owner.

E. Use accelerating admixtures for use only in cold weather. Concrete techniques and placement requirements shall be in place under the application and reviewed by the Owner. Calcium chloride or admixtures containing chlorides may not be used in the concrete.

F. Use retaining admixtures only in hot weather and shall follow hot weather concrete techniques to lower concrete temperature to an acceptable level. These techniques shall be reviewed by the Owner.

G. Use air entrained concrete for all concrete exposed to the exterior.

3.02 MIXING:

A. Ready Mix (Central Plant) concrete shall be used for all work on this project, provided the concrete conforms to the proportions and strengths as specified herein. Two speed mixer trucks shall be utilized for transit to the job site.

B. The concrete must be in place within one hour after water is added to the mix. ASTM Specifications for Ready Mix Concrete C-94 shall apply. The Central Mixing Plant shall be designated in writing to the Owner for his approval one week prior to the usage of concrete on the job site.

3.03 COLD AND HOT WEATHER REQUIREMENTS:

A. Cold weather concreting shall not be continued when the air temperature is below 45 degrees F, unless the following conditions are maintained:

1. Mixing water shall be heated to a maximum of 150 degrees F.

2. Aggregates shall be heated until free of all ice and frost.

3. The concrete temperature after mixing shall be between 50 degrees F and 70 degrees F if the air temperature is 25 degrees F to 45 degrees F.

4. After the concrete is placed, it shall be covered, protected and heated so as to maintain a minimum of 70 degrees F air temperature for the first 24 hours and 50 degrees F for the next six days.

5. Moist conditions shall be maintained during the heating period.

6. All covering, heating equipment, etc., shall be on hand and approved by the Owner before any concrete is placed.

B. No concrete shall be placed on iced or frozen subgrade or when the air temperature is below 25 degrees F.

C. Hot weather concrete work will not be permitted on exposed surfaces while air temperature exceeds 100 degrees F. Cover and protect and cool as necessary to maintain the internal temperature of the concrete below 100 degrees F. Concrete delivered to the job site while in the Ready Mix truck shall maintain a temperature less than 85 degrees F.

3.04 CURING:

A. Curing shall be accomplished by preventing loss of moisture, rapid temperature change, and mechanical injury or injury from rain or flowing water for a period of not less than 5 days when normal Portland Cement has been used. Curing shall be started as soon as free water has disappeared from the surface of the concrete after placing and finishing. Curing shall be accomplished by using any of the following methods or combination thereof, as approved by the Owner.

B. Unformed surfaces shall be covered with approved fabric, mats, burlap, or with sand, and shall be kept continually wet, or be covered with waterproof paper or polyethylene sheeting, or be coated with liquid membrane. Where formed surfaces are cured in forms, the forms shall be kept continually wet or the top forms may be loosened, as directed or approved by the Owner and water allowed to run down between the forms and concrete. If forms are removed before the end of the curing period, curing shall be continued as on unformed surfaces. Burlap shall be used only on surfaces which will be exposed in the finish work and shall be in two layers. Water shall be applied in a manner which will not damage the concrete, and shall be free from impurities which may damage or discolor the concrete.

C. Liquid membrane-forming curing compounds, when approved by the Owner, shall be applied by power spraying equipment using a spray nozzle equipped with a wind guard. The compound shall be applied in a two-coat, continuous operation at a coverage of not more than 200 square feet per gallon for each coat or as recommended by the manufacturer. The compound shall form a uniform, continuous, adherent film that will not check, crack or peel and shall be free from pinholes or other imperfections. Surfaces subject to heavy rainfall within 3 hours after application of compound shall be re-sprayed at the rate specified above. Surfaces coated with curing compound shall be kept free of foot and vehicle traffic or other abrasions during the curing period. Membrane curing compound shall not be used on surfaces that are to receive concrete, bituminous membrane waterproofing, resilient floor covering, nor surfaces that are to be painted.

D. Waterproof paper or polyethylene sheeting shall be placed to completely cover the concrete with enough overlap for secure anchorage around the edges. Adjoining sheets shall be lapped 6 inches and appropriately weighted, or sealed with tape or other approved means. Edge and lap anchorage shall be sufficient to prevent billowing or displacement by the wind. The sheeting material shall be no less than 4 mils thick and black in color for cold weather use and white or clear for hot weather.

E. To facilitate rubbing of concrete, or for other reasons, forms may be removed from vertical surfaces of thick sections 48 hours after concreting, with the approval of the Owner. Extreme caution should be exercised to prevent injury of concrete surfaces and edges during form removal. Surfaces revealed by form removal before the 5 day curing period shall have one of the other curing methods applied as soon as possible after form stripping.

3.05 FORMS:

A. The forms utilized for concrete shall be watertight, true to line and elevation, and rigidly braced so as not to be disturbed during the placement of concrete. If the forms develop any defects such as bulging, sagging, or showing signs of lateral displacement after the concrete has been placed, the concrete shall be removed and replaced correctly at the Contractor's expense. The inside of all forms shall be coated with a light, clear, paraffin based oil, which will not discolor or otherwise mar the concrete surface. The oil will be applied prior to erection of the forms; any reinforcing steel contaminated with form oil will be removed and replaced.

B. Forms for concrete surfaces which will be visible in the finished structure shall be lined with wooden sheets such as Masonite or smooth plywood. The joints of this lining shall be neat and close. Lining damaged with hammer imprints shall not be used.

C. Removal of forms shall be restricted to the following minimum time requirements:

1. Floor slab (structural): 120 hours
2. Floor slab on grade: 48 hours
3. Walls: 48 hours
4. Beam bottom forms 7 days or develop at least 3,000 psi

D. The minimum times, shown above, shall be utilized unless specific instruction to increase this time period has been requested by the Owner.

E. Form ties shall be of the removable end, permanently embedded body type and shall have sufficient strength, stiffness, and rigidity to support and maintain the form in proper position and alignment without the use of auxiliary spreaders. Ties shall also have water stop collars.

F. Chamfer strips shall be placed in forms to bevel all salient edges and corners and the top edges of walls. Unless otherwise noted, bevels shall be 3/4 inch wide and shall be cast in place.

3.06 PLACING REINFORCEMENT:

A. Reinforcement shall be accurately formed and positioned, and shall be maintained in proper position while the concrete is being placed and compacted. Unless otherwise shown on the Drawings, the details of fabrication shall conform to ACI 315 and 318. In case of conflict, ACI 318 shall govern.

B. Approval by the Owner's Resident Project Representative is required at the completion of placing reinforcing steel prior to the placing of any concrete.

3.07 PLACING OF CONCRETE:

A. The placing of concrete shall be accomplished by placing in one continuous operation between the limits of the work or between properly constructed and permissible construction joints.

B. The Contractor shall place no concrete until after observation, by the Owner's Resident Project Representative of forms, reinforcing, and embedded items. Place no concrete over water covered, muddy, frozen soil or dry soil or sub-base. Dry sub-base shall be sprinkled with water prior to the placement of concrete.

C. In preparation for the placing of concrete, all chips, and other construction debris and extraneous matter, shall be removed from the interior of the forms. Struts, stays and braces, serving temporarily to hold the forms in correct shape and alignment pending the placing of concrete in their locations, shall be removed when the concrete placing has reached an elevation rendering their services unnecessary. These temporary members shall be entirely removed from the forms and not buried in the concrete. Concrete shall be placed so as to avoid segregation of the materials and displacement of the reinforcement. The use of long troughs, chutes, and pipes for conveying concrete from the mixer to the forms shall be permitted only on written authorization from the Engineer. In case an inferior quality of concrete is produced by the use of such conveyors, the Engineer may order discontinuance of their use and the substitution of a satisfactory method of placing.

D. Concrete shall be conveyed to place of deposit by methods which prevent separation of materials. Hoppers, chutes, tubes, or pumping equipment shall be sized to ensure a practically continuous flow of concrete to point of delivery without separation of materials.

E. The maximum free fall of concrete shall be less than six feet (6').

F. Concrete shall be placed in a continuous operation until the panel or section is completed. Concrete for walls, piers, and columns shall be placed in layers not to exceed eighteen inches (18") in depth. Layers shall be incorporated together by vibrating a minimum of three inches (3") into the previously placed layer.

G. During the placing of the concrete, it shall be compacted by mechanical vibration obtained by mechanical power operating within the mass of the concrete, supplemented by spading tools. Vibrators shall be of a type and design approved by the Engineer.

H. The intensity of vibration shall be such as to visibly affect a mass of concrete of 1 inch slump over a radius of at least 18 inches. The Contractor shall provide a sufficient number of vibrators to properly compact each batch immediately after it is placed in the forms. Vibration shall be manipulated so as to thoroughly work the concrete around the reinforcement and embedded fixtures and in the corners and angles of the forms. Vibration shall be applied at the point of deposit and in the areas of the freshly deposited concrete.

I. The vibrators shall be inserted and withdrawn out of the concrete slowly. The vibration shall be of sufficient duration and intensity to thoroughly compact the concrete, but shall not be continued so as to cause segregation of aggregate. Vibration shall not be continued at any one point to the extent that localized areas of grout are formed.

J. Vibrations shall not be applied directly or through the reinforcement to sections or layers of concrete which have hardened to the degree that the concrete ceases to be plastic under vibration. It shall not be used to make concrete flow in the forms over distances so great as to cause segregation, and vibrators shall not be used to transport concrete in the forms.

K. Vibration shall be supplemented by such spading as is necessary to ensure smooth surfaces and dense concrete along form surfaces and in corners and locations impossible to reach with the vibrators.

3.08 FINISHING:

A. Finishing of the concrete shall be accomplished as follows:

1. Immediately after removing the forms, all fins or irregular projections shall be removed from all surfaces exposed above ground. On all surfaces the areas of cavities produced by form ties, holes, honeycombing, broken edges or corners, and other surface defects, shall be cleaned and carefully filled, pointed, and trowelled to a true uniform smooth surface with sand-cement mortar mixed in the proportions used in the grade of concrete being furnished. Defective concrete as determined by the Engineer shall be repaired by cutting out the unsatisfactory material and placing new concrete which shall be secured with keys, dovetails or anchors. Concrete for patching shall be drier than the usual mixture and shall be thoroughly tamped into place.

2. All exposed concrete surfaces, that is, those surfaces which will be visible (except floor slabs and sidewalks) shall be finished in the following manner: Forms shall be removed from such surfaces as soon as structurally possible, as approved by the Engineer and all depressions or imperfections immediately patched as described above. The surface shall then be machine or hand-rubbed until the entire surface has a smooth, homogeneous pleasant-appearing finish of uniform texture and color. Any delay in patching or rubbing such surfaces shall be cause for rejection of the entire structure or for requiring the surfaces to be ground smooth and painted or coated with thoroseal as specified in 2.10 of this specification.

3. No mortar wet cement shall be used in finishing except the mortar necessary to fill imperfections. Edging tools shall be used on all exposed top edges.

4. The top surface of walls where exposed shall receive a smooth trowelled finish. Where the top surface joins the sides, a 3/4 inch chamfer shall be provided. All floor slabs shall receive a steel trowel finish.

3.09 MONOLITHIC SLAB FINISHES:

A. Monolithic finish shall be applied to all slabs as follows:

1. Top Slabs: Broomed finish shall be applied to exterior slabs. Strike off concrete and tamp with mechanical or hand screed; remove water and laitance by floating. Steel trowel concrete after it has hardened sufficiently to prevent excess fines from working to surfaces. Bring finish to smooth surface, free from defects and blemishes. Sand and cement dusting not permitted. On pedestrian walks, before final troweling and brooming, and while concrete is still wet, apply Carborundum Company "Silicon Carbide" grains, or approved equal, by sprinkling on at rate of 1/4 lb. per sq. ft. and working in grains with a wood float; follow with final brooming. Brooming shall be done after concrete has further hardened.

3.10 SAMPLES AND TEST:

A. Concrete Control Tests: For strength tests of cylinders during work provide 5 cylinders for each 50 cu. yd. of concrete, a part thereof over 20 cu. yds. used on one days pour. Test 2 at 7 days; 2 at 28 days. One (1) cylinder shall be held as backup, if needed. Make and cure test cylinder per ASTM C31. Cure specimens under laboratory conditions except Engineer may require curing under field conditions when he considers that there is a possibility air temperature may fall below 40 degrees F. Test cylinders per ASTM C39.

B. Testing Questionable Concrete: In event cylinders indicate that concrete does not meet specified strength requirements, Owner reserves right to order cores from hardened concrete secured and tested per ASTM C42, or order load tests per ACI 318, or both. Costs of such cores and tests shall be borne by Contractor. If tests indicate that concrete placed does not conform to drawings and specifications, Contractor shall take measures as directed by Owner to correct deficiency without extra cost to Owner.

C. Slump Test: Test should occur at the beginning of the day, whenever questionable concrete is encountered and whenever test cylinders are taken.

D. Air Test: Test should occur whenever the air temperature changes, the aggregate grading changes and whenever test cylinders are taken.

E. Reinforcing Steel: With each shipment of steel, submit to Engineer three (3) copies of certified mill test covering tensile strength of samples from shipment.

END OF SECTION 033000

Intentionally Blank

DIVISION 5: METALS

SECTION 050800 - MISCELLANEOUS METALS

1.00 GENERAL

1.01 SCOPE

A. Furnish and install all miscellaneous metal work required for this project.

B. Verify conditions and check measurements in the field for metals fabricated to fit job conditions and assume responsibility for proper fitting together of the materials.

C. Prepare surfaces and prime in compliance with Division 9 - Finishes. Paint anchors to be embedded in masonry with asphaltum.

D. Where dissimilar metals come into contact, apply alkali-resistant paint to more active metal or vinyl isolation gasket between metals. Where steel work contacts aluminum, apply two coats of aluminum paint over shop coat.

1.02 SUBMITTALS

A. Shop drawings shall be submitted on all manufactured and fabricated items outlined. Shop drawings shall be submitted per the specification requirements as stated in Division 1.

B. Submit shop drawings showing location, sizes of metal, method of assembly, hardware, fasteners, anchorage, connection with other work and provisions for accommodating work of other trades.

C. Submit manufacturer's data indicating compliance with the particular requirements of these specifications and with the contract drawings.

D. Submit samples required by these specifications.

2.00 PRODUCTS

2.01 METALS

A. Structural steel shapes, ASTM A36.

B. Steel plates to be bent or cold-formed, ASTM A283, Grade C.

C. Steel bars and bar-size shapes, ASTM A306, Grade 65, ASTM A36.

D. Stainless steel, ASTM A167.

E. Black and galvanized welded and seamless steel pipe, ASTM A120.

F. Galvanized carbon steel sheets, ASTM A526, with 1.24 ounces commercial zinc coating complying with ASTM A525.

G. Gray iron castings, ASTM A48.

H. Bolts and nuts for mechanical joints shall be ASTM 242 High Strength Low Alloy.

I. Bolts and nuts, Type 304, stainless steel ASTM A320, unless otherwise specified.

J. Aluminum, ASTM B221, alloy as specified.

2.02 COATINGS

A. Galvanizing:

1. Iron and steel hardware, ASTM A153.

2. Rolled, pressed, and forged steel, shapes, plates, bars and strips 1/8 inch thick and heavier, ASTM A123.

3. Assembled steel products, ASTM A386.

4. Galvanizing repair paint, high zinc dust content paint complying with military specifications MIL-P-21035.

B. Bituminous paint, cold applied asphalt mastic (extra thick film) Steel Structures Painting Council Standard SSPC-PS9.01.

C. Aluminum Finishes:

1. Clear or color anodized, natural finishes, architectural Class 1 coating in accordance with the Aluminum Association Standard designation as stated below. Use Standard Mill Finish for other work, unless otherwise specified.

2. Ornamental work . . . . AA-M32C12A41(OR42)

3. Anodized finishes shall be coated with two coats of clean, non-yellowing lacquer.

2.03 FIXED LADDERS

A. Furnish and install where shown, extruded aluminum ladders and other ladder appurtenances.

B. Units shall be complete with all necessary clips, fastenings, brackets and accessories. Exterior units shall employ stainless steel or aluminum fasteners throughout.

C. Rungs shall be deeply serrated, 1 1/4" square, non-slip, aluminum alloy 6063T6, and shall be capable of withstanding an 800-pound concentrated load midspan without permanent deformation.

D. Side rails shall be 3" open channel or heavy-duty tubular type as detailed. All fasteners shall be of adequate size to provide a 4:1 safety factor, based on ultimate loading. When installing, exercise care in drilling proper size holes for anchorage fasteners so that full rated strength is developed. All welding shall be inert gas-shielded arc, full penetration, fluxless type.

E. Finish shall be "as extruded, mill finish".

F. Ladders and accessories must conform with all current requirements of OSHA.

G. Grab bars shall be of serrated non-slip, tubular extruded aluminum construction. Spacing of horizontals shall match ladder rung spacing.

2.04 OTHER MISCELLANEOUS METAL ITEMS

A. Provide all other Miscellaneous Metal Items required by contract drawings.

3.00 EXECUTION

3.01 FABRICATION

A. Make holes, connections, and other provisions to accommodate work of other trades.

B. Form miscellaneous metal work to shape and size, with sharp lines and angles. Shear and punch to leave clean, true lines and surfaces. Weld permanent connections. Do not use screws or bolts where they can be avoided, screw up tight and nick threads to prevent loosening. Spring curved work evenly.

C. Furnish castings true to pattern, smooth, straight, sound, free from warp, holes and other defects that impair strength or appearance.

D. Exposed surfaces shall have smooth finish and sharp, well defined lines and arises. Mill machined joints, where required, to a close fit. Provide necessary rabbets, lugs and brackets so that work can be assembled in a neat and substantial manner.

E. Conceal fastenings where practicable. Furnish metal thickness and details of assembly and supports to give ample strength and stiffness. Form joints exposed to weather to exclude water.

3.02 INSTALLATION

A. Installation shall be in accordance with the manufacturer’s recommendations where applicable and per the detailed drawings where manufacturer is not involved. As work shall be performed per acceptable industry standard and as approved by the resident inspector.

END OF SECTION 050800

Intentionally Blank

DIVISION 5 - METALS

SECTION 051200 - STRUCTURAL STEEL

1.00 GENERAL

1.01 RELATED DOCUMENTS

A. Drawings and general provisions of the contract, including General and Special Conditions and Division 1 specification section, apply to this section.

1.02 SUMMARY:

A. The Contractor shall furnish all labor, materials and equipment necessary to complete the installation of all structural steel work as shown on the Drawings and specified herein.

1.03 SUBMITTALS

A. Shop Drawings: All shop drawing submittals shall be in accordance with the General Conditions and Division 1 and include the following:

1. Dimensions and required clearances
2. Weights and forces
3. Layout for all equipment including installation details

B. These drawings shall include certified copies of mill reports covering the chemical and physical properties of all steel used in this work. Product data and samples, showing the method of joining, the thickness of metals, plans and profiles shall contain full and complete information. All fabrication of the structural steel prior to shop drawing review shall be done at the Contractor's risk.

1.04 QUALITY ASSURANCE

A. All structural steel materials and installation methods shall be in conformance with the requirements set forth hereafter and with the latest edition of following applicable codes:

1. American Institute of Steel Construction (AISC).
2. "Specifications for Design, Fabrication & Erection of Structural Steel for Buildings".
3. "Code of Standard Practice for Steel Buildings and Bridges".
4. "Specifications for Structural Joints using ASTM A325 or A490 Bolts".
5. All applicable ASTM Specifications, latest date.
6. American Welding Society (AWS) "Structural Welding Code, D1.1.

1.05 DELIVERY, STORAGE, AND HANDLING

A. Preparation for Transport: Prepare all equipment according to the following:

1. Ensure that all the equipment is dry and protected.
2. Package all the equipment to protect from damage while in transport, loading, and unloading.

B. Storage:

1. Carefully prepare for storage and label all equipment and materials after they have been inspected.
2. Store materials to permit easy access for inspection and identification. Support all material off of the ground and protect steel members and package material from corrosion and deterioration.

C. Inspect all materials against reviewed shop drawings at the time of delivery.

D. Materials damaged or not meeting the requirements of the reviewed shop drawings shall be immediately returned for replacement or repair.

2.00 PRODUCTS

2.01 MATERIALS

A. Structural Steel: All structural steel, including beams, columns, angles, plates, rods, and lintels shall be new and unused steel and shall conform to ASTM A36, unless otherwise noted. All structural steel pipe shall conform to ASTM A53, Grade B or ASTM A501, unless otherwise noted. All structural square or rectangular hollow structural sections shall conform to ASTM A500, unless otherwise noted.

B. Anchor Rods and Bolts: All anchor rods and bolts shall be ASTM F1554 Grade 36 unless otherwise noted on the drawings, or specified herein.

C. Connection Bolts: All field bolts shall be high strength steel bolts or high strength direct tension indicating bolts for structural joints and shall conform to ASTM A325, unless otherwise noted.

D. Washers: Hardened steel washers shall be provided as required in the AISC "Specifications for Structural Joints using ASTM A325 or A490 Bolts". Load indicating washers may be used. When load indicating washers are used, the AISC requirements for hardened steel washers shall still apply.

E. Welding: Welding electrodes for ASTM A36 steel shall conform to E70XX series electrodes.

F. Paint: See Division 9 - Finishes.

G. Grout: All grout shall be EMBECO 153 by Master Builders, Cleveland, Ohio or Five Star Grout by U.S. Grout Corporation., or V-3 by W.R. Meadows, Inc., or equal

3.00 EXECUTION

3.01 INSTALLATION

A. Install all equipment specified in this section as indicated on the contract drawings and in accordance with the manufacturer's instructions.

3.02 ANCHOR BOLTS

A. Furnish anchor bolts and setting plans in ample time to prevent delay to other work.

B. Before proceeding with the erection and in time to permit correction of defective setting, the Contractor shall verify the location and elevation of all anchor bolts for column bases. He shall report immediately to the Engineer, in writing, any discrepancies found; otherwise the Contractor shall pay the entire cost of removing and resetting of any anchor bolts later found to be incorrectly placed, and/or the cost of any necessary changes in steel work required by reason of the incorrectly placed bolts.

C. Contractor shall verify any other dimensions and take such measurements as are required for the proper construction of the work.

3.03 CONNECTIONS

A. Substitutions of sections or modifications of details shall be made only when approved by the Engineer and any additional cost is to be borne by the Contractor.

B. Near one end of piece indicate position of distinguishing mark in a manner that agrees with Shop Drawing indications.

C. All welding shall be indicated by using AWS symbols showing type, location, length, size and spacing. Auxiliary views shall be shown to clarify all welding.

D. All connections not specifically shown on the Drawings shall be made by shop welding and field bolting. Connections not shown in the plan details shall be designed in accordance with 4 in the AISC Manual, for Type 1 or 3 using pretensioned bolted connections, and for the reaction shown on the plans, or if the

reaction is not given the capacity of the member when laterally braced.

E. All field connections, unless otherwise shown on the drawings, shall be made using high strength bolts in accordance with AISC, "Specifications for Structural Joints Using ASTM A325 or A490 Bolts". All bolt sizes not specifically shown in the plans shall be 3/4" diameter. Installation may be made using direct tension indicators in accordance with ASTM F959. Either the bolt or washer type direct tension indicator may be used.

F. The Contractor shall use direct tension indicators or shall employ the services of an independent testing laboratory to perform inspection of all structural steel connections according to the AISC "Specifications for Structural Joints using ASTM A325 or A490 Bolts".

3.04 WELDING

A. All work herein relating to welds, welding and oxygen cutting shall be executed in accordance with the standard definitions of welding terms and master chart of welding processes of the American Welding Society (AWS), "Structural Welding Code, D1.1, latest edition. All welding shall be with E70XX Series Electrodes, unless otherwise noted..

B. Welds shall be made only by operators who have been previously qualified by tests, as prescribed in the standard qualification on procedure of the American Welding Society, to perform the type of work required, except that this provision need not apply to tack welds not later incorporated into finished welds carrying calculated stress.

C. No field welding will be allowed on the bottom flange of the beams. All field welding at these locations will be reason for extensive ultrasonic testing or radiographic testing to insure the soundness of the member. This testing shall be paid for by the Contractor. If the tests do not prove satisfactory to the Engineer, the member shall be replaced and all costs associated with replacement paid for by the Contractor.

D. No members are to be spliced without prior written approval of the Engineer.

E. Insofar as possible, do all welding in the shop. Do field welding on the ground to the fullest extent possible consistent with erection requirements. Keep erection welding to a minimum. Quality of field welding shall at least equal that of shop welding.

F. The Contractor will be held responsible for all shrinkage or distortion in the welds or parent material, and will be required to remedy or replace any defective work. The Contractor shall provide adequate safety measures to prevent damage to all adjacent and integrate materials and structural elements for all required field welding. The Contractor shall provide adequate sharing, as required.

3.05 BOLTS

A. All bolted connections shall be made with high strength bolts in friction.

B. Direct tension indicators shall be of one type and one manufacturer.

C. If direct tension indicators are used, the Contractor shall supply the Engineer with brochures from the manufacturer, which shall detail installation procedures of their product. This shall include feeler gauges for checking load indicating washers.

D. In lieu of subsections 3.05B and 3.05C, the Contractor shall employ the services of an independent testing laboratory. The laboratory shall submit two copies of their testing report to the Engineer, which shall include visual testing of welds and torque testing (355 ft.-lb.) of all bolts. All bolts found to have insufficient torque shall be retightened by the Contractor and again tested after connection.

3.06 ERECTION

A. All work shall be assembled and erected in place as rapidly as the progress of the general construction work will permit. It shall be the Contractor's responsibility to insure that all members are connected temporarily with sufficient bolts to insure the safety of the structure until the permanent connections are

made.

B. The Contractor shall use care in storing, handling and erecting all material and shall support the same properly at all times to insure that no piece will be bent, twisted or otherwise injured. Material damaged due to the carelessness of the Contractor shall be corrected to the approval of the Engineer before being erected at the Contractor's expense.

C. Temporary bracing and guide lines shall be provided to adequately protect all persons and property and to insure proper alignment.

D. The Contractor shall be responsible for the accurate setting and leveling of all bearing plates or setting plates. Bearing plates or setting plates shall be leveled on shims.

E. The Contractor alone shall be responsible for the correct fitting of all structural members and for the elevation and alignment of the finished structure.

F. No bolting or welding shall be done until as much of the structure as will be stiffened by the welding or bolting has been properly aligned.

G. Drift pins shall not be used to enlarge unfair holes in main material. Holes that must be enlarged to admit bolts shall be reamed.

H. Upon completion of erection and before final acceptance, the Contractor shall remove all falsework, rubbish and temporary buildings used by him.

I. The Contractor shall place Grout under all bearing and leveling plates and all areas noted on the Drawings.

3.07 INSPECTION

A. Access to places where materials for this Contract are being fabricated or produced shall be provided to the Engineer for the purpose of inspection.

B. The Engineer shall reject any material which does not conform to all of the requirements of the Drawings and Specifications.

END OF SECTION 051200

DIVISION 6 – WOOD, PLASTICS AND COMPOSITES

SECTION 061000 - CARPENTRY

1.00 GENERAL

1.01 RELATED DOCUMENTS

A. Drawings and general provisions of the contract, including General and Special Conditions and Division 1 specification section, apply to this section.

1.02 SUMMARY

A. The Contractor shall furnish all labor, materials, equipment and services necessary to install the carpentry required for this project as shown on the Drawings and as specified herein.

B. This section covers the carpentry materials including:

1. Wood framing
2. Wood furring
3. Wood siding
4. Nailers
5. Related hardware

C. To avoid divided responsibility, the General Contractor shall assume complete responsibility for the furnishing and installation of all items relating to carpentry.

1.03 SUBMITTALS

A. Product Data: Include the following:

1. Product literature
2. Complete product description
3. Manufacturer's warranty
4. A list of all deviations from drawings and specifications.

B. Shop Drawings: All shop drawing submittals shall be in accordance with the General Conditions and Division 1 and include the following:

1. Dimensions and required clearances
2. Weights and forces
3. Layout installation details
4. Submit shop drawings of wood roof trusses, floor trusses, and other shop fabricated work. Indicate species and stress grades of lumber to be used and details of metal connectors to be used at joints. Show pitch, span and location of trusses or panels. Provide large scale details of typical connections and anchorages.

C. Wood Treatment Data: Submit certification by the treatment plant that required treatments comply with the specified standards.

D. Material Certificates: Where dimension lumber is provided to comply with minimum allowable unit stresses, indicate species and grade selected for each use, and submit evidence of compliance with specified requirements.

2.00 PRODUCTS

2.01 STRUCTURAL LUMBER

A. All structural lumber including studding, sills, plates, nailers, etc., shall be No. 1 common southern pine or Douglas Fir with not more than 19% moisture content. Each piece of lumber (or bundle in bundled stock)

shall bear official grade and trademark of association having jurisdiction in the area in which the woods are produced. All lumber must be sound, thoroughly seasoned, well manufactured and free from warp that cannot be corrected in process of bridging or nailing.

B. All wood to come in contact with the concrete floor or masonry walls shall be pressure preservative treated meeting the requirements of AWPA Standards P-5 and Federal Standards TT-W-550 and TT-W-571. The pressure treatment used shall be Koppers Company "Wolmanized" process, Osmose Wood Preserving Company, or equal. The finished treated wood shall be clean, oil free and odorless with the preservative chemicals affixed to the wood in such a manner to prevent leaching.

C. Dimension and board lumber, and timbers shall be identified by the grademark of the recognized grading association or of any independent lumber grading inspection agency authorized to grade the species. The association or independent inspection agency and the grading rules under which they grade shall be certified by the Board of Review, American Lumber Standards Committee.

2.02 PLYWOOD

A. All plywood, not otherwise shown, shall be Douglas Fir and shall be identified with the DFPA grade trademark of the American Plywood Association, and shall meet the requirements of the latest edition of U.S. Product Standard PS 1-74 for Softwood Plywood.

B. Roof sheathing to be 5/8" plywood, DFPA B-D Exterior Grade. Panels shall bear official grade and trademarks of the American Plywood Association.

2.03 ROOF AND FLOOR TRUSSES

A. General - Provide roof trusses where shown. Comply with the applicable requirements of the NLMA's "National Design Specifications for Stress Graded Lumber and Its Fastenings" and the Truss Plate Institute's Light Metal Connected Wood Trusses".

B. The roof trusses shall be factory manufactured with wood webs, structural wood chords (f = 1,500, E = 1,760,000).

1. Structural wood chord members shall be of machine stress rated lumber of approved joist grade and kiln dried to a maximum moisture content of 19%. All end joints shall be finger joints conforming of details approved by the building code or authority.

C. Design: The joist shall be custom designed to fit the dimensions and loads indicated on the plans. All designs shall be in accordance with allowable values assigned by the building code approval. Complete design calculation showing internal layout, member forces and stress control points are to be available upon request for each joist design. The design of the joists is to be under the supervision of a Registered Professional Engineer.

2.04 TRIM, BASE, MOLDING, ETC.

A. The trim around doors shall be in single lengths without splicing of clear grade birch or white pine, 1-1/2" wide and 1/2" thick. The trim at corners shall be clear grade white pine or birch, 1" wide corner bead. It shall be finished smooth and free from machine or tool marks.

B. Trim at corners shall be clear grade white pine or birch, 1" wide corner bead.

C. Vinyl base/cove molding shall be provided, as detailed on the plans, throughout the building. Base/cove to be 4" wide of rigid vinyl. The Contractor shall submit a sample of the base/cove to the Engineer for acceptance prior to installation.

2.05 ROUGH HARDWARE

A. The Contractor shall furnish all nails, bolts, nuts, and miscellaneous devices required for installation of lumber, trim, drywall, etc. Materials used shall be standard manufacture.

3.00 EXECUTION

3.01 INSTALLATION

A. The contractor is responsible for establishing lines and levels and laying out the work. This shall include the erection of temporary railings, barriers, planking, etc., for protection of complete or partially complete work.

3.02 CONSTRUCTION REQUIREMENTS

A. Furnish snug fit interior finish in very best manner, hand sanding rough places and using proper number and size of nails, which must be set ready to be finished by paint contractor. Blind nail where possible.

B. No hammer-scarred, butchered work will be accepted and all finish work shall be of size and design as indicated on the drawings with all joints and rough edges thoroughly sanded and placed in good condition ready to be painted.

C. All finish work shall be assembled at the mill, insofar as is practical and delivered ready for erection.

D. When it is necessary to cut and fit on the job, the material shall be made with ample allowance for cutting and all work shall be made in accordance with measurements taken at the job, using mitered joints.

E. Moldings shall be true to details, cleanly cut and sharp, and machine sanded ready for finish.

F. Mill assemblies shall be jointed with nails, screws, and glue where practical.

G. All wood grounds or bucks to be fastened to masonry or concrete shall be fastened by bolting to bolts set in the masonry or by wood plugs, toggle bolts or other approved methods. No grounds shall be installed by shooting or driving studs into such surface.

H. Construct paneling to allow movement of panels and edge-glued pieces narrow enough to prevent warping.

3.03 STRUCTURAL LUMBER

A. Contractor shall install work plumb, level and true, accurately set to required lines and levels and rigidly secured in place.

B. Provide all necessary blocking required for support of utilities. Note on plans any special framing and headers which may be required.

C. All lumber shall be stored at location(s) which insure proper drainage, ventilation, and protection from the weather.

3.04 ROOF SHEATHING

A. The sheathing shall be well nailed to the joists, using 8d common smooth nails, spaced 12" at panel edges and 12" at intermediate supports. The DFPA "B" face shall be placed up.

3.05 ROOF TRUSSES

A. The joists if stored prior to erection shall be stored in a vertical position and protected from the weather. They shall be handled with care so they are not damaged.

B. The trusses are to be erected and installed in accordance with the plans, the approved truss drawings and installation suggestions. Temporary construction loads which cause member stresses beyond design limits are not permitted. Erection bracing in addition to specified bridging is to be provided to keep the trusses straight and plumb as required to assure adequate lateral support for the individual truss and entire system until the sheathing material has been applied. The contractor will give notification prior to enclosing the trusses to provide opportunity for inspection of the installation.

3.06 TRIM, BASE, MOLD, ETC.

A. Where required along corners, at the base of walls, etc., the Contractor will install the specified trim, base, molding, etc., in a workmanlike manner.

B. All joints shall be mitered (corners or molding) or coped (interior angles), tight and formed to conceal shrinkage.

C. All nail heads shall be set and receive putty.

3.07 ROUGH HARDWARE

A. The Contractor shall install all required rough hardware in a workmanlike manner, driving all nails home, tightening all nuts on anchor bolts, etc. Poor or shoddy installation of the required rough hardware, or less than acceptable quantities of rough hardware will form a basis for rejection by the Engineer, requiring the Contractor to make appropriate amends.

END OF SECTION 061000

DIVISION 06 – WOOD, PLASTICS, AND COMPOSITES

SECTION 067000 - FIBERGLASS REINFORCED POLYMER (FRP) PRODUCTS AND FABRICATIONS

1.00 GENERAL

1.01 RELATED DOCUMENTS:

A. Drawings and general provisions of Contract, including General and Supplementary Conditions and Division-1 Specification Sections, apply to work of this section.

1.02 SUMMARY:

A. This section includes the FRP Products & Fabrications for FRP Foam Core Building Panels.

1.03 SCOPE OF WORK:

A. Furnish all labor, materials, equipment and incidentals governed by this section necessary to install the fiberglass reinforced polymer (FRP) products as specified herein.

1.04 QUALITY ASSURANCE:

A. The material covered by these specifications shall be furnished by an ISO-9001 certified manufacturer of proven ability who is regularly engaged in the manufacture, fabrication and installation of FRP systems.

B. Substitution of any component or modification of system shall be made only when approved by the Architect or Design Engineer.

C. Fabricator Qualifications: Firm experienced in successfully producing FRP fabrications similar to that indicated for this project, with sufficient production capacity to produce required units without causing delay in the work.

D. In addition to requirements of these specifications, comply with manufacturer's instructions and recommendations for work.

1.05 DESIGN CRITERIA:

A. Design live loads shall be in accordance with the governing building code as follows:
   1. Wall Panels shall be designed for the following wind load conditions using the methods in ASCE 7:
      a) Wind Velocity - 115 mph
      b) Exposure - C
      c) Wind Importance Factor - 1w=1.0
      d) Maximum Deflection - L/180
   2. Roof Panels shall be designed for the following load conditions using the methods in ASCE 7 (the effect of ponding shall be considered):
      a) Design Snow Load - 20 psf
      b) Design Rain Load - 15 psf
      c) Design Live Load - 20 psf
      d) Maximum Deflection – L/240

B. Structural connections shall be designed to transfer the design loads.

C. Reinforce and stiffen penetrations in foam core panels in accordance with the manufacturer's recommendations.

1.06 SUBMITTALS:

A. Shop drawings of all fabricated foam core building panels shall be submitted to the Design Engineer for approval.

B. Manufacturer's catalog data showing:

1. Materials of construction
2. Dimensions, spacings, and construction of foam core building panels.

C. Detail shop drawings showing:

1. Dimensions
2. Sectional assembly
3. Location and identification mark
4. Size and type of supporting frames required

1.07 SHIPPING AND STORAGE INSTRUCTIONS:

A. All systems, sub-systems and structures shall be shop fabricated and assembled into the largest practical size suitable for transporting.

B. All materials and equipment necessary for the fabrication and installation of foam core building panels and appurtenances shall be stored before, during, and after shipment in a manner to prevent cracking, twisting, bending, breaking, chipping or damage of any kind to the materials or equipment, including damage due to over exposure to the sun. Any material which, in the opinion of the Design Engineer, has become damaged as to be unfit for use, shall be promptly removed from the site of work, and the Contractor shall receive no compensation for the damaged material or its removal.

C. Identify and match-mark all materials, items and fabrications for installation and field assembly.

2.00 <u>PRODUCTS</u>

2.01 GENERAL:

A. Materials used in the manufacture of the FRP products shall be raw materials in conformance with the specification and certified as meeting the manufacturer's approved list of raw materials.

B. All raw materials shall be as specified by the contract.

C. The visual quality of the pultruded shapes shall conform to ASTM D4385.

D. All foam core building panels shall be manufactured using a pultruded process utilizing vinyl ester resin with flame retardant and ultraviolet (UV) inhibitor additives. A minimum 7 mil synthetic surface veil fabric shall encase the glass reinforcement. FRP shapes shall achieve a flame spread rating of 25 or less in accordance with ASTM test method E-84, the flammability characteristics of UL 94 V0 and the self-extinguishing requirements of ASTM D635.

E. If required, after fabrication, all cut ends, holes and abrasions of FRP shapes shall be sealed with a compatible resin coating.

F. FRP products exposed to weather shall contain an ultraviolet inhibitor and additional ultraviolet five (5) mil minimum UV coating field applied.

G. All exposed surfaces shall be smooth and true to form, consistent with ASTM D4385.

H. Manufacturers:

1. Strongwell (or equal)

I. Pultruded FRP products shall be manufactured and fabricated in the USA. Manufacturer shall provide a written Certificate of Compliance.

J. The materials covered by these specifications shall be furnished by an ISO-9001 certified manufacturer.

2.02 FRP FOAM CORE BUILDING PANELS:

2.03 Materials

A. Each panel shall be manufactured using a pultruded process utilizing vinyl ester resin with flame retardant and UV inhibitor additives. A synthetic surface veil shall be the outermost layer covering the exterior surface. The FRP panel shall achieve a flame spread rating of 25 or less in accordance with ASTM test method E-84.

B. Exposed foam core panel ends shall be encapsulated with FRP pultruded materials. All exposed ends of the panels must be encapsulated or coated with a resin similar to the skin resin to maintain the corrosion and weather resistant qualities of the total panel.

C. Mechanical and physical properties shall meet or exceed the values listed in Table 3.

Table 3-Foam Core Building Panel Properties (nominal)

Mechanical Property (Nominal)	Units	3" Panel 76.2 mm
Flexural Strength	psi	869
	N/mm^2	6
Flexural Modulus	10^6 psi	.17
	10^3 N/mm^2	1.17
Short Beam Shear	psi	90
	N/mm^2	0.62
Pullout Test (Pull Through)		
* Std. Washer (1" dia. w/3/8" hole)	lbs	730
(25.4 mm dia. w/9.525 mm hole)	N	3,245
* Fender Washer (2" dia. w/ 1/2" hole)	lbs	1,620
(50.8 mm dia. w/ 12.7 mm hole)	N	7,209
Crush Test (6" x 6" Load Plate)	lbs	6,750
(152.4 mm x 152.4 mm)	N	30,037
Crush Test (Full Width)		
* 1" dia. Bar	lbs	
(25.4 mm dia. Bar)	N	
* 2-1/2" dia. Bar	lbs	18,800
(63.5 mm dia Bar)	N	83,660

a) **Table 3-Foam Core Building Panel Properties (nominal) – cont'd**

Physical Property (Nominal)	Units	3" Panel 76.2 mm
Weight	lbs/linear ft (kg/lin. m)	7.85 (11.68)
Panel Width	in. (mm)	24 (609.6)
"R" Factor		17
Coefficient of Thermal Expansion*	10^{-6} in/in/°F	5.2
	10^{-6} mm/mm/°C	9.36
Foam Density	#/cu. Ft (kg/m^3)	4 (64.1)
Flame Spread Rating		
* Fiberglass Composite Skin		Max. 25
* Foam		Max. 25

* Typical Values

b) Fiberglass pultruded foam core panels to be manufactured by Strongwell (or equal).

D. Connections

Panels will be designed for tongue-in-groove joint connections.

The panels are to be fastened to the super structure with stainless steel or fiberglass fasteners as shown on the approved shop drawings.

E. Approved Manufacturers

Strongwell (or equal)

PART 3 – EXECUTION

3.01 PREPARATION:

A. Coordinate and furnish anchorages, setting drawings, diagrams, templates, instructions and directions for installation of anchorages, including concrete inserts, sleeves, anchor bolts and miscellaneous items having integral anchors that are to be embedded in concrete or masonry construction.

B. Coordinate delivery of such items to project site.

3.02 INSPECTION AND TESTING:

A. The Design Engineer shall have the right to inspect and test all materials to be furnished under these specifications prior to their shipment from the point of manufacture.

B. All labor, power, materials, equipment and appurtenances required for testing shall be furnished by the Contractor at no cost to the Owner.

3.03 INSTALLATION, GENERAL:

A. Fastening to in-place construction: Provide anchorage devices and fasteners where necessary for securing miscellaneous FRP fabrications to in-place construction; include threaded fasteners for concrete, toggle bolts, through-bolts, lag bolts and other connectors as indicated by the Panel Manufacturer.

B. Cutting, fitting and placement: Perform cutting, drilling and fitting required for installation of miscellaneous FRP fabrications. Set FRP fabrication accurately in location, alignment and elevation; with edges and surfaces level, plumb, true and free of rack; measured from established lines and levels.

C. Provide temporary bracing or anchors in form work for items that are to be built into concrete masonry or similar construction.

3.04 ALL FRP INSTALLATION:

A. If required, all field cut and drilled edges, holes and abrasions shall be sealed with a catalyzed resin compatible with the original resin as recommended by the manufacturer.

B. Install items specified as indicated and in accordance with manufacturer's instructions.

END OF SECTION 067000

DIVISION 7 - THERMAL AND MOISTURE PROTECTION

SECTION 071113 - BITUMINOUS DAMP PROOFING

1.00 GENERAL

A. Related Documents: The general provisions of the Contract apply to the work specified in the section.

B. Scope: Furnish all labor and materials to complete damp proofing of all below grade concrete work. Additional damp proofing shall be as specified herein and as shown on the plans.

C. Surface Conditions: Application of material constitutes acceptance of surface conditions by waterproofing contractor. Before starting work, check the following:

1. Concrete walls and tops of footings: Cleaned of fins, mortar droppings, mud, oil, etc.

2. Wall ties cut back and pointed.

3. Pipes, etc., through walls: caulked or grouted tightly in place, flush with outside of wall.

4. Exterior surfaces of foundation walls below grade to be damp proofed shall be prepared in accordance with the damp proofing manufacturer's recommendations.

5. All pre-cast concrete structures not specifically required to be coated by the pre-caster.

2.00 PRODUCTS

A. "Sonneborn Hydrocide 700 Mastic", or approved equal, a heavy-bodied non-sag coating, formulated with a heavy content of selected bitumens for trowel application.

B. Sonneborn 700B, or approved equal for spray or brushed application. Brush application shall receive two coats. Total mil thickness shall be 10-12 mils dry film thickness. Surface preparation shall be brush-off blast (SSPC-SP7) and in accordance with the manufacturer's recommendations.

C. Tnemec Series 46H-413 for spray application. Total mil thickness shall be 10-12 mils dry film thickness. Surface preparation shall be brush-off blast (SSPC-SP7) and in accordance with the manufacturer's recommendations.

3.00 EXECUTION

A. Apply in accordance with manufacturer's printed specifications to 1/8" film thickness.

3.01 GUARANTEE

A. This Contractor shall guarantee dampproofing work for a period of one (1) year protecting Owner against dampness on inside face of dampproofed walls caused by defective materials or workmanship.

END OF SECTION 071113

Intentionally Blank

DIVISION 7 - THERMAL AND MOISTURE PROTECTION

SECTION 072116 - INSULATION

1.00 GENERAL

A. This section includes everything necessary for and incidental to the execution and completion of building insulation as indicated on the drawings and specified herein.

B. To avoid divided responsibility, the General Contractor shall assume complete responsibility for the furnishing and installation of all items relating to building insulation.

2.00 PRODUCTS

2.01 FOUNDATION PERIMETER INSULATION

A. Extruded Polystyrene Board Insulation: Rigid closed-cell extruded expanded polystyrene complying with FS HH-I-524 Type IV, 20 psi compressive strength, aged k-value of 0.20, 1.1 perm-inch max. vapor rating, 0.3% max water absorption.

B. The polystyrene shall be Owen Corning Foamular 250 or equal. Insulation boards shall be manufactured 2" thick and 24" wide.

2.02 EXTERIOR STUD WALL INSULATION

A. The wall insulation shall be Johns Manville Comfort-Therm R-13 Premium Fiberglass Batt Insulation or equal; 3 1/2" thick x 15" wide with attached tear resistant vapor barrier.

2.03 CEILING INSULATION

A. The ceiling insulation shall be a batten type, mineral glass fiber blanket insulation having a minimum "R" value of 38. This shall be a 6" layer of unfaced and a 6" layer of poly vapor barrier faced Owens Corning Fiberglass insulation, Johns Manville Fiberglass insulation or equal.

3.00 EXECUTION

3.01 GENERAL

A. Prior to installing the insulation, the Contractor shall remove all dirt, oil, masonry, waste and debris. All fins and projections left from concrete and block work shall be removed to provide an even surface.

B. All insulation shall be installed according to the manufacturer's recommendations and as indicated on drawings.

C. Clean up rubbish and empty containers daily and pile in a convenient place for easy removal by General Contractor.

D. Perimeter Foundation Insulation to be installed horizontally as indicated on the drawings.

3.02 SHOP DRAWINGS

A. The Contractor shall submit four (4) copies of the Shop Drawings or catalog cuts for approval. These Shop Drawings shall contain the pertinent insulating, vapor conductive and fireproofing properties of the materials the Contractor is proposing to use.

END OF SECTION 072116

Intentionally Blank

DIVISION 7: THERMAL AND MOISTURE PROTECTION

SECTION 072400 - DOOR/WINDOW CAULKING AND SEALANTS

1.00 GENERAL

A. Related Documents:

1. The general provisions of the Contract apply to the work specified in this section.

2.00 PRODUCTS

2.01 CAULKING AND SEALANTS

A. Caulking compounds shall be elastic, waterproof, and non-corrosive, but not brittle hard; and the oils shall not leave the body of the material to stain adjacent work.

B. Caulking compounds shall be oleo-resinous compounds requiring no priming of the surface, and conforming to the provisions of Federal Specifications U.S. TT-C-589b.

C. Sealants shall be one (1) part acrylic terpolymer compounds requiring no primer and conforming to Federal Specification U.S. TT-C-230a.

D. Color of caulking and sealant shall be same as adjacent material.

E. Joint backing, where required, shall be closed-cell polyethylene in round or square shape. It shall also be non-staining, non-absorbent and capable of at least 30% recover.

F. Manufacturers (or as approved by Engineer):

1.	Caulking Compound:	Tremco Manufacturing Company DAP, Inc. Pecora Chemical Corporation
2.	Sealants:	Tremco Manufacturing Company General Electric Company DAP, Inc. Pecora Chemical Corporation

3.00 EXECUTION

A. All caulking and sealants shall be applied by skilled applicators.

B. Examine all surfaces prior to application of material and notify the Engineer of any conditions detrimental to a satisfactory application.

C. All surfaces to receive caulking and/or sealants shall be dry and cleaned thoroughly of all foreign matter likely to affect the performance of the application. No material is to be applied when the temperature is below 40 degrees F.

D. Surfaces with protective coatings with which the sealant will come into contact, such as new aluminum or bronze, shall be wiped with xylol or a methyl ethyl ketone solvent to remove the protective coating and any oil deposit that may be left on the metal surfaces.

E. Masonry surfaces shall be cleaned with a wire brush and blown clean. Any waterproofing treatments which would contaminate the joint shall be completely removed.

F. Concrete surfaces shall be cleaned with a wire brush and blown clean. Any waterproofing treatments which would contaminate the joint shall be completely removed. Install “Primer” as per manufacturer’s written instructions.

G. Where joints are deeper than ½", polyethylene joint backing shall be used and packed into the joint to within ½" of the surface. A size shall be selected so as to allow for a minimum of 30% compression of the backing when inserted into the joint. Where joints are ¾" wide, the backing shall be placed so that the depth of the joint to receive sealant does not exceed ¼".

H. Sealant and caulking shall be gun applied through a nozzle opening of such a diameter than the full bead of sealant is gunned into the joint, filling the joint completely (a superficial or skin bead shall be acceptable).

I. All beads shall be tooled immediately after application to insure firm, full contact with the inner faces of the joint. Excess material shall be struck off with a tooling stick or knife.

J. The finished bead shall be flush with the surface, or as otherwise indicated.

K. Remove all excess materials and smears adjacent to the joint as work progresses.

L. Caulk or seal all openings as shown on the drawings, and all openings which normally require caulking or sealant including but not being limited to the following:

1. Joints at head and jambs between exterior door frames and adjoining surfaces, both sides.

2. Interior and exterior joints where required or indicated.

3. Joint around head and jambs, at surfaces at exterior metal door frames, both sides.

4. Joint at head jamb and sill at window frames and adjoining surfaces.

END OF SECTION 072400

DIVISION 7 - THERMAL AND MOISTURE PROTECTION

SECTION 072616 - VAPOR BARRIERS

1.00 **GENERAL**

A. The Contractor shall furnish all labor material and equipment necessary to complete the work under this vapor barrier section as shown on the drawings and as specified herein.

1. Vapor barriers shall be installed under all concrete slabs on grade.

2.00 **PRODUCTS**

A. Polyethylene Vapor Barrier: 6 mil carbonated polyethylene film, rated 0.1 perms or less.

3.00 **EXECUTION**

A. Provide lapped seams and lap vapor barriers onto other work at edges of coverages and at penetrations of barriers by other work.

B. Contractor shall take every precaution and protect the vapor barrier from punctures and tears.

END OF SECTION 072616

Intentionally Blank

DIVISION 7 – THERMAL AND MOISTURE PROTECTION

SECTION 074116 – INSULATED METAL ROOF PANELS

1.00 GENERAL

1.01 SECTION INCLUDES

A. Foamed-insulation-core standing seam metal roof panels, with related metal trim and accessories.

1.02 QUALITY ASSURANCE

A. Manufacturer/Source: Provide metal panel assemblies and accessories from a single manufacturer approved under an accredited third-party quality control program

B. Manufacturer Qualifications: Approved manufacturer listed in this Section with minimum ten years' experience in the manufacturing of similar products and successful use in similar applications.

1. Approval of Comparable Products: Submit the following in accordance with project substitution requirements, within time allowed for substitution review:

   a) Product data, including certified independent test data indicating compliance with requirements.
   b) Samples of each component.
   c) Sample submittal from similar project.
   d) Project references: Minimum of five installations not less than five years old, with Owner and Architect contact information.
   e) Sample warranty.
   f) Certificate from an accredited third-party Quality Control Program.

2. Substitutions following award of contract are not allowed except as stipulated in Division 01 General Requirements

3. Approved manufacturers must meet separate requirements of Submittals Article.

C. Installer Qualifications: Experienced Installer with minimum of five years' experience with successfully completed projects of a similar nature and scope.

1. Installer's Field Supervisor: Experienced mechanic [certified by metal panel manufacturer] supervising work on site whenever work is underway.

1.03 ADMINISTRATIVE REQUIREMENTS

A. Preinstallation Meeting: Prior to erection of framing, conduct preinstallation meeting at site attended by Owner, Architect, metal panel installer, metal panel manufacturer's technical representative, inspection agency, and related trade contractors.

1. Coordinate building framing in relation to metal panel system.
2. Coordinate openings and penetrations of metal panel system.
3. Coordinate work of openings and penetrations and manufacturer's accessories with installation of metal panels.

1.04 ACTION SUBMITTALS

A. Product Data: Manufacturer's data sheets for specified products.

B. Shop Drawings: Show layouts of metal panels. Include details of each condition of installation, panel profiles, and attachment to building. Provide details at a minimum scale 1-1/2-inch per foot

of edge conditions, joints, fastener and sealant placement, flashings, openings, penetrations, curbs, vents, snow guards, lightning arresting equipment, and special details. Make distinctions between factory and field assembled work.

1. Include data indicating compliance with performance requirements.
2. Indicate points of supporting structure that must coordinate with metal panel system installation.
3. Include structural data indicating compliance with performance requirements and requirements of local authorities having jurisdiction.

C. Samples for Initial Selection: For each exposed product specified including sealants. Provide representative color charts of manufacturer's full range of colors.

1. Samples for Verification:

a) Provide 12-inch- long section of each metal panel profile.
b) Provide color chip verifying color selection.

1.05 INFORMATIONAL SUBMITTALS

A. Product Test Results: Indicating compliance of products with requirements.

B. Qualification Information: For Installer firm and Installer’s field supervisor.

C. Accreditation Certificate: Indicating that manufacturer is accredited under an accredited third-party quality control program, including IAS AC472 and based upon chapter 17 of the International Building Code (IBC).

D. Buy American Certification: Manufacturers' letters of compliance acceptable to authorities having jurisdiction, indicating that products comply with requirements.

E. Warranty:

1. Submit manufacturer’s written two (2) year limited warranty providing panels to be free from defects in materials and workmanship, beginning from the date of substantial completion excluding coil coatings (paint finishes) that are covered under a separate warranty.
2. The installation contractor shall issue a separate warranty against defects in installed materials and workmanship, beginning from the date of substantial completion of the installation.

1.06 CLOSEOUT SUBMITTALS

A. Maintenance data.

B. Manufacturer's Warranty: Executed copy of manufacturer's warranty.

1.07 DELIVERY, STORAGE, AND HANDLING

A. Protect products of metal panel system during shipping, handling, and storage to prevent staining, denting, deterioration of components, or other damage. Protect panels and trim bundles during shipping. Protect painted surfaces with a protective covering before shipping.

1. Deliver, unload, store, and erect metal panels and accessory items without misshaping panels or exposing panels to surface damage from weather or construction operations.
2. Store in accordance with Manufacturer's written instructions. Provide wood collars for stacking and handling in the field.
3. Shield foam insulated metal panels from direct sunlight until installation.

1.08 WARRANTY

A. Special Manufacturer's Warranty: Submit Manufacturer's two (2) year limited warranty providing panels to be free from defects in materials and workmanship, beginning from the date of substantial completion excluding coil coatings (paint finishes) that are covered under a separate warranty.

B. The installation contractor shall issue a separate warranty against defects in installed materials and workmanship, beginning from the date of substantial completion of the installation.

C. Special Panel Finish Warranty: Submit Manufacturer's limited warranty on the exterior paint finish for adhesion to the metal substrate and limited warranty on the exterior paint finish for chalk and fade.

1. Fluoropolymer Two-Coat System:
   a) Color fading in excess of [5] or [10] for copper, silver metallic and bright red; Hunter units per ASTM D 2244.
   b) Chalking in excess of [6] for copper, silver metallic and bright red or [8] rating per ASTM D 4214.
   c) Failure of adhesion, peeling, checking, or cracking.

2.00 <u>PRODUCTS</u>

2.01 MANUFACTURER

A. Basis of Design Manufacturer: Metl-Span, a Nucor company; Lewisville, Texas

1. Provide basis of design product

2.02 PERFORMANCE REQUIREMENTS

A. General: Provide metal panel system meeting performance requirements as determined by application of specified tests by a qualified testing facility on manufacturer's standard assemblies.

B. Roof Panel Radiative Property Performance:
1. Energy Star Qualified: Listed on USDOE ENERGY STAR Roof Products Qualified Product List.
2. Cool Roof Rating Council: Listed in CRRC Rated Product Directory, with minimum properties as required by applicable Energy efficiency or High-Performance Green Building standard.

C. Structural Performance: Provide metal panel assemblies capable of withstanding the effects of indicated loads and stresses within limits and under conditions indicated, as determined by ASTM E 72 or ASTM E 1592 applied in accordance with ICC AC 04, Section 4, Panel Load Test Option or Section 5, Panel Analysis Option:

1. Wind Loads: Determine loads based on uniform pressure, importance factor, exposure category, and basic wind speed indicated on drawings.
   a) Roof Panel Wind Uplift Testing: Certify capacity of metal panels by testing of proposed assembly per ASTM E 72 or ASTM E 1592.
   b) Roof Panel Snow Loads: **[**25 lbf/sq. ft.**]**.
   c) Deflection Limits: Withstand inward and outward wind-load design pressures in accordance with applicable building code with maximum deflection of 1/180 of the span with no evidence of failure.
   d) Roof Panel Air Infiltration, ASTM E 1680: Maximum 0.023 cfm/sq. ft. (0.115 L/s per sq. m) at static-air-pressure difference of 12 lbf/sq. ft. (575 Pa).

e) Roof Panel Water Penetration Static Pressure, ASTM E 1646: No uncontrolled water penetration at a static pressure of 20 lbf/sq. ft. (958 Pa).

f) Test procedure for susceptibility to leakage of discontinuous roof systems protocol TAS 114: Water applied to a depth of 6” above the lowest section of roof profile. No water infiltration observed during the seven-day test period.

g) Thermal Movements: Allow for thermal movements from variations in both ambient and internal temperatures. Accommodate movement of support structure caused by thermal expansion and contraction. Allow for deflection and design for thermal stresses caused by temperature differences from one side of the panel to the other.

h) Thermal Performance: When tested in accordance with ASTM C 518, Measurement of Steady State thermal Transmission, the panels shall provide a k factor of 0.114 btu/sf/hr/deg F at a 35° F (1.67° C) mean temperature.

2.03 INSULATED METAL ROOF PANELS

A. Standing Seam, Foamed-Insulation-Core Metal Roof Panels: Structural metal panels consisting of an exterior standing seam with an interior tongue and groove joint, coupled with a vapor seal in the standing seam, and provides superior resistance to air and moisture intrusion. Attached with concealed fasteners to the structure.

1. Basis of Design: Metl-Span**, CFR Insulated Metal Panel**.

   a) **G-90 Galvanized Coated Steel:** ASTM A 653 **or Aluminum-Zinc Alloy-Coated Steel**: ASTM A 792/A 792M, structural quality, Grade 50, Coating Class AZ50 (Grade 340, Coating Class AZM150), prepainted by the coil-coating process per ASTM A 755/A 755M.

2. Exterior Face Sheet: **[**24 gauge**]** coated thickness, with stucco embossed**]** surface.

   a) Finish: Fluoropolymer two-coat system
   Color: As selected by Owner from manufacturer's standard colors

3. Interior Face Sheet: **[**24 gauge**]** coated thickness, with stucco embossed surface Mesa profile.
   a) Finish: Fluoropolymer two-coat system
   b) Color: As selected by Owner from manufacturer's standard colors

4. Endlaps: Provide panels with factory endlaps, notching, swedging and backer plates; where panel lengths permit.

5. Low Eave Treatment: Provide cutback for trim/gutter installation; where panel lengths permit.

6. Panel Width: 42 inches [as shown on drawings].

7. Panel Thickness: 5 inch **[**As required to meet performance requirements**]**

8. Insulating Core: Polyurethane with zero ozone depletion potential blowing agent
   a) Closed Cell Content: 90% or more as determined by ASTM D 6226
   b) Compressive Strength: As required to meet structural performance requirements and with a minimum of 22 psi as determined by ASTM D 1621
   c) Shear Strength: As required to meet structural performance requirements and with a minimum of 36 psi as determined by ASTM C 273
   d) Tensile Strength: As required to meet structural performance requirements and with a minimum of 41 psi ASTM D 1623
   e) Minimum Density: 2.0 pcf as determined by ASTM D 1622

f) **Thermal Resistance (R-Value)**: 43.7 value deg. F * hr * sq. ft./Btu (K * sq. m/W) as determined by ASTM C 518 at 35 degrees Fahrenheit mean temperature.

9. Heat Transfer Coefficient (U-factor)**:** 0.027 value Btu/hr * sq. ft. * deg. F insert corresponding value (W/K * sq. m) as determined by ASTM C 1363 at 35 degrees Fahrenheit mean temperature. Tested specimen must include at least two engaged side joints.

2.04 METAL ROOF PANEL ACCESSORIES

A. General: Provide complete metal panel assemblies incorporating trim, copings, fascia, gutters and downspouts, and miscellaneous flashings. Provide required fasteners, closure strips, and sealants as indicated in manufacturer's written instructions.

B. Flashing and Trim: Match material, thickness, and finish of metal panel face sheet.

C. Panel Fasteners: Self-tapping screws and other acceptable fasteners recommended by metal panel manufacturer. Provide corrosion-resistant fasteners with heads matching color of metal panels by means of factory-applied coating, with weathertight resilient washers.

D. Joint Sealers: Provide Tape Mastic Sealants and Concealed Joint Sealants.

E. **Roof Accessories**: Approved by metal panel manufacturer.

F. **Snow Guards**: Compatible with standing seam roof and approved by metal panel manufacturer.

2.05 FABRICATION

A. General: Provide factory fabricated and finished metal panels, trim, and accessories meeting performance requirements, indicated profiles, and structural requirements.

B. Fabricate metal panel joints configured to accept sealant tape providing weathertight seal and preventing metal-to-metal contact and minimizing noise resulting from thermal movement.

C. Sheet Metal Flashing and Trim: Fabricate flashing and trim to comply with manufacturer's written instructions, approved shop drawings, and project drawings.

2.06 FINISHES

A. Finishes, General: Prepare, pretreat, and apply coating to exposed metal surfaces to comply with coating and resin manufacturers' written instructions.

B. Exterior Face Sheet Coil-Coated Finish System

1. Silicone-Polyester Two-Coat System: 0.20 – 0.25 mil primer with 0.7 – 0.8 mil color coat.
   a) Basis of Design: Metl-Span, Silicone Polyester.

2. Fluoropolymer Two-Coat System: 0.2 – 0.3 mil primer with 0.7 - 0.8 mil 70 percent PVDF fluoropolymer color coat.
   a) Basis of Design: Metl-Span, Fluoropolymer.

C. Interior Face Sheet Coil-Coated Finish System:

1. Fluoropolymer Two-Coat System: 0.2-mil primer with 0.7 - 0.8 mil 70 percent PVDF fluoropolymer color coat
   a) Basis of Design: Metl-Span, Fluoropolymer

3.00 EXECUTION

3.01 EXAMINATION

A. Examine metal panel system substrate with Installer present. Inspect for erection tolerances and other conditions that would adversely affect installation of metal panels.

1. Inspect framing that will support insulated metal panels to determine if support components are installed as indicated on approved shop drawings and are within tolerances acceptable to metal panel manufacturer and installer. Confirm presence of acceptable framing members at recommended spacing to match installation requirements of metal panels.

2. Panel Support Tolerances: Confirm that metal panel supports are within tolerances acceptable to metal panel manufacturer but not greater than the following:

   a) 1/4 inch in 20 foot in any direction.

B. Correct out-of-tolerance work and other deficient conditions prior to proceeding with insulated metal panel installation.

3.02 METAL PANEL INSTALLATION

A. Standing Seamed, Concealed-Fastener Insulated Metal Panels: Install metal panel system in accordance with manufacturer's written instructions, approved shop drawings, and project drawings. Install metal panels in orientation, sizes, and locations indicated. Anchor panels and other components securely in place. Provide for thermal and structural movement.

B. Attach panels to metal framing using clips, fasteners, and sealants recommended for application by metal panel manufacturer.

1. Fasten metal panels to supports with fasteners at each location indicated on approved shop drawings, at spacing and with fasteners recommended by manufacturer.
2. Cut panels in field where required using manufacturer's recommended methods.
3. Provide weatherproof jacks for pipe and conduit penetrating metal panels.
4. Dissimilar Materials: Where elements of metal panel system will come into contact with dissimilar materials, treat faces and edges in contact with dissimilar materials as recommended by metal panel manufacturer.

C. Attach panel flashing trim pieces to supports using recommended fasteners and joint sealers.

D. Joint Sealers: Install tape sealers and liquid sealants where indicated and where required for weatherproof performance of metal panel assemblies.

1. Seal panel side and perimeter joints using joint sealers indicated in manufacturer's instructions.
2. Seal roof panel joints utilizing tape sealer and vapor seal bead of non-curing butyl.

3.03 ACCESSORY INSTALLATION

A. General: Install metal panel accessories with positive anchorage to building and weathertight mounting; provide for thermal expansion. Coordinate installation with flashings and other components.

1. Install components required for a complete metal panel assembly, including trim, copings, flashings, sealants, closure strips, and similar items.

2. Comply with details of assemblies utilized to establish compliance with performance requirements and manufacturer's written installation instructions.

3. Set units true to line and level as indicated. Install work with laps, joints, and seams that will be permanently weather resistant.

3.04 FIELD QUALITY CONTROL

3.05 CLEANING AND PROTECTION

A. Remove temporary protective films immediately in accordance with metal panel manufacturer's instructions. Clean finished surfaces as recommended by metal panel manufacturer.

B. Replace damaged panels and accessories that cannot be repaired to the satisfaction of the Architect.

END OF SECTION 074116

Intentionally Blank

DIVISION 7: THERMAL AND MOISTURE PROTECTION

SECTION 079000 - JOINT FILLERS AND SEALANTS

1.00 GENERAL

1.01 DESCRIPTION OF WORK:

A. The extent of each type of joint sealer is indicated on the drawings.

B. The required applications include, but are not necessarily limited to, the following:

1. Sidewalk and slab joints.
2. Miscellaneous concrete construction joints.
3. Floor joints.
4. Slab and deck joints.
5. Equipment and isolation joints.
6. Gasketing for assembly of components.

1.02 SUBMITTALS:

A. Manufacturer's Data, Joint Sealers: For information only, submit two copies of manufacturer's specifications, recommendations, and installation instructions for each type of material required. Include manufacturer's published data, or letter of certification, or certified test laboratory report indicating that each material complies with the requirements and is intended generally for the applications shown. Show by transmittal that one copy of each recommendation and instruction has been distributed to the Installer.

B. Sampler, Joint Sealers, Joint Filler and Gaskets: Furnish upon request three 12" long samples of each color required for each type of joint sealer exposed to view. Install sample between two strips of material similar to or representative of typical surfaces where sealer will be used, held apart to represent typical joint widths. Samples will be reviewed by Engineer for color and texture only. Compliance with all other requirements is the exclusive responsibility of the Contractor.

C. Guarantee, Joint Sealers: Submit two copies of written guarantee agreeing to repair or replace joint sealers which fail to perform as air-tight and water-tight joints; or fail in joint adhesion, cohesion, abrasion resistance, weather resistance, extrusion resistance, migration resistance, stain resistance, or general durability; or appear to deteriorate in any other manner not clearly specified by submitted manufacturer's data as an inherent quality of the material for the exposure indicated.

D. Provide guarantee signed by the Installer and Contractor. The guarantee period is two years.

2.00 PRODUCTS

2.01 GENERAL:

A. Colors: For exposed materials provide color as indicated or, if not indicated, as selected by Engineer from manufacturer's standard colors. For concealed materials, provide the natural color which has the best overall performance characteristics.

B. Hardness: As recommended by manufacturer for application shown, unless otherwise indicated.

C. Modulus of Elasticity: Provide the lowest available modulus of elasticity, which is consistent with exposure to weathering, indentation, vandalism, abrasion, support of loading, and other requirements.

D. Compatibility: Before purchase of each required material, confirm its compatibility with adjoining materials it will be exposed to in the joint system.

E. Size and Shape: As shown or, if not shown, as recommended by the manufacturer for the type and condition of joint, and for the indicated joint performance or movement.

F. Grade of Sealant: For each application, provide the grade of sealant, (non-sag, self-leveling, no-track, knife grade, preformed, etc.) as recommended by the manufacturer for the particular condition of installation (location, joint shape, ambient temperature, and similar conditions), to achieve the best possible overall performance. Grades specified herein are for normal condition of installation.

2.02 ELASTOMERIC SEALANTS:

A. Two-Component Polysulfide Sealant: Polysulfide-based, 2-part elastomeric sealant, complying with FS-TT-S-00227, Class A, Type 2 (non-sag) unless Type 1 recommended by manufacturer for the application shown.

2.03 BITUMINOUS SEALANTS:

A. Rubberized Bituminous Compound, Highway Use, Cold: Cold-applied bituminous compound with rubberizing substances, complying with FS SS-S-158 (liquid) or with FS SS-S-159 (mastic), recommended by the manufacturer for the service indicated.

B. Bituminous Caulking Compound: Manufacturer's standard, non-sag, bituminous, general-purpose caulking compound, containing mineral fiber filler.

2.04 JOINT FILLERS:

A. Bituminous and Fiber Joint Filler: Provide resilient and nonextruding type premolded bituminous impregnated fiberboard units complying with ASTM D 1751, FS HH-F-341, Type I and AASHO M 213.

2.05 GASKETS:

A. Molded Neoprene Gasket: Provide extruded neoprene gaskets complying with ASTM D 2000, designation 2BC 415 to 3BC 620, black, of 40 to 60 Shore A durometer hardness; of the profile shown or, if not shown, as required by the joint shape, size and movement characteristics to maintain a watertight and airtight seal.

2.06 MISCELLANEOUS MATERIALS:

A. Joint Primer/Sealer: Provide the type of joint primer/sealer recommended by the sealant manufacturer for the joint surfaces to be primed or sealed.

B. Bond Breaker Tape: Polyethylene tape or other plastic tape as recommended by the sealant manufacturer to be applied to sealant-contact surfaces where bond to the substrate or joint filler must be avoided for proper performance of sealant. Provide self-adhesive tape wherever applicable.

C. Sealant Backer Rod: Compressible rod stock of polyethylene foam, polyethylene jacketed polyurethane foam, butyl rubber foam, neoprene foam or other flexible, permanent, durable non-absorptive material as recommended for compatibility with sealant by the sealant manufacturer.

3.00 CONSTRUCTION REQUIREMENTS

3.01 JOB CONDITIONS:

A. The Installer must examine the joint surfaces and backing, and their anchorage to the structure, and the conditions in which the joint sealer work is to be performed, for conditions detrimental to the proper and timely completion of the work and performance of the sealers. Do not proceed with the joint sealer work until unsatisfactory conditions have been corrected in an acceptable manner.

B. Weather Conditions: Do not proceed with installation of sealants under adverse weather conditions, or when temperatures are below or above manufacturer's recommended limitations for installation. Proceed with the work only when forecasted weather conditions are favorable for proper cure and development of high early bond strength. Wherever joint width is affected by ambient temperature variations, install

elastomeric sealants only when temperatures are in the lower third of manufacturer's recommended installation temperature range.

3.02 INSTALLATION:

A. Manufacturer's Instructions: Comply with manufacturer's printed instructions except where more stringent requirements are shown or specified, and except where manufacturer's technical representative directs otherwise.

B. Joint Preparation:

1. Clean joint surfaces immediately before installation of sealant or caulking compound. Remove dirt, insecure coatings, moisture and other substances which would interfere with bond of sealant or caulking compound. Etch concrete and masonry joint surfaces as recommended by sealant manufacturer. Roughen viterous or glazed joint surfaces as recommended by sealant manufacturer.

2. Prime or seal the joint surfaces wherever shown or recommended by the sealant manufacturer. Do not allow primer/sealer to spill or migrate into adjoining surfaces.

C. Installation:

1. Set joint filler units at proper depth or position in the joint to coordinate with other work, including the installation of bond breakers, back rods and sealants. Do not leave voids or gaps between the ends of joint filler units.

2. Install sealant backer rod for liquid elastomeric sealants, except where shown to be omitted or recommended to be omitted by sealant manufacturer for the application shown.

3. Install bond breaker tape wherever shown and wherever required by manufacturer's recommendations to ensure that elastomeric sealants will perform properly.

4. Employ only proven installation techniques, which will ensure that sealants will be deposited in uniform, continuous ribbons without gaps or air packets, with complete "wetting" of the joint bond surfaces equally on opposite sides. Except as otherwise indicated, fill sealant rabbet to a slightly concave surface, slightly below adjoining surfaces. Where horizontal joints are between a horizontal surface and vertical surface, fill joint to form a slight cove, so that joint will not trap moisture and dirt.

5. Install sealants to depths as shown or, if not shown, as recommended by the sealant manufacturer but within the following general limitations, measured at the center (thin) section of the bead:

D. For sidewalks, floor slabs, and similar joints sealed with elastomeric sealants and subject to traffic and other abrasion and indentation exposures, fill joints to a depth equal to 75% of joint width, but neither more than 5/8" deep nor less that 3/8" deep.

E. For normal moving joints sealed with elastomeric sealants but not subject to traffic, fill joints to a depth equal to 50% of joint width, but neither more than 1/2" deep or less than 1/4" deep.

F. For joints sealed with non-elastomeric sealants and caulking compounds, fill joints to a depth in the range of 75% to 125% of joint width.

1. Spillage: Do not allow sealants or compounds to overflow or spill onto adjoining surfaces, or to migrate into the voids of adjoining surfaces. Clean the adjoining surfaces by whatever means may be necessary to eliminate evidence of spillage.

2. Do not overhead hot-applied sealants.

3. Recess exposed edges of gaskets and joint fillers slightly behind adjoining surfaces, unless

otherwise shown, so that compressed units will not protrude from the joint.

4. Bond ends of gaskets together with adhesive or by other means as recommended by the manufacturer to ensure continuous watertight and airtight performance. Miter-cut and bond ends at corners unless molded corner units are provided.

G. Cure and Protection: Cure sealants and caulking compounds in compliance with manufacturer's instructions and recommendations, to obtain high early bond strength, internal cohesive strength and surface durability. The Contractor shall be aware of procedures required for the cure and protection of joint sealers during the construction period, so that they will be without deterioration or damage (other than normal wear and weathering) at the time of Owner's acceptance.

END OF SECTION 079000

DIVISION 8 - OPENINGS

SECTION 081100 - METAL DOORS, FRAMES AND HARDWARE

1.00 GENERAL

A. The contractor shall furnish all labor, materials and equipment necessary to complete the work under this door and frame section as shown on the drawings or as specified herein.

1.01 HOLLOW METAL DOORS & FRAMES

A. Standards: In addition to other specified requirements, comply with Steel Door Institute "Recommended Specifications for Standard Steel Doors and Frames" (SDI-100), for the following classifications:

1. Hollow Metal Doors: SDI-100, Grade III, extra heavy-duty, Model 2, minimum 16 gage faces, Exterior Doors - Insulated and Galvanized.

1.02 SUBMITTALS

A. With manufacturer's standard details and specifications for steel doors and frames, submit shop drawings showing application to project, as required.

2.00 PRODUCTS

A. Manufacturer: One of the following or approved equal:

1. Steelcraft
2. Allied Steel Products, Inc.
3. Amweld/Dic. American Welding & Mfg. Co.
4. Ceco Corp.
5. Curries Mfg., Inc.
6. Dittco Products Div.
7. Fenestra Corp.
8. Mesker Industries, Inc.
9. Pioneer Builders, Products Corp./Sub. Republic Steel

B. Materials: Steel doors and frames; hot-rolled, pickled and oiled per ASTM A 569 and A 568; cold-rolled per ASTM A 366 and A 568.

C. Anchors and Accessories: Manufacturer's standard units. Use galvanized items for units built into exterior walls, complying with ASTM A 153.

D. Fabrication: Fabricate units to be rigid, neat in appearance, and free from defects, warp or buckle. Weld exposed joints continuously, grind, dress and make smooth, flush and invisible.

1. Prepare steel doors and frames to receive mortised and concealed finish hardware, including cutouts, reinforcing, drilling and tapping, complying with ANSI A 115 "Specifications for Door and Frame Preparation for Hardware".

   a) Reinforce units to receive surface-applied finish hardware to be field applied.

   b) Locate finish hardware as indicated or, if not indicated, per DHI "Recommended Locations for Builder's Hardware."

2. Shop paint exposed surfaces of doors and frame units, including galvanized surfaces using manufacturer's standard baked-on rust inhibitive primer.

E. Doors: Comply with SDI-100, of the types and styles indicated, for materials, quality, metal gages and construction details.

2.01 HOLLOW METAL FRAMES

A. Comply with SDI-100, of the types and styles indicated, for materials, quality, metal gages and construction details.

1. Provide standard hollow metal frames for doors, transoms, sidelights, borrowed lights, and other openings as indicated.

2. Prepare frames to receive 2 silencers on strike jamb of single-swing frames and on heads of double-swing frames.

3. Provide 26-gage steel plaster guards or mortar boxes, welded to frame, at back of hardware cutouts where installed in concrete, masonry or plaster openings.

4. Protect inside faces of frames in plaster or masonry wall construction which are placed with anti-freeze additives, using high-build fibered asphalt emulsion coating.

2.02 FINISH HARDWARE

A. Provide separate keys for each lock and master key. Provide 2 keys each.

3.00 <u>EXECUTION</u>

3.01 INSPECTION

A. Installer must examine door frames and verify that frames are correct type and have been installed as required for proper hanging of corresponding door and notify Contractor in writing of conditions detrimental to proper and timely installation of doors. Do not proceed with installation until unsatisfactory conditions have been corrected in a manner acceptable to Installer.

3.02 INSTALLATION

A. Condition doors to average prevailing humidity in installation area prior to hanging.

1. Job Fit Doors: Align doors to frame for proper fit and uniform clearance at each edge and machine for hardware. Seal cut surfaces after fitting and machining. Bevel non-rated doors 1/8” in 2” at lock and hinge edges. Bevel fire-rated doors 1/8" in 2" at lock edge.

3.03 ADJUST AND CLEAN

A. Re-hang or replace doors which do not swing or operate freely, as directed by Engineer.

1. Finished Doors: Re-finish or replace doors damaged during installation, as directed by Engineer.

2. Protection and Completed Work: Advise Contractor of proper procedures required for protection of installed doors from damage or deterioration until acceptance of work.

3.04 GENERAL INSTRUCTIONS

A. Hardware mounting heights: Door and Hardware Institute's "Recommended Locations for Builder's Hardware for Custom Steel Doors and Frames", except as otherwise indicated.

B. Install each hardware item to comply with manufacturer's instructions and recommendations.

C. Set thresholds for exterior doors in full bed of butyl-rubber or polyisobutylene mastic sealant. Remove excess sealant and clean adjacent surfaces.

D. Hardware adjustment: Return to project one month after Owner's occupancy, and adjust hardware to proper operation and function. Instruct Owner's personnel in proper maintenance and adjustment.

END OF SECTION 081100

Intentionally Blank

DIVISION 9 - FINISHES

SECTION 099000 - PAINTS AND COATINGS

1.00 GENERAL

1.01 DESCRIPTION OF WORK

A. The work covered by this section consists of furnishing all materials, accessories, equipment, tools, transportation, and performing all operation incidental to the execution and completion of all painting and finishing in accordance with this section of the specifications and applicable drawings and subject to the terms and conditions of the Contract.

B. Painting or finishing includes surface preparation, priming, finish painting, inspection, cleaning, touch-up of surfaces and equipment, in addition to shop priming and surface treatment specified elsewhere.

C. Concealed surfaces are not required to be painted unless otherwise specified.

D. The work includes painting and finishing of interior and exterior exposed items and surfaces throughout the project, except as otherwise indicated.

E. "Paint", as used herein, means all coating systems materials, including primers, emulsions, enamels, stains, sealers and fillers, and other applied materials whether used as prime, intermediate or finish coats.

F. Paint all exposed surfaces except where the natural finish of the material is specifically noted as a surface not to be painted. Where items or surfaces are not specifically mentioned, paint these the same as adjacent similar materials or areas.

G. If color or finish is not designated, the Engineer will select these from standard colors available for the material system specified.

1.02 SURFACES TO BE PAINTED (UNLESS OTHERWISE SPECIFIED)

A. All exposed outer well casing.

B. Well House access doors.

C. All new exposed mechanical and process equipment and piping not specified to have galvanized, aluminum, or stainless steel finish.

D. All new structural and miscellaneous steel not specified to have galvanized, aluminum or stainless steel finish.

E. Ferrous metal items not galvanized, including structural and miscellaneous steel, ductwork, conduit, piping, hangers, supports, valves, motors, etc., above suspended ceilings shall be given one coat of prime paint or spot primed, as required.

F. All piping and equipment in well house and valve pits.

1.03 PAINTING NOT INCLUDED

A. The following categories of work are not included as part of the field-applied finish work, or are included in other sections of these specifications:

1. Shop Priming: Unless otherwise specified, shop priming of ferrous metal items is included under the various sections for structural steel, miscellaneous metal, hollow metal work, and similar items. Also, for fabricated components such as wood casework and shop-fabricated or factory-built mechanical and electrical equipment or accessories.

2. Pre-Finished Items: Unless otherwise indicated, do not include painting when factory-finishing or installer-finishing is specified for such items as, but not limited to, acoustic materials, finished mechanical and electrical equipment, including light fixtures, switchgear and distribution cabinets, doors and equipment.

3. Concealed Surfaces: Unless otherwise indicated, painting is not required on surfaces such as walls or ceilings in concealed areas and generally inaccessible areas, foundation spaces, furred areas and pipe spaces. All steel piping above ceilings shall be painted.

4. Finished Metal Surfaces: Metal surfaces of anodized aluminum, stainless steel, chromium plate, copper, bronze and similar finished materials will not require finish painting unless otherwise indicated.

5. Operating Parts and Labels:

   a) Moving parts of operating units, mechanical and electrical parts, such as valve and damper operators, linkages, sinkages, sensing devices, motor and fan shafts will not require finish painting, unless otherwise indicated.

   b) Do not paint over any code-requiring labels, such as Underwriter's Laboratories and Factory Mutual, or any equipment identification, performance rating, name or nomenclature plates.

6. Surfaces not to be Painted: Buried piping, aluminum, stainless steel; galvanized (unless indicated); glass, plastics, prefinished hardware and treated wood surfaces.

1.04 QUALITY ASSURANCE

A. General:

1. All materials shall be delivered in sealed original containers bearing manufacturer's label specifying the quality, grade and description of the contents.

2. The object of these specifications is to provide the material and workmanship necessary to produce a first-class job. Painting shall be done at such times as the Contractor and Engineer may agree upon in order that dust-free and neat work can be obtained. All painting shall be done strictly in accordance with the manufacturer's instructions and shall be performed in a manner satisfactory to the Engineer.

B. Applicable Standards: Steel Structures Painting Council (SSPC) Surface Preparation Specification and the National Association of Corrosion Engineers (NACE).

C. Materials:

1. All materials specified herein are manufactured by the Tnemec Co., Inc., North Kansas City, Missouri, (unless otherwise indicated) or approved equal, and are approved for use on this project.

2. Materials specified are those that have been evaluated for the specific service. Products of the Tnemec Co. are listed to establish a standard of quality. Equivalent material of other manufacturers may be substituted on written approval of the Engineer.

D. Test Equipment: Contractor to provide and maintain the following equipment on the jobsite for testing of paint and coating films, testing to be done under the observance and approval of the Inspector.

1. Wet Mil Gauge: For checking of wet film thickness to determine approximate dry film of each coat.

2. Dry Mil Gauge: For testing of total film thickness of total coats or dry film thickness of single coat of primer or finish coat. Used only on ferrous surfaces. Gauge type: Mikrotect or Elcometer.

1.05 SUBMITTALS

A. Color Samples: Submit five sets of manufacturer's standard color samples for each type of paint required for color selection.

B. Manufacturer's Data - Painting: Submit manufacturer's technical information including descriptive information and application instructions for each material proposed for use.

1.06 DELIVERY AND STORAGE

A. Deliver all material to the job site in original new and unopened packages and containers bearing manufacturer's name and label, and the following information:

1. Name or title of material.

2. Federal specification number, if applicable.

3. Manufacturer's stock number and date of manufacture.

4. Manufacturer's name.

5. Contents by volume, for major pigment and vehicle constituents.

6. Thinning instructions.

7. Application instructions.

8. Color name and number.

1.07 JOB CONDITIONS

A. Apply water base paints only when the temperature of surfaces to be painted and the surrounding air temperatures are between 50 degrees F and 90 degrees F, unless otherwise permitted by the paint manufacturer's printed instructions.

B. Apply solvent-thinned paints only when the temperature of surfaces to be painted and the surrounding air temperatures are between 50 degrees F and 95 degrees F, unless otherwise permitted by the paint manufacturer's printed instructions.

C. Do not apply paint in snow, rain, fog or mist; or when the relative humidity exceeds 85%; or to damp or wet surfaces; unless otherwise permitted by the paint manufacturer's printed instructions.

D. Painting may be continued during inclement weather only if the areas and surfaces to be painted are enclosed and heated within the temperature limits specified by the paint manufacturer during application and drying periods.

1.08 PROTECTION

A. Protect the work as required by the Engineer.

B. Cover or otherwise protect work of other trades, surfaces not being painted, and surfaces not to receive paint. Provide "wet paint" signs to protect newly painted surfaces. Remove and dispose of all protective materials when appropriate.

C. Provide necessary masking materials and protective covers where feasible. Remove all paint droppings and spots from adjacent and finished surfaces.

D. Maintain paint storage and working areas in a clean, safe, and orderly condition. Maintain storage and working areas well-ventilated and free of rags and trash accumulation.

E. Temporarily remove, mask, or otherwise protect finish hardware, machined surfaces, grills, prefinished equipment and lighting fixtures as required. Protect mechanical and electrical equipment such as

nameplates, gauges, switches, relays and motors. Protect polished, finished and moving parts from damage by sandblasting and other surface preparation.

F. Prevent paint and paint overspray from entering openings in mechanical and electrical equipment.

2.00 PRODUCTS

2.01 GENERAL

A. Materials furnished for each coating system must be products of a single manufacturer and compatible to the substrate. When shoppainted surfaces are to be coated, ascertain whether finish materials will be compatible with shop coating. Inform Engineer of any unsuitable substrate or coating conditions. Start of work by applicator will signify acceptance of surface to be painted.

B. Colors and finishes shall be as selected by the Engineer.

C. Color Pigments: Pure non-fading, applicable types to suit the substrates and service indicated.

D. Paint Coordination: Provide finish coats which are compatible with prime paints used. Review other sections of these specifications in which prime paints are to be provided to ensure compatibility of total coatings system for various substrates. Upon request from other trades, furnish information on characteristics of finish materials proposed for use, to ensure compatible prime coats are used. Provide barrier coats over incompatible primers or remove and reprime as required. Notify the Engineer in writing of any anticipated problems using specific coating systems with substrates primed by others.

2.02 MATERIAL QUALITY

A. Provide the best quality grade of the various types of coatings as regularly manufactured by acceptable paint material manufacturers. Materials not displaying the manufacturer's identification as a standard, best-grade product will not be acceptable.

B. Provide undercoat paint produced by the same manufacturer as the finish coats. Use only thinners approved by the paint manufacturer, and use only within recommended limits.

2.03 PAINTING SYSTEMS

A. Proprietary names used to designate colors or materials in the following painting system descriptions are not intended to imply that products of named manufacturers are required to the exclusion of equivalent products by other manufacturers.

1. System C-1: All concrete floor surfaces of the new building not specified to be painted, or covered.

   a) Cementuff Series 204 manufactured by Tnemec Company, or an approved equal.

   b) Finish: Clear.

   c) Apply two (2) coats per manufacturer's recommendations.

2. System C-2: Concrete wall surfaces above grade - Exterior:

   a) Description of Surfaces: All new exterior concrete and masonry wall surfaces above grade.

   b) Shop Coating: N/A.

   c) Surface Preparation: Same as System C-1 and per manufacturer's recommendations.

   d) System Type: Modified Waterborne Acrylic Elastomer.

   e) Finish: Flat.

f) Field Spot Coat: N/A.

g) First Field Coat: Tnemec 610 (color), Prime-lastic, 4.0-8.0 mils dry film thickness, or approved equal.

h) Second Field Coat: Same as first coat.

3. System M-1: Metals, Exterior, Non-Immersion, Severe:

a) Description of Surfaces: Structural and miscellaneous metals, including doors, frames, equipment, motors, piping, valves, electrical boxes and conduits, excluding aluminum, specified galvanized surfaces and stainless steel.

b) Shop Coat: Tnemec 66-1255 Epoxoline Primer, 3.0-5.0 mils dry film, or approved equal.

c) Surface Preparation: SSPC-SP6, Commercial Blast Cleaning.

d) System Type: Aliphatic Polyester Polyurethane.

e) Finish: Semi-gloss.

f) Field Spot Coat: Same as shop coat. If previously painted apply a barrier coat of Tnemec Series 50-330 Poly-ura-prime at 2.0 - 3.0 miles dry film thickness, or approved equal.

g) First Field Coat: Tnemec 66-Color Hi-Build Epoxoline, 4.0 - 6.0 mils dry film, or approved equal.

h) Second Field Coat: Tnemec 1075-Color Endura-Shield II, 2.0 - 3.0 mils dry film.

4. System M-2: Metals - Interior, Non-Immersion, Severe:

a) Description of Surfaces: All interior structural steel and miscellaneous metals, including doors, frames, electrical conduit and boxes, equipment, steel piping, valves, etc., excluding aluminum, stainless steel, galvanized duct.

b) Shop Coat: Tnemec 66-1255 Epoxoline Primer, 3.0 - 5.0 mils dry film, or approved equal.

c) Surface Preparation: SSPC-SP6 Commercial Blast Cleaning.

d) System Type: Aliphatic Polyester Polyurethane.

e) Finish: Semi-gloss (doors and frames) - Gloss (all others).

f) Field Spot Coat: Same as shop coat. If previously painted, apply a barrier coat of Tnemec Series 50-330 Poly-ura-prime at 2.0 - 3.0 mils dry film thickness, or approved equal.

g) First Field Coat: Tnemec 66-Color Hi-Build Epoxoline, 4.0 - 6.0 mils dry film, or approved equal.

h) Second Field Coat: Tnemec 1075-Color (semi-gloss) or Tnemec 1074-Color (gloss), Endura-Shield II, 2.0 - 3.0 mils dry film, or approved equal.

5. System M-3: Metals - Interior/Exterior, Immersion:

a) Description of Surfaces: Totally or partially submerged metal work, including equipment, steel and ductile iron piping, valves, etc., excluding aluminum and stainless steel.

b) Shop Coat: Tnemec 20-1255 Pot-A-Pox, 4.0 - 6.0 mils dry film, or approved equal.

c) Surface Preparation: SSPC-SP10 Near-White Metal Blast.

d) System Type: High Build Polyamide Epoxy.

e) Finish: Satin.

f) Field Spot Coat: Surface preparation SSPC-SP10 and spot same as shop coat.

g) First Field Coat: Tnemec 20-AA90 Pot-A-Pox, 4.0 - 6.0 mils dry film thickness, or approved equal.

6. System M-4: Metals, Ductile Iron Pipe Interior/Exterior, Non-Immersion

a) Description of Surfaces: Ductile iron piping and flanges varnish coated not submerged.

b) Shop Coat: Standard Black Varnish.

c) Surface Preparation: SSPC-SP1 Solvent Clean.

d) System Type: Aliphatic Polyester Polyurethane.

e) Finish: Semi-Gloss.

f) First Field Coat: Tnemec Series 66-1255 Hi-Build Epoxoline Primer, 3.0 - 5.0 mils Dry Film Thickness, or approved equal.

g) Second Field Coat: Tnemec Series 66 (color) 3.0 - 5.0 mils Dry Film Thickness, or approved equal.

h) Third Field Coat: Tnemec Series 1075 (color) Endura-Shield II, 2.0 - 3.0 mils Dry Film Thickness, or approved equal.

2.04 PIPING COLOR CODE

A. To facilitate identification of process and chemical piping, the following piping color scheme shall be utilized:

Waterlines	**Color**	**Tnemec Color**
Raw	Olive	110GN Clover
Settled or Clarified	Aqua	10GN Aqua Sky
Finished or Potable	Dark Blue	11SF Safety Blue

Chemical Lines	**Color**	**Tnemec Color**
Alum or Primary Coagulant	Orange	04SF Safety Orange
Ammonia	White	11WH White
Carbon Slurry	Black	35GR Black
Caustic	Yellow w/Green Band	09SF Safety Green & 02SF Safety Yellow
Chlorine (Gas & Solution)	Yellow	02SF Safety Yellow
Fluoride	Light Blue w/Red Band	25BL Fountain Blue & 06SF Safety Red
Lime Slurry	Light Green	38GN Margarita
Ozone	Yellow w/Orange Band	02SF Safety Yellow & 04SF Safety Orange
Phosphate Compounds	Light Green w/Red Band	38GN Margarita & 06SF Safety Red
Polymers or Coagulant Aids	Orange w/Green Band	04SF Safety Orange &09SF Safety Green
Potassium Permanganate	Violet	14SF Safety Purple
Soda Ash	Light Green w/Orange Band	38GN Margarita

		& 04SF Safety Orange
Sulfuric Acid	Yellow w/Red Band	02SF Safety Yellow & 06SF Safety Red
Sulfur Dioxide	Light Green w/Yellow Band	38GN Margarita & 02SF Safety Yellow

Waste Lines	**Color**	**Tnemec Color**
Backwash Waste	Light Brown	68BR Twine
Sludge	Dark Brown	84BR Weathered Bark
Sewer (Sanitary or Other)	Dark Gray	47GR No 2 Pencil
Other	**Color**	**Tnemec Color**
Compressed Air	Dark Green	91GN Balsm
Gas	Red	28RD Monterrey Red
Other Lines	Light Gray	32GR Light Gray
Electric Conduits	Orange	04SF Safety Orange

B. In situations where two (2) colors do not have sufficient contrast to easily differentiate between them, a six (6) inch band of contrasting color should be on one (1) of the pipes at approximately thirty (30) inch intervals. The name of the liquid or gas should also be on the pipe. In some cases, it is also advantageous to provide arrows indicating the direction of flow.

2.05 EXPOSED CONCRETE SURFACES

A. All exposed non-building concrete surfaces shall receive the following:

1. Two coats Thoroseal mixed with Acryl 60, or accepted equal, 2 lbs. per square yard each coat for a total of 4 lbs. per sq. yd. coverage. Follow manufacturer’s recommendation for application and treatment once Thoroseal has hardened.

2. Thoroseal is not manufactured by Tnemec Company.

3.00 EXECUTION

3.01 GENERAL

A. Apply all coatings in accordance with manufacturer's application requirements relating to primers, surface preparation, mixing, spreading rates, thinning, surface temperature, application equipment, curing times, clean-up and safety precautions.

B. Do not apply finish in areas where dust is being generated.

C. Do not proceed with surface preparation or coating application until conditions are suitable. All adjacent areas, equipment, etc., shall be masked, covered or protected to prevent any paint, coating, cleaning particles, or spillage, splashing and overspray from resting or adhering to any surface other than area prepared for protective covering.

D. On metal surfaces, each coat of paint shall be applied at the rate specified by the manufacturer to achieve the minimum dry mil thickness required. On concrete and/or masonry, application rates will vary according to surface texture. However, in no case shall the manufacturer's stated coverage rate be exceeded. On porous surfaces, a protective and decorative finish shall be achieved. Deficiencies in film thickness hall be corrected by the application of an additional coat(s) of paint. Where conditions are other than normal because of the weather or because painting must be done in confined spaces, longer drying times will be necessary. Additional costs of paint shall not be applied, nor shall units be returned to service until paints are thoroughly dry.

E. Where thinning is necessary, only the products of the manufacturer furnishing the paint, and for the particular purpose, shall be allowed, and all such thinning shall be done strictly in accordance with the manufacturer's instructions, as well as with the full knowledge and approval of the Engineer. Where two or more coats are specified, first coat shall be tinted a minimum of three shades lighter than the color specified,

and progressively to the final coat and subject to approval.

F. Comply with recommendation of product manufacturer for drying time between succeeding coats.

3.02 INSPECTION

A. Examine surfaces scheduled to receive paint and finish coatings for conditions that will adversely affect the execution, permanence and quality of work. Do not proceed with surface preparation or coating application until conditions are suitable.

3.03 SURFACE PREPARATION

A. All surfaces shall be prepared in accordance with manufacturer's recommended guidelines for the surface, exposure and conditions and material system used, or as specified herein, whichever is more stringent.

B. If any surface to be finished cannot be put in proper condition by customary cleaning operations, notify Engineer immediately in writing or assume responsibility for any resulting unsatisfactory finish.

C. All surfaces shall be prepared in a workmanlike manner and shall be smooth, clean and dry:

1. Metal: Rust, dust and scale shall be removed. Where sandblasting is specified, the paint shall be applied within the same day as sandblasting operation. All metal work supplied, unless otherwise specified, shall be primed in shop. All metal surfaces received at jobsite without prime coat that was to be primed shall be field sandblasted before application of primer.

2. Concrete surfaces shall be cleaned of dust, free from oil, curing compounds, and other foreign matter prior to painting. Concrete floor surfaces to be painted shall be etched with 10-20% solution of muriatic acid to obtain a texture equivalent to 100 grit (medium) sandpaper.

3. Wood surfaces shall be thoroughly cleaned and free of all foreign matter, cracks, nail holes, etc., properly filled and smoothed. Wood trim shall be sandpapered to fine finish and cleaned of dust.

4. Metal surfaces (steel doors, frames, windows, electrical equipment, etc.) specified to receive an epoxy or polyurethane paint finish shall be primed with proper prime coat in lieu of standard factory baked-on enamel finish.

D. All rusted areas due to abrasion, field welding and burning, handling and erection shall be cleaned by the proper cleaning method originally specified for such surfaces or used in factory priming of surfaces. Field welds and burns shall be cleaned and be free of welding flux, spatter and rust as well as the areas adjacent to the welded area or bead.

E. All steel surfaces for immersion service which have been primed and exposed to the sunlight for 60 days or longer shall be scarified before application of top coats.

F. All ferrous metal surfaces for immersion service with field welded areas, abraded or scoffed areas or other areas of which shop prime coat is damaged, on these such areas the surface shall be prepared in accordance with SSPC-SP10 and spot-coated with primer same as shop coat.

3.04 APPLICATION

A. Conform with manufacturer's printed recommendations.

B. Apply paint and finish coatings with brushes, rollers or spraying equipment.

1. Rate and method of application shall be as required to obtain specified dry film thickness for each coat or as recommended by the product manufacturer's literature for substrate and exposure.

2. Maintain application equipment in a clean, workable condition.

C. Vary color of successive coats slightly for identification.

D. Sand, polish and dust between each coat to remove defects visible from a distance of 5' or less. Surfaces subject to touch shall be smooth and even.

E. Apply coats smooth, uniform in color, free of brush marks, streaks, visible laps, sags or skips.

1. Use film thickness gauges to determine that required thickness of coating is being applied.

F. Do not apply additional coats until completed coat has been inspected and approved by the Engineer.

G. Finish to a clean, sharp line to adjoining dissimilar materials or colors with no overlapping or runs.

H. Refinish all of section where surface finish has been damaged or is not acceptable.

I. Back-prime all wood, exterior and interior wood trim prior to installation.

3.05 CLEANING

A. Remove spilled, dripped or splattered paint from all surfaces.

B. Maintain storage and work areas in clean, safe condition.

C. Upon completion, remove all paint materials, equipment and refuse.

END OF SECTION 099000

Intentionally Blank

DIVISION 26 – ELECTRICAL

SECTION 260000 - GENERAL ELECTRICAL REQUIREMENTS

1.00 GENERAL

A. The Contractor shall furnish all labor and materials, equipment, supplies, services, and supervision to install and place in service the electrical, electronic, and communications equipment as indicated on the Drawings and as specified herein. All labor, material and equipment not shown on drawings and not specified but necessary and incidental to provide first class and complete installation of electrical work shall be included in this contract.

B. The electrical drawings are intended to cover the layout and design of the work but should not be scaled for exact measurements. Where specific details and dimensions are not shown, the Contractor shall take measurements and make layouts as required for the proper installation of the electrical work so that interference with all other work will be avoided. The Contractor shall check all drawings and specifications for the project and shall be responsible for the installation of all electrical work.

C. The Contractor shall be responsible for coordinating electrical work with other working trades on the job. Other sections in this contract as applicable to this section of work shall be referred to.

D. The Contractor shall obtain all necessary licenses and permits from the proper authority having jurisdiction to perform the work.

E. At the completion of the project, the Contractor shall furnish three (3) complete copies of service manuals in hard-back binders for all equipment furnished and/or installed for the project.

1. The service manuals shall include, but not be limited to the following:
   a) Disconnects & Fuses
   b) Light Fixtures
   c) Service Entrance Equipment
   d) Terminal Enclosures and Connectors
   e) Wiring Devices
   f) Motor Control Centers

2. The service manuals shall include approved shop drawings and details, including manufacturer's literature on installation, maintenance, and operation of motors, motor controllers, parts list, and service bulletins of motor controller components. The contractor shall keep and save all instruction manuals, service bulletins and parts list of equipment and components installed on the jobsite, for inclusion in the O & M manuals.

F. The Contractor shall coordinate the installation of the new service with the local utility (AmerenUE). AmerenUE will supply the transformer and conductors to the transformer. The Electrical Contractor shall coordinate metering installation with the Utility. The new electric service shall be 277/480 volt, 3-phase.

2.00 PRODUCTS

3.00 EXECUTION

END OF SECTION 260000

Intentionally Blank

DIVISION 26 - ELECTRICAL

SECTION 260500 - BASIC ELECTRICAL MATERIALS & METHODS

1.00 GENERAL

1.01 SUMMARY

A. The entire set of bid documents including plans & specifications applies to this section.

1.02 DRAWINGS AND SPECIFICATIONS

A. All drawings and specifications on the project are complementary, each to all other sets, and they shall be used in combination for the execution of this work. Electrical work shown on any of the contract drawings or any section of the contract specifications, shall be considered as included in this work unless specifically excluded by inclusion in some other branch of the work. This shall include roughing-in for connections and equipment as called for or inferred. The Contractor shall check all drawings and specifications for the project and shall be responsible for the installation of all electrical work.

B. The contract drawings for electrical work are in part schematic, intended to convey the scope of work and indicate the general layout, design and arrangement. The Contractor shall follow these drawings in the layout of his work and shall consult general construction drawings, mechanical drawings and all other drawings for this project to determine all conditions affecting the electrical work. The contract drawings are not to be scaled and the Contractor shall verify spaces in which the electrical work is to be installed.

C. Where specific details and dimensions for electrical work are not shown on the drawings, the Contractor shall take measurements and make layouts as required for the proper installation of the work and coordination with all other work on the project. In case of any discrepancies between the drawings and the specifications that have not been clarified by addendum prior to bidding, it shall be assumed by the signing of the contract that the higher cost (if any difference in costs) is included in the contract price, and the Contractor shall perform the work in accordance with the drawings or with the specifications, as determined and approved by the Engineer, and no additional costs shall be allowed by the contract price.

1.03 WORK INCLUDED

A. This work shall include all plant, labor, material and equipment as required to furnish and install electrical work including demolition as shown on drawings and as hereinafter specified. Work shall also include all labor, material and equipment not shown on drawings and not specified but necessary and reasonably incidental to comply with the intent of contract to provide first class and complete installations of electrical work. Furnish and install all materials, equipment, devices, and accessories not specifically called for by item but that are necessary to provide the requirements in operation and function that is established by the design and by the equipment specified.

B. Work shall also include: (1) All hoists, scaffolds, staging, runways, and equipment required for the performance of the work; (2) All job measurements and shop layouts required for the proper installation of material and equipment included in the work; (3) All lights, guards, and signs as required by safety regulations applicable to the work; (4) The removal from the premises, as it accumulates, of all dirt and refuse resulting from the performance of the work; and (5) Modifications to existing structure, equipment and installations required in order to install new work; (6) Demolition Work.

C. Work shall include providing labor and equipment for current and voltage readings, and adjustments required on electrical equipment for testing and balancing of mechanical systems as specified elsewhere in this specification.

1.04 MATERIAL AND MANUFACTURER

A. All material and equipment shall be new except as stated otherwise; shall be of the best quality and design; shall be free from defects and imperfections and shall have markings or a nameplate identifying the manufacturer and providing sufficient reference to establish quality, size and capacity. As possible, all material and equipment of the same type shall be of the same manufacturer. Equipment shall function and perform efficiently and quietly at the required capacity without producing objectionable noise within the

occupied areas of the building; if not, the Contractor shall remedy the condition or replace the equipment at no additional cost to the contract.

1.05 SUBSTITUTIONS

A. Reference in the specifications to any article, device, product, material, fixture, equipment, form or type of construction by name, make or catalog number shall be interpreted as establishing a standard of quality and shall not be construed as limiting competition. Any article, device, product, material, fixtures, equipment, form or type of construction other than those specified may be substituted for consideration, in accordance with the preliminary matters, general conditions, and supplemental conditions as applicable unless otherwise specified.

1.06 LABOR, WORKMANSHIP AND SUPERVISION

A. All labor for the installation of material and equipment furnished under the electrical work shall be done by experienced mechanics of the proper trade and all workmanship shall be first class and incompliance with the specific requirements of drawings and specifications.

B. All material and equipment for the electrical work shall be installed under competent supervisory service furnished by the Contractor. Where necessary, this shall include the services of special technicians and operation personnel.

1.07 SAFETY REGULATIONS

A. All electrical work shall be performed in compliance with all applicable and governing safety regulations including the regulations of the Occupational and Safety Health Act. All safety lights, signs and guards required for performance of electrical work shall be the responsibility of the Contractor.

1.08 CODES, ORDINANCES, REGULATIONS AND U.L. APPROVAL

A. See General Conditions

B. Laws, codes, ordinances and regulations shall take precedent excepting only where the work called for by the drawings and specifications exceeds by quality and quantity.

C. Fixtures, appliances, equipment and materials which are subject to Underwriter's Laboratory tests shall bear such approval.

D. All work of this Division shall be installed in strict accordance with the latest addition of NFPA 70, The National Electric Code. (NEC)

1.09 CONTRACTOR'S EQUIPMENT

A. All hoists, scaffolds, staging, runways, tools, machinery and equipment required for the performance of the electrical work shall be furnished by the Contractor.

1.10 STORAGE AND PROTECTION

A. Material and equipment for the electrical work shall be protected from dirt and damage and maintained in a clean condition during the performance of the work. This shall include adequate protection from the weather if storage is outside. All parts of material and equipment that have become rusted or damaged shall be replaced or restored to an acceptable condition as approved by the Owner's Representative. This shall include factory finishes damaged during construction.

1.11 CLEANING

A. Dirt and refuse resulting from the performance of the work shall be removed from the premises as required to prevent accumulation and the Contractor shall cooperate in the maintenance of reasonably clean premises at all times.

B. Immediately prior to the final inspection, Contractor shall clean all material and equipment. Dirt, refuse and

stains shall be removed from all surfaces and damaged finishes restored to original condition.

1.12 OPERATION AND MAINTENANCE INSTRUCTION

A. This Contractor shall furnish all services as required for adequate verbal and printed instructions the Owner's operating and maintenance personnel for operation and maintenance of all equipment and systems installed under this Division. Three complete copies of service manuals in hardback binders shall be furnished at the end of the project in accordance with the General Conditions of the specifications. The manuals shall include warranties, printed operating and maintenance instructions for systems and equipment specified under this Division, all approved shop drawings, all manufacturer's printed data, parts lists control diagrams, valve schedules, parts lists, list of equipment suppliers, list of Contractors & Subcontractors, balancing reports, test reports.

B. When the work is complete and at a time designated by the Owner's Representative, the Contractor shall furnish the services of a qualified instructor to instruct Owner's operating and maintenance personnel in the operation and maintenance of the systems and equipment furnished and installed under this Division.

C. The bound copies of the operating and maintenance manuals shall be used during the verbal instructions.

1.13 MOTORS, CONTROLS, AND OTHER EQUIPMENT

A. Except as otherwise specified electrical contractor shall make one power connection to each piece of equipment, (i.e., exhaust fan, rooftop unit, chiller, pump, etc. Any parts furnished loose by mechanical contractor that require wiring to the main unit shall be wired by electrical contractor at mechanical contractors expense, and shall not be an extra cost to the owner.

B. Except as otherwise specified, the electrical work shall include receiving, installing and mounting all detached motors, switches, motor control equipment and other control devices furnished under other divisions or work. Contractor shall check all headings of specifications for equipment to be installed. Work shall include overload heater for motor starters, mountings and supports as required for all equipment, including angle frames, steel plates, bars, bolts, etc., and all conduit, wire, etc., as required to connect all equipment including motors, disconnect switches, starters, controls, pushbuttons, etc. Detached motors shall be set and aligned with coupling or drive. Motor connections shall be terminated with unexposed leads in suitable condulet and cover. Conduit shall terminate close to motor with a minimum of 12" of flexible liquid tight conduit between rigid conduit or EMT and motor.

C. Unless specified otherwise, perform all work required to rough-in and connect to all equipment requiring electrical connections. This work shall be as indicated on drawings, by approved equipment shop drawings and by direction on the job.

D. All equipment, materials or devices furnished by others including that furnished by the Owner or under any other division which require electrical connections shall be roughed-in and connected under this division, unless specified otherwise. It shall be the Contractor's responsibility to verify exact requirements for rough-in and connection of equipment furnished by others prior to installation. Extras will not be allowed for failure to verify same.

E. The Contractor shall run feeders to starters, disconnects, control panels and motors as shown on drawings, make connections, furnish overload heaters for motor starters, and install and wire all mechanical components in accordance with wiring diagrams furnished under mechanical work. The Contractor shall coordinate with any other trades involved for the proper coil voltages for control of magnetic starters and contactors.

1.14 ADJUSTING, ALIGNING AND TESTING

A. All electrical equipment furnished under this Division shall be adjusted and tested by this Contractor. Motors and other equipment furnished by others, to which electrical connections are made under this Division, shall be checked for short circuit and open circuits before energizing. Motors shall be checked for proper phasing and rotation. The thermal overload protection shall be checked in all motor starters, and any protector heaters found to be of improper size as required by the motor name plate full load amperage and voltage rating for protection of the motor shall be listed (include equipment designation, rating of heater, motor nameplate horsepower, full load amps and voltage) and 4 copies of list shall be submitted to the Owner's

Representative.

B. Mechanism of all electrical equipment shall be checked, adjusted and tested for proper operation. Protective devices and parts shall be checked and tested for specified and required application and adjusted as required. Adjustable parts of all lighting fixtures and electrical equipment shall be checked, tested and adjusted as required to produce the intended performance.

C. Completed wiring systems shall be free from short circuits and after completion, perform tests for insulation resistance in accordance with the requirements of the National Electrical Code.

D. The Contractor shall be held responsible for the operation, service and maintenance of electrical equipment during construction and prior to acceptance by the Owner. All electrical equipment shall be maintained in the best operating condition. Operational failure caused by defective material and/or labor furnished under this Division shall be immediately corrected. Owner's Representative shall be immediately notified of any operational failures caused by defective material and/or labor covered under other Divisions or furnished by others.

1.15 ELECTRICAL CIRCUITRY FOR EQUIPMENT

A. The electrical circuits, components, and controls for all equipment are selected and sized, based on the equipment as furnished. It shall be the responsibility of all parties concerned, involved in, and furnishing the substitute and/or equivalent equipment to verify and compare the electrical characteristics and requirements of that furnished to that specified and/or shown. If greater capacity or more materials or labor is required for the rough-in, circuitry or connections than for the item specified and provided for, then it shall be the responsibility of the parties involved in providing the substitute and/or equivalent items of equipment to provide all compensation for additional charges made for the proper rough-in, circuitry and connections for the equipment furnished. No additional charges shall be made to the Base Bid price or to the Owner.

B. Before rough-in of circuitry or connecting to equipment, the Contractor shall verify the electrical characteristics and requirements of the equipment being furnished, and for that specified and shown on drawings.

1.16 CLEARANCES

A. All electrical equipment shall be so installed to maintain proper clearance and headroom as required by the National Electrical Code. (NEC)

1.17 CUTTING AND PATCHING

A. The Contractor shall coordinate with the Owner's Representative before any cutting and obtain approval from the Owner's Representative prior to any cutting. All patching and finishing shall be by the Contractor.

B. Cutting shall be done with extreme care and in such a manner that the strength of the structure will not be endangered. Wherever possible, openings in concrete or masonry construction shall be by concrete saw or rotary core drill. Openings in any construction shall be cut the minimum size required for the installation of the work. Adequate protection shall be provided to prevent damage to adjacent areas and to prevent dust from spreading to adjacent areas.

C. Where openings or holes are cut in existing construction and the cutting breaks existing electrical circuitry or control circuitry conduit and wiring, then it shall be the responsibility of the Contractor to reroute the circuitry conduit and requiring and to complete the circuitry as required and as approved by the Engineers. Temporary completion shall be provided where necessary before the permanent rerouting and completion work is finished.

D. Before any cutting, patching, or finishing work is started, dust and moisture protection shall first be installed as required in these specifications.

E. Openings cut in floor shall be cut by core drilling where possible. After work is installed through any opening in floor, the opening around the work shall be patched and sealed watertight with epoxy or silicone based, non-cracking elastomeric sealant.

F. Where existing work is removed from sleeves or openings through floor and the sleeve or opening is not to be reused, patch the hole or opening by filling with shrink epoxy cement grout, in strict accordance with the grout manufacturer's instructions and recommendations and as required to make completely watertight and fireproof. Finish the floor surface as directed by the Owner's Representative.

1.18 SHOP DRAWINGS AND SAMPLES

A. Acceptance of the work shall be subject to the Engineer's approval of shop drawings, product data and samples, as specified in the "General Conditions" of these specifications.

B. Submittals shall include the manufacturer's model number, capacity, performance data, electrical characteristics, etc., all clearly shown and marked for the specific item of equipment to be furnished on this project. General catalog data that does not indicate the specifics for the item to be furnished for this project will not be accepted. Performance data shown or marked on the submittals shall be at the actual specified operating conditions for this project.

1.19 IDENTIFICATION, INSTALLATION AND USE OF ELECTRICAL EQUIPMENT

A. All electrical equipment shall be furnished with factory identification for the suitability of use and installation, either by a description marked on the equipment, permanently attached label, or printed description packed with the equipment, in accordance with article 110 of the National Electrical Code (NEC). If a printed description is packaged with the equipment, this shall be bound in the Operation and Maintenance Manuals.

1.20 NOISE AND VIBRATION

A. Contractor shall be responsible for the installation of all equipment in such a manner as to control the transmission of noise and vibration for many installed equipment or system, so the sound level shall not exceed NC35, in any occupied space. Contractor shall be responsible for the correction of any objectionable noise in any occupied area due to improperly installed equipment.

1.21 EQUIPMENT IDENTIFICATION AND LABELS

A. All electrical equipment, such as disconnect switches, motor starters, controls, push-button, panel boards, and other similar items shall be adequately identified with labels. Labels shall clearly designate name and use of equipment, and panel and circuit number or power source, Labels shall be laminated plastic with 1/4" white letters on a black background. Labels shall be attached with pop-rivets or permanent adhesive. **"Dymo" type labels not acceptable.**

1.22 WARRANTIES

A. Warranties shall be provided for all equipment in accordance with the requirements of the General Conditions, except that all warranties shall be non-prorated for one year.

B. Acceptance of the work under this Division shall be subject to the conditions that all installed systems, equipment, apparatus, and appliances included in the work shall operate and perform as designed, including code clearances, and as selected with respect to efficiency, capacity and quietness and shall operate and perform without producing objectionable noise within occupied areas of the building.

C. Acceptance of the work shall also be subject to the conditions that any time within one year after date of acceptance final payment, any defective part of the work resulting from the supply of faulty workmanship or material shall be immediately amended, required or replaced as a part of the contract work without cost to the contract.

2.00 PRODUCTS

3.00 EXECUTION

END OF SECTION 260500

Intentionally Blank

DIVISION 26 – ELECTRICAL

SECTION 260519 - WIRE, CABLE AND CONDUCTORS

1.00 GENERAL

1.01 WORK INCLUDES

A. Base Bid:

1. Electrical Contractor:

a) Provide all necessary wire and cable of the sizes and types shown on the plans or specified herein for:

(i) General power distribution and branch circuit system

(ii) Lighting systems

(iii) Control systems

(iv) Emergency power system

1.02 QUALITY ASSURANCE

A. Installation shall comply with NFPA 70 - National Electric Code (NEC).

B. Insulation types, ratings and usage shall be in accordance with National Electrical Code requirements.

C. Wire and cable shall be constructed in accordance with ICEA, NFPA, NEMA and IEEE published standards and shall be UL listed.

1.03 SUBMITTALS

A. No submittals required when using specified materials.

2.00 PRODUCTS

2.01 LOW VOLTAGE WIRE AND CABLE (600V OR LESS)

A. General

1. All conductors shall be 98% conductivity copper.

2. Unless otherwise noted, minimum wire size for lighting and power branch circuits shall be No. 12 AWG. For control and auxiliary systems the minimum size shall be No. 14 AWG.

3. Conductors for emergency power and exit wiring shall be minimum #12 AWG.

4. Insulation on power and control systems wiring 480 volts and below shall be 600 volt rated, type XHHW, THWN or THHN. Insulation of conductors for other systems shall be 600 volt unless otherwise noted.

5. Type XHHW or THWN insulation must be used for all conductors installed in wet locations. This includes all outdoor feeders and branch circuits, underground conduit runs and conduits run in slab on grade.

6. Conductors size 8 AWG and larger shall be Class B stranded. Conductors size 10 AWG and smaller may be solid or stranded. Conductors size 14 AWG for control and auxiliary systems shall be stranded.

B. Acceptable Manufacturers: Cable and wire shall be a standard type as manufactured by:

1. General Cable Company
2. Carol
3. Anaconda
4. Roma
5. ITT Royal
6. Beldon Wire and Cable
7. Approved equal

2.02 MEDIUM VOLTAGE WIRE AND CABLE (601V to 5KV)

A. The 5KV shielded cable shall be UL Type MV-90 rated 5KV at 90C in wet or dry locations with a single stranded, bare annealed copper Class B conductor. The construction shall include an extruded conductor shield, Ethylene propylene rubber (EPR) insulation, a semi-conducting tape, a copper tape shield and a PVC jacket. Cables shall be furnished in sizes as shown on the Drawings.

B. The 5KV non-shielded cable shall be UL Type MV-90 rated 5KV at 90C in wet or dry locations with a single stranded, bare annealed copper Class B conductor. The construction shall include an extruded conductor shield, Ethylene propylene rubber (EPR) insulation and a PVC jacket. Cables shall be furnished in sizes as shown on the Drawings.

C. Approved Manufacturers

a) HWC Distribution Corp.
b) Rome
c) Perilli
d) Okonite
e) Approved equal

2.03 INSTRUMENTATION AND COMMUNICATION CABLE

A. The type of instrumentation and communication cable required shall be as recommended by the instrumentation and communications system manufacturer. The 4-20 ma cables shall be Belden 9342, or approved equal.

2.04 CONNECTIONS AND SPLICES

A. 600V and Less

1. All components used at wiring terminations, connections and splices shall be UL listed.

2. Connectors for joints #10 AWG and smaller sizes to be made with spring connectors insulated with vinyl skirt and live spring. Prior to installation, wires shall be properly twisted together.

3. Connectors for #8 AWG (copper) and up to #2/0 sizes to be high-pressure type mechanical crimp connectors applied to a cleaned wire surface. Insulate splices with electrical insulating putty and tape to cover with four layers, half lapped.

4. Connections for #3/0 (copper) and larger shall be Cadwelded. Insulate splices using electrical insulating putty and tape to cover with four layers, half lapped.

B. 601V to 5KV

1. Splices shall be made with cold shrink rubber splices suitable for use with 5KV cable.

2. Connectors for splices and lugs for terminations shall be compatible with the cable and terminal, compression type rated for 5000 volts and installed per manufacturer's requirements.

C. Acceptable Manufacturers

1. Thomas and Betts

2. 3M
3. Buchanan
4. Ideal

2.05 WIRE PULLING LUBRICANT

A. Pulling lubricant shall be UL listed, water based, polymer solution. Lubricants containing waxes or soaps are not acceptable.

B. The lubricant shall be compatible with the cable insulation and shall not cause any premature deterioration of the insulation material.

C. The lubricant shall be approved by the cable manufacturer for use with their cables.

D. Acceptable Manufacturers

1. American Colloid/Poly-X
2. American Polywater/Polywater J
3. ARNCO/Hydar-Lube
4. Buchanan/Quick Slip
5. Ideal/Aqua-Gel
6. Approved equal

3.00 <u>EXECUTION</u>

3.01 INSTALLATION

A. General

1. A separate neutral, sized in accordance with the National Electrical Code shall be installed for each feeder or branch circuit.

2. Install vinyl markers to identify branch circuits where they enter panel boards, pull boxes, junction boxes and device boxes.

3. Color coding shall occur at all conductor termination points and in all junction boxes and pullboxes. Identification may be by colored insulation or colored electrical tape at the Contractor's option (See Section 16.075 - Electrical Identification).

B. Power And Branch Circuits

1. Conductor sizes as shown on the Drawings and specified herein are minimum and shall be increased as required to maintain a minimum voltage drop of 3% for any branch circuit and 5% at any point in the system. Conductor size shall be increased as required by NEC where more conductors are installed in a common raceway than indicated on the Drawings.

2. Conductors shall be color coded for their entire length in accordance with NEC; all wiring shall be color coded using the same color for each conductor within a system.

3. Wire size shall be #12 AWG minimum for branch circuit wiring.

4. Minimum size conductors for 120/208V or 277/480V shall be #12 AWG. Increase conductors at least one (1) size for home run feeders over 75 feet long or if furthest outlet is greater than 125 feet from feeder panel.

C. Control Systems

1. Control and systems wiring shall be terminated using forked tongue terminals.

2. Terminal strip connectors shall be ratchet-tooled in accordance with manufacturer’s recommendations. Plier type crip is not acceptable.

D. Provide self adhesive tape minimum 3-inch wide band on larger size conductors for color codes. Tape color shall be per conductor color codes. Tape shall be provided at all terminations in switchgear, panelboards, pull boxes, motor controllers, disconnect and starters.

E. No conductors shall be installed in rooms or areas prior to completion of medical gas piping installation.

F. All fasteners and lugs used for electrical connections shall be torqued to values indicated by manufacturer's instructions. Use particular care to equalize lug torques where parallel conductor feeders are used. Use approved lugs when copper conductor is to be connected to aluminum bus.

3.02 TESTING

A. Upon completion of cable and wire installation, but before termination to equipment, test each wire for grounds and short circuits. Replace or correct defective wiring.

END OF SECTION 260519

DIVISION 26 – ELECTRICAL

SECTION 260526 - GROUNDING

1.00 GENERAL

1.01 WORK INCLUDES

A. Base Bid

1. Electrical Contractor provide a complete grounding and bonding system as shown on the drawings and specified herein.

1.02 QUALITY ASSURANCE

A. Grounding shall be in accordance with the requirements of the 1996 edition of the National Electrical Code (NEC) or the latest revision.

2.00 PRODUCTS

A. GROUNDING

1. The grounding system shall consist of grounding electrode(s), grounding electrode conductor (GEC), equipment grounding conductor and bonding jumpers installed to effectively bond and ground all non-current carrying metal parts of all fixtures and equipment. On grounded systems, one conductor shall also be bonded to the grounding system to limit excessive voltages to ground.

   a) The grounding electrode system shall consist of at least one of the following: metal underground water pipe, concrete encased electrode, or ground ring. In addition, an electrode consisting of three (3) 5/8" diameter by ten (10) feet long copper-clad rods with top driven to a minimum depth 18-inchs below ground level and not less than 2-inches from exterior of wall.

   b) The grounding electrode conductor shall be bare solid or standard copper, sized in accordance with the NEC or as indicated on the drawings and bonded to a grounding electrode with metal fusing type connectors such as "Cadweld" or approved equivalent. Where a grounding electrode conductor is installed exposed on building surfaces or on exterior of equipment enclosures, the conductor shall be installed in rigid metal conduit.

   c) All service entrance equipment shall be grounded by connecting neutral bus to the grounding electrode with a grounding electrode conductor.

   d) The grounding bus of distribution equipment shall be bonded to the grounding electrode with a grounding electrode conductor all constructed as heretofore specified.

   e) Equipment grounding shall consist of connecting all noncurrent carrying metal parts of the wiring system to a ground source. This includes the conduit or other steel raceways, boxes and similar components as well as metal enclosures of equipment.

   f) Ground source shall be ground terminal of system grounding in main service equipment. Conduits fitted with grounding bushings shall be used as the primary grounding conductor, and shall be bonded to the ground source and to equipment with a green insulation color-coded stranded minimum size No.12 AWG copper wire.

   g) Motors shall be grounded by connecting a conductor from the motor frame to the grounding terminal on the connector for rigid to flexible conduit. Separate ground conductor, where required, shall be at least fifty percent (50%) of total copper per phase of feeder to motor with minimum size No.12 AWG wire.

h) Panelboards shall be grounded by connecting bare copper conductor to the grounding stud and to the incoming and outgoing feeder conduit grounding bushing.

i) Separate equipment grounding conductor shall be provided with each conduit run and where required by the equipment manufacturer.

j) The metal conduit for all feeder circuits and for branch circuits operating at more than 250 volts to ground, shall be bonded to the equipment enclosure with grounding locknuts and insulated throat steel grounding bushings. Where indicated on the drawings or where conduit for above circuits are installed in concentric stamped knockouts with portions of stamped rings remaining, conduit shall be bonded to equipment enclosures or groundgin bus with insulated grounding bushings with lugs and copper wire bonding jumpers.

k) All bonding jumpers shall be copper bonding, braided strap, solid or stranded wire sized in accordance with NEC and continuity of all grounding shall be as specified by the NEC.

l) Locate grounding conductors so as to permit as far as practical, the shortest and most direct path to ground clamp. Make ground connections to plant equipment as close to current carrying parts as practical. All ground connections shall have clean contact surfaces and shall be tinned and sweated while bolting. Connections shall be readily accessible for inspection.

B. MANUFACTURERS

1. Grounding clamps, straps, grounding conduit, bushings, and other grounding fittings shall be UL-approved and as manufactured by Thomas and Betts, Kearney, or approved equivalent.

3.00 <u>EXECUTION</u>

A. The Contractor shall install the grounding system in accordance with Article 250, Grounding, in the latest edition of the National Electrical Code.

END OF SECTION 260526

DIVISION 26 – ELECTRICAL

SECTION 260533 - CONDUIT, BOXES AND RACEWAYS

1.00 GENERAL

1.01 WORK INCLUDES

A. Base Bid

1. Electrical Contractor:

a) Furnish and install complete conduit and raceway systems as required for power, lighting, control and communication systems as shown in the Drawings and specified herein.

b) Furnish and install all outlet, junction and pull boxes as indicated on the Drawings and as necessary to install the required conduit and wiring in a neat and workmanlike manner, as specified herein.

1.02 QUALITY ASSURANCE

A. Pull boxes and junction boxes shall be in accordance with NEC requirements and shall be UL labeled.

B. Raceways shall meet NEMA standards and shall be UL listed and labeled.

2.00 PRODUCTS

2.01 CONDUIT

A. EMT conduit shall be installed for all work concealed in partitions or in concrete block walls and for all conduits run in ceiling plenums and exposed runs, except where noted otherwise.

B. Rigid galvanized steel conduits shall be used outdoors and in all mechanical rooms where not supported directly to walls or ceilings, and for all medium voltage cable runs.

C. PVC conduits shall be installed underground or in concrete slabs and shall be a minimum size of ¾-inch. Rigid galvanized elbows shall be used for all stub-ups through or out of concrete slabs.

D. Jacketed flexible steel conduit (Sealtite) shall be used in wet areas where flexible conduit connections are required and on all motorized equipment and motors.

E. Minimum conduit size shall be ¾-inch.

F. All conduit to be listed by Underwriter's Laboratories, Inc. All conduit shall have UL label.

G. Rigid & IMC conduit shall be heavy/intermediate wall, threaded, hot dipped galvanized steel. Each section of conduit furnished shall be free from blisters and other surface defects. Galvanizing shall not crack or flake when conduit is bent.

H. Thin wall conduit (EMT), couplings and fittings shall have a circular cross section of sufficient diameter to meet all State Codes. The wall thickness shall be uniform throughout with the interior surface free of defects. Welding of seams shall be continuous.

I. Flexible steel conduit shall be made from a continuous length of galvanized cold rolled steel strip, spirally wound. Adjacent strips shall have locked typed construction with all the edges turned in.

J. Liquid-tight flexible steel conduit shall consist of a steel core of the same construction as specified for flexible steel conduits, with an extruded PVC jacket.

K. PVC conduit shall be heavy wall, Schedule 40, UL listed under Standard 651 or extra heavy wall, Schedule 80, UL listed under Standard 651. Conduit shall be suitable for use with 90 degree C insulated wire. Conduit, fittings, and cement shall be of the same manufacturer. Schedule 80 shall be installed in aboveground installations where the conduit is exposed to impact by cars and trucks or to other physical damage (or where specifically noted on the plans).

L. Acceptable Manufacturer's

1. Pittsburgh Steel
2. Allied
3. Republic Steel
4. National Electric
5. Keystone
6. Jones and Laughlin
7. Carlon
8. Approved equal

2.02 FITTINGS

A. All fittings shall be UL Listed, insulated-throat type.

B. Couplings and connectors for thin wall conduit shall be all steel type. No die cast connectors will be allowed.

C. Expansion and deflection fittings shall be of a type suitable for the particular condition and shall be complete with bonding jumper.

D. Acceptable Manufacturer's

1. Thomas and Betts (T&B)
2. O-Z Gedney
3. Appleton
4. Raco
5. Approved equal

2.03 BOXES

A. Flush outlet, junction and pull boxes to be pressed steel galvanized, minimum 4" square and 1 1/2" depth, unless otherwise specified or shown on the Drawings. Box sizes shall be selected as required to comply with the NEC.

B. Boxes for exposed work in finished areas to be Type FS with threaded hubs and rigid conduit risers.

C. Pull boxes shall be made of code gauge galvanized steel with removable cover plates fastened with screws or hinged doors as indicated or required. Sizes shall comply with the NEC.

D. Steel boxes cast in concrete shall be designed for concrete installation.

E. Acceptable Manufacturer's

1. Appleton
2. Raco
3. Killark
4. Hoffman
5. Steel City
6. Square D
7. Thomas and Betts
8. O.Z./Gedney
9. Approved equal

2.04 ELECTRIC MANHOLES

A. All electric manholes shall be provided with a sump pump. The sump pump unit shall be Little Giant Model 6E-CIA-SFS (120 volt), or approved equal.

B. The manholes shall be provided with a hinged aluminum access hatches and flat tops.

C. Unless otherwise indicated, electric manholes shall comply with SECTION 02536 - SANITARY SEWER MANHOLES, FRAMES AND COVERS. Exfiltration and/or vacuum testing is not required.

3.00 EXECUTION

3.01 INSTALLATION

A. Conduit

1. In finished areas, conduit must be concealed above accessible ceilings, within the building structure, or within chases. Exposed conduits to be run tight to wall or ceiling and installed in a neat workmanlike manner, ready for painting.

2. All conduit shall be supported by suitable clamps or hangers attached to the elements of the building structure at the required spacing to provide rigid installation. In no case shall conduit be attached to or supported from adjoining ductwork or pipe, ceiling systems, or installed in such manner as to prevent the ready removal of other pipe for repairs.

3. Install conduit parallel or perpendicular to building lines (except where run in or below floor slabs). Keep conduit runs as close to underside of structure as possible.

4. No more than the equivalent of four (4) 90 degree bends will be allowed in any one conduit run. Where more bends are necessary in any single run, a pull box shall be installed. Pull boxes shall also be installed in long runs at a maximum separation of 100'-0".

5. Exercise necessary precautions to prevent accumulation of water, dirt, or concrete in conduits during execution of electrical work. Conduit in which water or foreign material has been permitted to accumulate shall be thoroughly cleaned, or replaced where such accumulations cannot be removed.

6. Do not run conduit in slabs under boilers, hot water heaters or other heat-producing equipment and maintain minimum 6" clearance from hot water piping.

7. Install a 240 lb. tensile strength poly pull line or a #12 THHN or THWN pull wire in all empty conduits.

8. Install expansion fittings at all locations where conduits cross building expansion joints.

9. Secure rigid conduit at cabinets and boxes using insulated throat type grounding and bonding bushings. Locknuts shall be tightened to cut through painted surfaces.

10. Where a number of conduits are to be run exposed and parallel, one with another, they shall be grouped and supported by trapeze hangers or unistrut racks tight to the building structure. Hanger rods shall be fastened to concrete ceiling slab with threaded rod in steel expansion bolt type inserts. Trapeze hangers shall be Unistrut, angle iron or channel iron. Each conduit shall be clamped to the trapeze hanger with conduit clamps.

11. Metallic conduit systems shall be grounded in accordance with the NEC, and as shown on the Drawings. Metallic conduit systems shall be metallically joined together into a continuous electrical conductor and shall be so connected to all boxes, fittings, and cabinets to provide effective electrical continuity.

12. Threaded couplings shall be used for joints on rigid metallic conduit. Field joints shall be cut square, reamed smooth to remove burrs and sharp and rough edges, and properly threaded to receive couplings. The use of running threads is not permitted.

13. Conduit systems shall be supported at each elbow and the end of every straight run terminating in a box or cabinet. Fastening shall be provided at maximum spacing of 7 ft. for horizontal runs and 8 ft. for vertical runs, unless codes require more stringent supporting. Conduit shall not be fastened to other pipe or installed to prevent ready removal of other pipe for repairs. The use of perforated strap hangers is not permitted.

14. Conduit to be buried shall be installed a minimum of 24 in. below finished grade.

15. Where telephone/data outlet locations are indicated on the Drawings, install 1” EMT from telephone outlet box and 1” conduit from data outlet box (4" x 4" x 1-1/2" or 4" x 2" x 1-1/2") to top of finished wall or a point above accessible ceiling.

B. Boxes

1. Support all boxes independently of conduit except for cast boxes connected to two (2) rigid conduits both supported within 12-inches of box.

2. Provide knockout closures of the correct size to cap unused knockout holes where blanks have been removed.

3. Outlet Boxes

   a) Flush mount outlet boxes in areas other than mechanical rooms, electrical rooms and above removable ceilings.
   b) Provide at least 6-inch separation between outlet boxes. Do not install boxes back to back in same wall unless specifically noted on the plans. If specifically noted on the plans install 2 pieces of 5/8” drywall between the boxes to maintain both fire rating and soundproofing of wall.
   c) Use multiple gang boxes where more than one device is mounted together. Do not use sectional boxes. Provide barriers to separate different voltage systems.
   d) Provide cast boxes for exterior and wet locations.

4. Junction and Pull Boxes

   a) Mount junction and pull boxes securely to building structure in a location that meets the requirements of the National Electrical Code for accessibility and work space clearance. Coordinate exact locations of work with other trades.
   b) Support independent of conduit
   c) Locate pull or junction boxes to limit conduit runs to no more than 100 linear feet (LF) or four (4) 90 degree bends between pulling points.

5. Provide covers for all boxes.

C. Motor Connections

1. The final 18 in. of connections to motors shall be made in liquid-tight flexible steel conduit.

END OF SECTION 260533

DIVISION 26 – ELECTRICAL

SECTION 260553 - ELECTRICAL IDENTIFICATION

1.00 GENERAL

1.01 WORK INCLUDES

A. Base Bid:

1. Electrical Contractor: Provide identification for all new electrical equipment as specified herein, and as needed for a complete and proper installation including, but not necessarily limited to:

   a) Panelboards
   b) Conductors and Conduit
   c) Control Boxes
   d) All other pertinent electrical devices

1.02 QUALITY ASSURANCE

A. Comply with:

1. ANSI A 13.1., Identification of Piping Systems.
2. NFPA 70 - National Electric Code (NEC)

1.03 REFERENCES

A. American National Standards Institute (ANSI)

B. Underwriters Laboratories, Inc. (UL): All products UL listed and labeled.

C. Manufacturers' Catalogs: Specification manufacturers' catalogs are incorporated by reference to same force and effect as if repeated herein in full.

1.04 SUBMITTALS

A. Provide schedule of proposed identification plate wording for A/E approval.

2.00 PRODUCTS

2.01 EQUIPMENT IDENTIFICATION PLATES

A. Provide plates for switchgear, disconnects, panelboards and all other pertinent electrical equipment consisting of machine engraved laminated plastic. Plate field shall be black core.

1. Size of plate shall be commensurate with lettering thereon.

2. Lettering for major items of equipment, such as a switchboard, shall be 3/4" in height. Lettering for smaller items, such as switches, shall be 1/2" in height.

3. Wording on plate shall contain the following information as appropriate and approved by the Engineer.

   a) Drawing nomenclature.
   b) Equipment served.
   c) Voltage.

B. Acceptable Manufacturers:

1. Quentin D. Schwab, 606 E. Dodson Dr., Urbana, IL 61801.
2. Joe Halm Building Specialties, Box 525, LaGrange, IL.

3. Mechanical Tag Systems, Box 1565, Cedar Rapids, IA 52406.
4. Seton Name Plate Corp., 592 Boulevard, New Haven, CT 06505.
5. N & E Specialty Co., Box 3518, Peoria, IL 61614.
6. Artistic Engravers, Box 1385, Peoria, IL 61654.
7. Approved equal.

2.02 WIRING SYSTEM IDENTIFICATION

A. Wire insulation color:

1. 277Y/480V, 3 phase

a)	Phase A	-	Brown
b)	Phase B	-	Orange
c)	Phase C	-	Yellow
d)	Neutral	-	White
e)	Ground	-	Green
f)	Isolated Ground		Green with yellow stripe

2. 120Y/208V, 3 phase

a)	Phase A	-	Black
b)	Phase B	-	Red
c)	Phase C	-	Blue
d)	Neutral	-	White
e)	Ground	-	Green
f)	Isolated Ground		Green with yellow stripe

B. Code all wire and cable larger than color coded sizes available from manufacturer by application of electrical plastic tape in colors specified. Apply tape in uniform manner circling wire or cable. Half-lap tape for length of cable as required by NEC. Tape shall be 3M, Plymouth or Permacel.

C. Maintain consistent coding throughout installation to ensure proper phase identification.

D. Control wiring may use numbered or lettered marker tape. Record wiring so marked on project record documents. Marker tape shall be 3M Scotch Code, Panduit Insta-Code, T & B E-Z Coder, Stranco Tuff-Code, Bradypack or Electrovert.

2.03 EMERGENCY SYSTEM IDENTIFICATION

A. The emergency wiring system (if applicable) shall be installed in accordance with Section 700 (Emergency Systems) of the National Electrical Code (NFPA-70).

1. Wiring from the emergency source or emergency source overcurrent protection device to the emergency load(s) shall be independent of all other wiring systems.

2. Wire for multiple emergency circuits supplied from the same source shall be permitted in the same raceway, box, etc…

3. Emergency panels, switches, wiring, raceway, and boxes shall be labeled as such.

3.00 <u>EXECUTION</u>

3.01 INSTALLATION

A. Affix Equipment Identification Plates to equipment with stainless steel self tapping screws.

B. Apply markers or bands on all exposed conduit at 50 ft. intervals, at all junction boxes and on both sides of walls through which conduits penetrate.

END OF SECTION 260553

DIVISION 26

SECTION 260586 - WIRING METHODS

1.00 GENERAL

1.01 SUMMARY

A. The entire set of bid documents including plans & specifications applies to this section.

2.00 PRODUCTS

2.01 ACCEPTABLE MANUFACTURERS

A. Subject to compliance with requirements, provide products from one of the following manufacturers:

1. Hubbell
2. Arrow-Hart
3. General Electric
4. Sierra
5. Circle F
6. Bryant
7. Pass & Seymour

2.02 CONDUIT AND INSTALLATION

A. Rigid threaded conduit, threaded intermediate conduit and electrical metallic tubing shall be standard size of approved manufacturer and shall be galvanized or sherardized on inside and outside, including with water-tight compression fittings or with concrete-tight, pressure cast set screw type fittings. Rigid threaded conduit and threaded intermediate conduit shall be installed with threaded couplings and fittings.

B. Conduit may be electrical metallic tubing (E.M.T.), except conduit larger than 4", conduit in wet or damp locations, conduit in hazardous locations, conduit in earth or below grade, and except as otherwise noted on drawings or specified other wise. Conduit shall be minimum 3/4" dia., except switch legs and control wiring may be minimum ½” size.

C. Galvanized steel rigid or intermediate grade (I.M.C.) conduit shall be used in wet or damp locations, in NEC classified hazardous locations and for conduit sizes larger than 4" except below grade outside of building. Aluminum conduit may not be used.

D. Short sections of flexible conduit may be used from junction or outlet boxes to lighting fixtures as permitted by the National Electrical Code. Connections from outlet boxes above ceilings to fluorescent fixtures recessed in ceiling shall be made with flexible steel conduit not to exceed 6 ft. in length.

E. Short sections of flexible watertight (Sealtite) conduit shall be used for connections to motors, transformers and vibrating type equipment.

F. Unless specified or noted on drawings otherwise, conduit shall be installed concealed, excepting in areas where concealment of conduit is not possible or practicable and is approved by the Engineer. Conduits shall be installed continuous between outlets, boxes, cabinets, etc.

G. Conduits installed exposed to view (not concealed by finish) shall be run parallel and perpendicular to building lines and shall be run against the structure in a neat workmanlike manner with conduit offsets neatly formed around all structure offsets and obstructions.

H. Conduits shall be securely fastened in place with approved type hangers, clamps and supports. Conduit shall not be fastened to or supported from ductwork, piping, lay in ceiling support wires or mechanical equipment. Conduit ends shall be reamed before installation and all conduit shall be thoroughly cleaned before installation and kept clean after installation. All conduit shall be fished clean before pulling of wires. Plug ends of conduits, with temporary plugs, where conduits are open to weather and before concrete is poured to keep inside of conduit free of water and concrete.

I. Exposed conduits shall be securely fastened in place on intervals in accordance with the NEC, and hangers supports and fastenings shall be provided at each elbow, at the end of each straight run terminating at a box or cabinet, and adjacent to each outlet.

J. Horizontal and vertical conduit runs 2-1/2" and smaller may be supported by one hole malleable straps, clamp backs or devices with suitable bolts, expansion shields or beam-clamps for mounting to building structure.

K. Adjustable hangers may be used to suspend 3" or larger conduits when separately located.

L. Hangers shall be suitable for the application involved. Where excessive corrosive conditions are encountered, hanger assemblies shall be protected after fabrication by sherardizing or galvanizing, special paint or other suitable preservative methods.

M. Use of perforated iron strap, cord or wire for supporting conduits will not be permitted.

N. The required strength of the supporting equipment, size and type of anchors shall be based on the combined weight of conduit, hanger and cables.

O. Install pull wire or pull string in all unused empty conduits.

2.03 OPENINGS AND SLEEVES

A. The Contractor shall furnish and install all box-outs and sleeves for openings required to install this work. Openings through structural members shall be only as approved by the Engineer or as shown on the structural drawings. Openings through concrete walls and floors shall be core drilled. Openings through masonry walls shall be galvanized steel conduit sleeves.

2.04 ACCESS DOORS

A. Where junction boxes and equipment are installed in concealed spaces, access doors shall be installed infurring to provide for operation, service, inspection, and maintenance.

B. Access doors shall be Milcor style K, M, DW, or AT as required by construction, equivalent Zurn or Wade, flush type steel units with frames. Construction shall be of #14 gauge level stock, cadmium plated and fitted with pivot hinges and screw driver coin type lock and finished with prime coat of paint. Panels shall have a minimum size of 12" x 12" for hand holes and 18" x 18" for manholes.

C. Accessible ceilings with removable type ceiling tiles do not require access panels to be installed.

2.05 WIRES AND WIRING FOR 600 VOLT OR LESS

A. Wires and cables shall be insulated soft annealed copper conductors with 600 volt insulation unless noted or specified otherwise and shall be listed and approved by Underwriter's Laboratories and shall meet all specifications of the IPCEA and NEMA Standards. Gauge of wire shall be (AWG) gauge. No. 10 gauge and smaller shall be solid conductor or stranded conductor. No. 8 gauge and larger shall be stranded conductor, except all ground wires shall be stranded. Stranded conductors shall not be fastened directly under screw terminals that rotate against conductors (such as side screw terminals of wall switches and convenience receptacles). Wire smaller than No. 12 gauge, shall not be used unless specifically called for on drawings or in specifications. Aluminum wiring shall not be used.

B. Unless specified otherwise, 600 volt wires in general use shall be type "THHN".

C. Grounding wires shall be stranded copper with 75 degrees C. "THHN" insulation with green color or green tracer. Every branch & feeder conduit shall contain a code sized green insulated ground conductor.

D. Wire insulation shall be color coded as follows:

<u>120/208 VOLT</u>
Phase A - Black

Phase B - Red
Phase C - Blue
Neutral - White
Ground - Green

277/480 VOLT
Phase A - Yellow
Phase B - Brown
Phase C - Orange
Neutral – White with blue stripe
Ground - Green

E. Control and indication wiring shall be #14 AWG type "THHN", except runs greater than 200 feet in length shall be #12 AWG unless noted otherwise on drawings.

F. Conductors used where low leakage type is required, such as for ground fault protected circuits, the insulation shall be type "XHHW".

G. All wires shall be run in conduit or surface raceway shall be continuous between outlets and boxes. At least 8" of wire shall be left at outlets for fixture connections.

H. All terminations and splices shall be made in accordance with proper methods and recommendations for the type of wire and devices used and as recommended by the manufacturers of material and equipment involved.

I. Splice and Terminal Materials: Splices for 600 volt conductors smaller than No. 8 AWG shall utilize twist type insulated spring connectors. Terminals or splices for stranded conductors No. 8 AWG and larger shall utilize indent, hex screw, or bolt clamp-type connectors, with or without tongue, properly taped, and approved for the particular application. Exposed splice connector device shall be insulated with a minimum of two half-lapped layers of specification grade rubber insulating type and a minimum of two half lapped layers of polyvinyl chloride electrical tape applied over the rubber tape. The polyvinyl chloride type shall extend a minimum of two cable diameters over the cable jacket. For cable size 250 MCM and larger, connectors shall have at least two clamping elements or compression indents, and shall have at least two clamping elements or compression indents, and shall have provision for at least two bolts for joining to apparatus terminals. All wire and cable connectors shall be of high conductivity corrosion resistant material and have actual contact area equal at least to the current carrying capacity of the wire or cable.

J. Crimping Hand Tools used in securing the conductor in the compression type connectors or terminal lugs shall be those made for the purpose and for the conductor sizes involved. The crimping tools shall be of the ratchet type which prevents the tool for opening until the crimp action is completed. Such tools shall be a product of the connector manufacturer.

K. Insulating Compounds and Tapes for splice and termination insulation shall be of a type approved by the cable manufacturer for the particular use, lo cation, and voltage.

L. Where wire size is shown on drawings or specified it shall be the same size throughout the circuit.

2.06 OUTLET BOXES, JUNCTION BOXES, PULL BOXES AND LOCATION OF OUTLETS.

A. Outlet boxes shall be installed for all electrical service outlets, including plug receptacles, lamp receptacles, lighting fixtures, switches, etc. Boxes for concealed work shall be size 4" code gauge steel knockout boxes, galvanized or sherardized and of required depth for services and devices. Boxes installed for concealed work shall have code gauge galvanized raised plaster rings set to plaster ground or markers with outside edge flush with plaster or wall finish. Plaster rings shall be selected with proper opening for device installed in box. Thru-wall type box will not be permitted. Outlet boxes in unplastered concrete block walls in finished rooms shall be masonry type and shall be set to line with wall joints.

B. Boxes for exposed work, where permitted or approved, shall be 4" square or 4" long by 2-1/8" wide standard utility boxes specifically designed for surface installation and as required by device, wiring, and number of conduits and all covers for devices and blank covers shall be stamped steel with turned down edges to fit with sides of box.

C. Pull and junction boxes shall be code gauge galvanized steel boxes of size shown or required and with bolted or screwed covers. Boxes shall be flush or surface mounted as shown or required and shall be finished with factory prime coat of paint.

D. All rigid threaded and intermediate threaded conduit shall be clamped to boxes and enclosures with bushing inside of box and locknut outside of box. Bushings and locknuts shall be galvanized malleable iron. EMT shall be clamped to boxes and enclosures with fittings designed for EMT connections to boxes, and the fittings shall be tightly secured to the EMT and shall be clamped to box with locknut inside of box. Open end of fitting inside of box shall be smooth to prevent damage to conductor insulation when pulling conductors.

E. Location of outlets on drawings is approximate and, except where dimensions are shown, exact location of outlets shall be as taken from plans and details on general drawings or as directed by the Engineer. Outlets shall be located generally from column centers and finished wall lines or to center of acoustical and decorative ceiling panels and to centers of joints of wall panels. Outlets shall be installed in accessible location and no outlets shall be installed above ducts, behind furring or other obstructions. Outlets below ducts shall be connected with extension connections to outlets in ceiling or slab above.

F. Switch outlets, convenience receptacle outlets and telephone outlets, unless shown otherwise or required otherwise by wainscots, counters, etc., shall be mounted at height as specified under the device heading in this specification. Each device shall be carefully aligned to center vertically on other devices that are installed in the same vicinity

2.07 LIGHTING CONTROL SWITCHES

A. Occupancy Sensor Switches - Leviton #6768, 180 VA flourescent, 120 V, equal by Lutron, Hubbell, Arrow Hart, GE.

B. General use wall switches unless specified otherwise, shall be specification grade, quiet operating for A.C. inductive loads and with side screw terminals, and back wiring screw-clamp type terminals. Stranded conductors shall not be directly terminated under side screw terminals that rotate against the conductors. Groups of switches shall be installed under one-piece plate. Switches, where indicated on drawings, shall be key operated type; all others shall be toggle handle type. Switches shall be mounted with centerline 3'-10" above floor unless otherwise noted on drawings. Color as selected by Engineer (Basis of design is Hubbell)

Single Pole	#1221-GRY	20 amp - 120/277 volts
Three Way	#1223-GRY	20 amp - 120/277 volts
Momentary	#1556-GRY	15 amp - 120/277 volts

position, 2 circuit, single pole, double throw.

2.08 RECEPTACLES

A. Receptacles, unless specified or shown otherwise, shall 3 wire grounding type, NEMA configuration 5-20R, duplex receptacle rated 20 amps @ 125 volts. Receptacles shall have automatic grounding clip on receptacle mounting ear and shall have side screw terminals and back-wiring screw-clamp type terminals including grounding terminal. Stranded conductors shall not be mounted directly under binding screws without clamp-type terminals. Receptacles shall be mounted in wall with centerline 12" above finished floor unless noted otherwise on drawings or unless required to be higher by counters, wainscots, etc. (Basis of design is Hubbell #5362.)

B. Special receptacles shall be as required for load served.

2.09 DEVICE PLATES AND BLANK PLATES

A. Wall plates for switches and receptacles in flush wall boxes shall be .040" thick beveled-edge, satin-finished stainless steel. Plates for devices in exposed boxes shall be stamped steel with turned down edges to fit side of box.

B. Blank plates on boxes in finished spaces shall be stainless steel or brass as specified to match receptacle and switch plates. Blank plates on flush boxes in unfinished spaces, shall be flat galvanized steel. Plates for surface mounted boxes shall be galvanized stamped steel with turned down edges to fit side of box.

3.00 EXECUTION

3.01 ROUGH-IN

A. Verify final locations for rough-ins with field measurements and with the requirements of the actual equipment to be connected.

B. Refer to equipment specifications for rough-in requirements.

3.02 GENERAL

A. Sequence, coordinate and integrate the various elements of electrical systems, materials, and equipment. Comply with the following requirements:

1. Coordinate electrical systems, equipment, and materials installation with other building components.
2. Verify all dimensions by field measurements.
3. Arrange for chases, slots, and openings in other building components during progress of construction, to allow for electrical installations.
4. Coordinate the installation of required supporting devices and sleeves to be set in poured-in-place concrete and other structural components, as they are constructed.
5. Sequence, coordinate, and integrate installations of electrical materials and equipment for efficient flow of the Work. Give particular attention to large equipment requiring positioning prior to closing in the building.
6. Where mounting heights are not detailed or dimensioned, install systems, materials, and equipment to provide the maximum headroom possible.
7. Coordinate connection of electrical systems with exterior underground and overhead utilities and services. Comply with requirements of governing regulations, franchised service companies, and controlling agencies. Provide required connection for each service.
8. Install systems, materials, and equipment to conform with reviewed submittal data, including coordination drawings, to greatest extent possible. Conform to arrangements indicated by the Contract Documents, recognizing that portions of the Work are shown only in diagrammatic form. Where coordination requirements conflict with individual system requirements, refer conflict to the Engineer.
9. Install systems, materials, and equipment level and plumb, parallel and perpendicular to other building systems and components, where installed exposed in finished spaces.
10. Install electrical equipment to facilitate servicing, maintenance, and repair or replacement of equipment components. As much as practical, connect equipment for ease of disconnecting, with minimum of interference with other installations.
11. Install systems, materials, and equipment giving right-of-way priority to systems required to be installed at a specified slope.
12. Install electrical equipment in order to maintain required clearances. Where space limitations mandate that equipment (i.e. water piping) may contribute moisture within these clearances, provide non-combustible shielding to protect electrical equipment from moisture.

3.03 ELECTRICAL CONNECTIONS TO MECHANICAL EQUIPMENT

A. Electrical: Conform to applicable requirements in Division 16 Sections.

B. Grounding: Ground equipment. Tighten electrical connectors and terminals, including grounding connections, according to manufacturer's published torque tightening valves. Where manufacturer's torque valves are not indicated, use those specified in UL 486A and UL 486B.

C. Obtain all mechanical equipment control wiring diagrams from mechanical contractor so as to allow installation of field-installed control wiring in conduit between any mechanical equipment and accessories. This electrical contractor shall provide all control wiring in conduit under the supervision of the SCADA System contractor. All accessories will be mounted by the contractor providing that accessory. Control wiring includes all accessories operating at 110-volts or above and 50 volts or below.

D. Provide all power connections to mechanical equipment as indicated on drawings or outlined in Division 16 Sections.

END OF SECTION 260586

DIVISION 26 – ELECTRICAL

SECTION 260800 - WIRING DEVICES

1.00 GENERAL

1.01 WORK INCLUDES

A. Base Bid:

1. Electrical Contractor

   a) Furnish and install complete wiring devices and coverplates as shown or implied on the Contract Documents.

   b) Provide receptacle ampacity and electrode configuration to accommodate equipment to be served.

1.02 QUALITY ASSURANCE

A. Wiring Devices shall be UL listed and labeled.

B. Wiring Devices shall be in accordance with NEC, NFPA, and NEMA standards.

1.03 SUBMITTALS

A. Submit product literature in accordance with Division 1 for the following:

1. Wiring devices and Plates
2. Time Switches
3. Photo Electric Controls

2.00 PRODUCTS

2.01 GENERAL

A. Grounding type devices shall meet all requirements set forth by the NEC and/or State Codes.

B. Unless noted otherwise, all wiring devices shall be specification grade.

2.02 RECEPTACLES

A. Receptacles shall be polarized, 3-wire, grounding type with bronze contacts. Standard duplex receptacles shall be rated 20 Amp, 120 V, with parallel slots and two ground terminals. Screw terminals arranged for back or side wiring. Weatherproof duplex receptacles shall have stainless steel or die cast aluminum plates with a double cover. Special purpose receptacles shall be of the capacity and design indicated on the Drawings. All receptacles on emergency power system shall be red with red cover plate.

B. Ground fault circuit interrupting (GFCI) receptacles shall be duplex 20 Amp, 120 V, duplex with test and reset buttons.

C. Acceptable Manufacturer's

1. Eagle
2. Hubbell
3. Leviton
4. Bryant
5. Approved equal

2.03 SWITCHES

A. Snap switches shall be furnished with screw terminals for looped or back wiring and shall be white in color and of the quiet, toggle type. Switches shall be rated at 20 Amp, 120 V. Switches shall be SPST, DPST, 3 or 4 way as required and/or indicated on the Drawings. Where more than one switch is shown at a location, switches shall be installed under a gang plate.

B. Acceptable Manufacturer's

1. Eagle
2. Hubbell
3. Leviton
4. Bryant
5. Approved equal

2.04 COVER PLATES

A. Indoors: Cover plates shall be high-strength, scratch-resistant, smooth nylon, white in color.

B. Outdoors: Cover plates shall be stainless steel or die cast aluminum. Plates of non-ferrous metal shall be not less than 0.04 in. thick; those of ferrous metal shall be not less than 0.03 in. thick.

C. Acceptable Manufacturer's

1. Eagle
2. Leviton
3. Hubbell
4. Bryant
5. Approved equal

3.00 <u>EXECUTION</u>

3.01 GENERAL INSTALLATION

A. Boxes and devices shall be mounted vertically and securely fastened. Plates for exposed outlets shall square galvanized covers, raised 1/2" with edges flush with top of box. Mount switches in multi-gang boxes wherever several devices are grouped together.

B. Unless otherwise noted on the drawings, all snap switches shall be installed 45 in. above the floor level and general use outlets shall be 15 in. above the floor level. All dimensions refer to the centerline of the box.

C. Boxes and devices located in a brick veneer wall shall be mounted horizontally in the brick course.

D. Grounding duplex receptacles shall be installed with the grounding electrode terminal in the top or up position.

END OF SECTION 260800

DIVISION 26 – ELECTRICAL

SECTION 262600 - ELECTRICAL UTILITY SERVICES

1.00 GENERAL

A. The Contractor shall furnish all labor and materials, equipment, supplies, services, testing and supervision to install and place in operational service the electrical components at the lift station site.

B. Applicable Sections: 311000 Site Clearing; 312300 Excavating Filling and Grading; 312500 Sedimentation and Erosion Control; and 329000 Fertilizing, Seeding and Mulching.

1.01 SERVICE PEDESTAL

A. The work shall include furnishing and installing the electrical service pedestal including setting 3" diameter rigid metal conduit posts, filled with concrete, attaching stainless steel unistrut with stainless steel hardware. Mounting and wiring the meter base, generator disconnect, utility service disconnect, and automatic transfer switch. Installing the three (3) ground rods with proper wire. Installing conduit and conductors of proper size to meet national electrical code and equipment manufacturers requirements.

B. All outside electric panels shall be NEMA 3R or NEMA 4.

C. The electrical drawings are intended to cover the layout and design of the work but should not be scaled for exact measurements. Where specific details and dimensions are not shown, the Contractor shall take measurements and make layouts as required for the proper installation of the electrical work so that interference with all other work will be avoided. The Contractor shall check all drawings and specifications for the project and shall be responsible for the installation of all electrical work.

D. The Contractor shall be responsible for coordinating electrical work with other working trades on the job. Other sections in this contract as applicable to this section of work shall be referred to.

E. The Contractor shall obtain all necessary licenses and permits from the proper authority having jurisdiction to perform the work.

F. At the completion of the project, the Contractor shall furnish three (3) complete copies of service manuals in hard-back binders for all equipment furnished and/or installed for the project.

1. The service manuals shall include, but not be limited to the following:

   a) Disconnects & Fuses
   b) Light Fixtures
   c) Service Entrance Equipment
   d) Terminal Enclosures and Connectors
   e) Wiring Devices
   f) Automatic Transfer Switch (If required noted on plans)

2. The service manuals shall include approved shop drawings and details, including manufacturer's literature on installation, maintenance, and operation of motors, motor controllers, parts list, and service bulletins of motor controller components. The contractor shall keep and save all instruction manuals, service bulletins and parts list of equipment and components installed on the jobsite, for inclusion in the O & M manuals.

1.02 CONTROL PANEL

A. The general contractor shall furnish and install the lift station control panel including setting 3" diameter rigid metal conduit posts, filled with concrete, attaching stainless steel unistrut with stainless steel hardware, mounting the control panel and junction boxes, installing ground rod and wire and installing conduit and conductors of the proper size required by the equipment manufacturer.

B. Conduits from the lift station wet well to the control panel shall be sealed in the bottom entrance to the junction box and the bottom entrance to the control panel, to prevent passage of condensate or vapors. The mastic used to seal the conduits shall be Appleton Duxseal Weatherproof Compound, General Electric silicone sealant or approved equal.

1.03 DUSK TO DAWN LIGHT

A. The mercury vapor dawn to dusk light shall be a Luma Pro 175 watt, photocell controlled, suitable for external use.

B. It shall be mounted on a thirty (30) foot high, round, tapered aluminum anchor base pole with a six (6) foot arm. The pole shall be capable of withstanding winds of a minimum 90 miles per hour. The pole shall be a Cooper Lighting (RTA7L30 AA S16) or approved equal.

C. The base for the dawn to dusk light pole shall be a two (2) foot diameter by seven (7) foot deep reinforced concrete base five (5) foot buried and two (2) foot above grade, as shown on the drawings.

1.04 SHOP DRAWINGS

A. Shop drawings shall be submitted in accordance with the General Conditions. This data shall include accurate dimensions of all components, JIC Standard Schematic wiring diagrams, physical layout wiring diagrams of factory wired components and complete bill of materials and description of operation for special components. All connection for wiring to external devices shall be clearly shown and wires numbered to correspond to the wire numbers as installed.

2.00 PRODUCTS

3.00 EXECUTION

END OF SECTION 262600

DIVISION 27: CONNECTORS

SECTION 271323 - OPTICAL FIBER COMMUNICATIONS TRANSMISSION AND DISTRIBUTION CONNECTOR

1.00 GENERAL

1.01 SCOPE

A. Furnish and install all splice connector work required for this project.

1.02 SUBMITTALS

A. Shop drawings shall be submitted on all manufactured and fabricated items outlined. Shop drawings shall be submitted per the specification requirements as stated in Division 1.

B. Submit shop drawings showing location, sizes of metal, method of assembly, hardware, fasteners, anchorage, connection with other work and provisions for accommodating work of other trades.

C. Submit manufacturer's data indicating compliance with the particular requirements of these specifications and with the contract drawings.

D. Submit samples required by these specifications.

2.00 PRODUCTS

2.01 SPLICE CONNECTOR

A. General Requirements: The FOSC-450 or equal is a single-ended, environmentally sealed enclosure for fiber management in the outside plant network.

B. FOSC-450's cable or equal sealing terminations use gel-sealing technology instead of heat shrink. The FOSC-450 or equal features a single wrap-around gel seal with four or six cable ports. The single seal slides easily into the closure's base for rapid, secure installation. Gel-seal cable terminations automatically adjust to cable size and shape, and require no special tools or accessories to install. It is easy to remove cables, and gel seal is completely re-usable.

C. The FOSC 450 A4 or equal closure is the smallest in the FOSC 450 or equal series having four large round ports. It is intended for low fiber-count cable splices and "tap-off" splices. The FOSC 450 A4 or equal closure comes ready to store expressed loose buffer tubes. An optical slack storage basket is available for expressed stranded fiber and ribbon fiber.

D. Compressed gel cable sealing type

E. Closure Sealing Type – Dome to base clamp with o-ring

F. Impact resistant polymer construction

G. IEC 61300, 5m waterhead,

H. Below ground/buried

3.00 EXECUTION

3.01 PREPARATION

A. Surface Preparation: Prepare surfaces using the methods recommended by the manufacturer for achieving the best result for the substrate under the project conditions.

3.02 INSTALLATION

A. Install all products in this section following the product manufacturer's published installation and application manuals and guidelines.

3.03 FIELD QUALITY CONTROL

A. Testing Agency: Owner may engage a qualified testing agency to perform tests and inspections.
   1. Inspections: Fiber optic cables, accessories, and installation are subject to inspection for compliance with requirements and photograph documentation of conditions to be concealed by subsequent Work.

B. Tests: As determined by Owner's testing agency from among the following tests:
   1. Optical Fiber Cabling Components: Test in accordance with ANSI/TIA 568.3-D.
   2. Optical Power Loss: Test in accordance with ANSI/TIA-526-14-C.

C. Fiber optic splice will be considered defective if it does not pass tests and inspections.

3.04 PROTECTION

A. Protect installed products until substantial completion, replace damaged materials and retest.

END OF SECTION 271323

DIVISION 27: HDPE HANDHOLD

SECTION 271324 - OPTICAL FIBER COMMUNICATIONS TRANSMISSION AND DISTRIBUTION HDPE HANDHOLD

1.00 GENERAL

1.01 SCOPE

A. Furnish and install all HDPE handholds work required for this project.

1.02 SUBMITTALS

A. Shop drawings shall be submitted on all manufactured and fabricated items outlined. Shop drawings shall be submitted per the specification requirements as stated in Division 1.

B. Submit shop drawings showing location, sizes of metal, method of assembly, hardware, fasteners, anchorage, connection with other work and provisions for accommodating work of other trades.

C. Submit manufacturer's data indicating compliance with the particular requirements of these specifications and with the contract drawings.

D. Submit samples required by these specifications.

2.00 PRODUCTS

2.01 HDPE HANDHOLD

A. General Requirements: The BULK 4 by Channell or equal is a HDPE enclosure for fiber management in the outside plant network.

B. The dimensions are 24” x 36” by 36” deep.

C. BULK 4 has a straight wall design for improved lid load strength and has ribbed sidewall secures body into backfill soil and eliminates sidewall deflection.

D. Provides a lid that meets AASHTO M-306-10 H 20 loading.

E. Ductile iron cover and Ring

F. Shall include marker locator device

2.02 HDPE HANDHOLD - BURIED

A. General Requirements: The BULK 0 by Channell or equal is a HDPE enclosure for fiber management in the outside plant network.

B. The dimensions are 24” x 12” by 12” deep.

C. BULK 0 has a straight wall design for improved lid load strength and has ribbed sidewall secures body into backfill soil and eliminates sidewall deflection.

D. Provides a lid.

E. Ductile iron cover and Ring

3.00 EXECUTION

3.01 INSTALLATION

A. Shall be buried flush with the ground

B. Install all products in this section following the product manufacturer's published installation and application manuals and guidelines.

3.02 PROTECTION

A. Protect installed products until substantial completion, replace damaged materials.

END OF SECTION 271324

DIVISION 31 - EARTHWORK

SECTION 311000 - SITE CLEARING

1.00 GENERAL

1.01 DESCRIPTION OF WORK

A. The extent of this section shall cover all site clearing performed prior to or during any part of construction, and all final clearing necessary to insure proper drainage and prevent unsightly or unsafe conditions.

B. The work shall include, but not be limited to, the following:

1. Protection of existing trees designated to remain.

2. Clearing and grubbing.

3. Removal of existing fence.

4. Removal of all unsuitable material from public and private property resulting from construction operations.

C. Applicable sections: 312300 Excavating, Filling and Grading.

1.02 JOB CONDITIONS

A. Protection of Existing Improvements:

1. Extreme care shall be taken to protect all improvements on adjoining properties, and on public and private property. Damaged improvements shall be restored to their original condition, as acceptable to the parties having jurisdiction.

2. Precautionary measures shall be taken to prevent damage to existing improvements to remain in place on or near the new construction.

B. Protection of Existing Trees:

1. Existing trees indicated to remain in place shall be protected by temporary guards to avoid unnecessary cutting, breaking or skinning of roots, skinning and bruising of bark, smothering resulting from stockpiling construction or excavation materials within the drip line, excess foot or vehicular traffic, and vehicular parking within the drip line. Trees damaged by construction operations shall be repaired by specialized personnel, in a manner acceptable to the Engineer. Trees which cannot be repaired and restored to full growth status, as determined by such specialized personnel, shall be replaced at the Contractor's expense.

2. Trees to remain within the limits of the contract work shall be properly cared for to maintain their health during the course of construction operations.

3. Cut roots faces over 1 1/2" in diameter shall be coated with an emulsified asphalt or other acceptable coating formulated for use on damaged plant tissues. Exposed roots shall be temporarily covered with wet burlap to prevent drying. Roots shall be covered with earth as soon as possible.

C. Salvageable Improvements: Items indicated to be salvaged shall be carefully removed and stored on the Owner's premises as directed by the Owner.

2.00 PRODUCTS

A. NOT APPLICABLE

3.00 EXECUTION

3.01 GENERAL

A. Improvements, vegetation, stumps, roots or obstructions interfering with the installation of new construction shall be removed and disposed of as specified in Section 312300 Excavating, Filling, and Grading.

B. Roots and branches of trees obstructing new construction shall be carefully and cleanly cut.

3.02 CLEARING AND GRUBBING

A. The site shall be cleared of trees, shrubs, and other vegetation interfering with construction, except where any of the above is to remain in place. Stumps, roots and other debris protruding through the ground surface shall be completely removed. Hand methods only shall be used for grubbing inside the drip line of trees remaining in place.

B. Depressions caused by clearing and grubbing operations shall be filled with satisfactory soil material unless further excavation or earthwork is scheduled.

C. When construction is on private easement, the width of clearing shall be field determined by the Owner, with the maximum width being the width of the easement.

3.03 DISPOSAL OF WASTE MATERIALS

A. Transport and dispose all trash, debris, trees, stumps, roots, ashes, cinders, or other refuse to areas as acceptable to the Owner.

END OF SECTION 311000

DIVISION 31 – EARTHWORK

SECTION 311200 - OBSTRUCTION REMOVAL / REPLACEMENT

1.00 GENERAL

1.01 RELATED DOCUMENTS

A. Drawings and general provisions of the Contract, including General and Special Conditions and Division 01 Specification Sections, apply to this Section.

1.02 SUMMARY

A. The Contractor shall furnish all the materials, labor and equipment to install and replace any obstructions along the corridor of the finished water transmission main.

B. Related sections include the following:

1. 311000 Site Clearing and Grubbing
2. 311313 Tree Removal
3. 312300 Excavating, Filling and Grading

1.03 SUBMITTALS

A. Product Data: Include the following:

1. Affidavits of compliance with referenced standards and codes.
2. A list of all deviations from drawings and specifications.

B. Shop Drawings: NOT APPLICABLE

C. Field Test Reports – NOT APPLICABLE

1.04 QUALITY ASSURANCE

A. The Contract Documents represent the minimum acceptable standards for materials specified in this section on this project. All materials shall conform fully in every respect to the requirements of the respective parts and sections of the drawings and specifications. If not named, the material which is a "standard product" with that manufacturer shall be modified, redesigned from the standard mode and shall be furnished with special features, accessories, materials of construction or finishes as may be necessary to conform to the quality mandated by the technical and performance requirements of the specification.

B. Reference Standards: Comply with all applicable provisions and recommendations of the following, except as otherwise shown or specified.

1. Occupational Safety and Health Act (OSHA)
2. American Society of Testing and Materials (ASTM)
3. American Society of Civil Engineers (ASCE)
4. American National Standards Institute (ANSI)

1.05 DELIVERY, STORAGE, AND HANDLING

A. N/A

1.06 PROJECT CONDITIONS

A. Existing Utilities: Do not interrupt utilities serving facilities occupied by Owner or others unless permitted under the following conditions and then only after arranging to provide temporary utility services according to requirements indicated:

1. Notify Engineer not less than two days in advance of proposed utility interruptions.
2. Do not proceed with utility interruptions without Engineer's written permission.
3. Do not proceed with utility interruptions without owner of the utility's written permission.

1.08 COORDINATION

A. Coordinate Work on this section with interfacing and adjoining Work for proper sequencing of each installation.

2.01 PRODUCTS

A. N/A

3.00 EXECUTION

3.01 GENERAL

A. The Contractor shall remove and replace fences in the way of construction unless land owner or easement disallow such removal. Payment for this work shall be included in the unit price bid for Fence – Removal and Replacement.

B. The contractor shall remove and replace woven wire and barbed wire fences in kind and to the satisfaction of the land owner as necessary. This item of work consists of furnishing all materials, labor, and equipment to repair / reinstall existing galvanized woven wire type and barbed wire type fence, including wood post and steel post, and all other related items. Final repair or replacement shall meet the satisfaction of the property owner.

C. Removal of trees less than 6-inches in diameter and shrubs will not be paid for as tree removal, but will be considered an obstruction and incidental to the contract.

END OF SECTION 311200

DIVISION 31 – EARTHWORK

SECTION 311313 - TREE REMOVAL

1.00 GENERAL

1.01 RELATED DOCUMENTS

A. Drawings and general provisions of the Contract, including General and Special Conditions and Division 1 Specification Sections, apply to this Section.

1.02 SUMMARY

A. The Contractor shall furnish, install and place in satisfactory operating condition the equipment and appurtenances as shown on the drawings and described in the specifications.

B. This section covers tree removal including:

1. Removal of trees larger than 6” in diameter, measured 3’ above the ground.

C. Related sections include the following:

1. 311000 Site Clearing and Grubbing

1.03 SUBMITTALS

A. Product Data: Include the following:

1. Affidavits of compliance with referenced standards and codes.
2. A list of all deviations from drawings and specifications.

B. Shop Drawings: NOT APPLICABLE

C. Field Test Reports – NOT APPLICABLE

1.04 QUALITY ASSURANCE

A. The Contract Documents represent the minimum acceptable standards for materials specified in this section on this project. All materials shall conform fully in every respect to the requirements of the respective parts and sections of the drawings and specifications. If not named, the material which is a "standard product" with that manufacturer shall be modified, redesigned from the standard mode and shall be furnished with special features, accessories, materials of construction or finishes as may be necessary to conform to the quality mandated by the technical and performance requirements of the specification.

B. Reference Standards: Comply with all applicable provisions and recommendations of the following, except as otherwise shown or specified.

1. Occupational Safety and Health Act (OSHA)
2. American Society of Testing and Materials (ASTM)
3. American Society of Civil Engineers (ASCE)
4. American National Standards Institute (ANSI)

1.05 DELIVERY, STORAGE, AND HANDLING

A. NOT APPLICABLE

1.06 PROJECT CONDITIONS

A. Existing Utilities: Do not interrupt utilities serving facilities occupied by Owner or others unless permitted under the following conditions and then only after arranging to provide temporary utility services according to requirements indicated:

1. Notify Engineer not less than two days in advance of proposed utility interruptions.
2. Do not proceed with utility interruptions without Engineer's written permission.

1.08 COORDINATION

A. Coordinate Work on this section with interfacing and adjoining Work for proper sequencing of each installation.

2.00 PRODUCTS

A. NOT APPLICABLE

3.00 EXECUTION

3.01 GENERAL

A. The Contractor shall remove all trees greater than 6-inches diameter. Removal shall include the removal of the stump and root system to a level one (1) foot below finish grade.

B. Removal of trees and shrubs within easement that is an obstruction shall be incidental and included in the contract bid price for finished watermain installation.

C. Contractor shall remove and dispose of trees properly, and open burning will not be allowed.

END OF SECTION 311313

DIVISION 31 - EARTHWORK

SECTION 312213 - LINEAR GRADING

1.00 GENERAL

1.01 DESCRIPTION OF WORK

A. This work shall consist of grading work necessary to bring the entrance roads to the required grade and cross section within reasonable tolerances. It shall also include the following:

1. Construction of all inlet and outlet ditches and ditch blocks within the linear grading limits unless otherwise provided for in the contract.

2. Construction of entrances and approaches.

3. Breaking up and satisfactory removal or incorporation into the roadway of all gravel, macadam or bituminous surfaces.

4. Compaction of the roadway subgrade within linear grading limits.

1.02 CLASSIFICATIONS

A. All linear grading will be classified as follows:

1. Class 1: Shall consist of grading where the topography is such that the excavation necessary to bring the roadway to the designated cross section will approximately make the nearby embankments with a minimum of drifting or hauling, and where it will not be necessary to control the finished grade line for purposes other than to obtain minimum cover over culverts.

2. Class 2: Shall consist of grading where it is necessary to excavate and haul material to bring the roadway to the desired grade and may involve work on high banks and side hills.

B. The class of linear grading designated on the plans will apply only to those sections which have been specifically indicated as such on the plans and will not be subject to change during construction.

1.03 CONSTRUCTION REQUIREMENTS

A. The roadway shall be brought to the required grade and cross section within reasonable tolerances by backsloping, ditching, removing stone and boulders from the roadbed surface, or any other work necessary, including drifting and hauling of any excavated material. A reasonable tolerance in alignment means a maximum gradual deviation of 0.5 feet, free of sharp breaks, to take advantage of favorable topography. Gradual deviation in alignment will also be permitted, if necessary to center an existing drainage structure that is to be used in place. A reasonable tolerance in grade means a final grade that is uniform in appearance, free of sharp breaks or humps, and within 1 inch of plan grade.

B. Stumps, roots, rubbish or any other deleterious material shall not be placed in embankments. Where an embankment less than 2 feet high is to be constructed, all vegetative matter shall be cut and removed from the surface upon which the embankment is to be placed. The cut-over surface shall be thoroughly broken. All ditches including inlet and outlet ditches shall be cut to grades that will properly drain. The required cross section for inlet an outlet ditches leading to or from structures shall be of a width not less than the width of the floor or the diameter of the structure being served. Finishing operations shall continue until the roadbed is free from sharp breaks in alignment and grade, and until it has been shaped to the required cross section. Material considered unsuitable for the subgrade shall be disposed of on nearby slopes or as otherwise directed by the engineer.

C. If obliteration of old roads is designated in the contract to be performed on a linear grading basis, such obliteration shall include all grading operations necessary to fill the ditches and blend the old road with the natural ground to provide a pleasing appearance.

D. Any subgrade upon which a surface is to be placed shall be compacted in accordance with the specifications.

2.00 **PRODUCTS** - NOT APPLICABLE

3.00 **EXECUTION** – NOT APPLICABLE

END OF SECTION 312213

DIVISION 31 – EARTHWORK

SECTION 312300 - EXCAVATING, FILLING AND GRADING

1.00 GENERAL

1.01 DESCRIPTION OF WORK

A. This section includes, but is not limited to, the following:

1. Trenching
2. Backfill, Compaction and Grading
3. All Related Items

1.02 QUALITY ASSURANCE

A. Applicable Standards:

1. American Society for Testing and Materials (ASTM).

1.03 JOB CONDITIONS

A. Existing Utilities:

1. Locate existing underground utilities in the areas of work before starting earthwork operations. Where utilities are to remain in place, provide adequate means of protection during earthwork operations.

2. Should uncharted, or incorrectly charted piping or other utilities be encountered during excavation, consult the utility owner immediately for directions. Cooperate with the owner and public and private utility companies in keeping their respective services and facilities in operation. Repair damaged utilities to the satisfaction of the utility owner.

3. Do not interrupt existing utilities servicing facilities occupied and used by the Owner or others, except when permitted in writing by the Engineer and only after acceptable temporary utility services have been provided. Completely remove from the site underground utilities indicated to be removed. Coordinate with local utility companies for shut-off services if lines are active.

B. Use of Explosives:

1. Blasting is not anticipated to be required during construction. If blasting is required, the Contractor shall not transport or use explosives on the site without notification and approval of the Owner and Engineer in writing. The Contractor shall comply with existing State and Federal laws regarding transporting, storing and handling explosive materials. The Contractor shall be solely responsible for the handling, storage and use of explosive materials.

C. Temporary Protection:

1. Barricade open excavations occurring as part of this work and post with warning lights. Operate warning lights as recommended by authorities having jurisdiction.

2. Protect structures, utilities, sidewalks, pavements and other facilities from damages caused by settlement, lateral movement, undermining, washout and other hazards created by excavation operations.

3. Temporary covering or enclosures and temporary heat shall be provided as necessary to protect bottoms of excavations from freezing and frost action when the atmospheric temperature is less than 35 degrees F. Work shall not be installed on frozen excavation bases or subbases.

D. Temporary Erosion Control:

1. The Contractor shall be responsible for keeping surface water runoff free from silt, sediment and earth fill material in areas disturbed by all construction activities.

E. Private Easements:

1. Where excavation occurs on private easement, stockpile topsoil and replace after construction on disturbed areas.

F. Rock Excavation:

1. Rock excavation includes removal and disposal of rock material encountered that cannot be removed by conventional methods. Rock material includes boulders 1/2 Cu. Yd. or more in volume, and rock in beds, ledges, unstratified masses, and conglomerate deposits. When excavation of the rock material requires systematic use of pneumatic or hydraulic tools or a rock trencher, rock excavation shall be allowed under guidelines of this section of Specifications and Section 20-5.01 of the Standard Specifications, and paid for at the rate specified in the Bid Schedule. Shale, boulders (less than 1/2 Cu.Yd. in size), sandstone, gravel, and similar rocky material that can be removed by conventional methods WILL NOT be considered as rock excavation nor allowed for payment. Where blasts are made, the excavation shall be covered with brush, timber, or matting to prevent danger to life and property, and the CONTRACTOR shall secure a special permit from the local governmental authorities for blasting when required. Care shall be taken not to damage adjacent structures, property, or site improvements; or weaken the bearing capacity of rock subgrade when using explosives. Before starting work in areas where rock excavation will be required, the existing condition of adjoining properties shall be verified. Photographs shall be taken to record any existing settlement or cracking of structures, pavements, and other improvements. A list of such damages shall be prepared, verified by dated videos and signed by the CONTRACTOR and others conducting the investigation.

2. For water main excavations for PVC pipe up to 12 inches in diameter, rock shall be excavated to a width of at least 18 inches more than the inside diameter for PVC pipe, for the entire depth of the excavation. Rock excavation for pipe will be at least 6 inches below the bottom of the pipe and at least 3 inches below the bottom of the bell of a joint. For water main excavations for PVC pipe 14 inches in diameter and greater, rock shall be excavated to a width of at least 30 inches more than the inside diameter for PVC pipe, for the entire depth of the excavation. Rock excavation for pipe will be at least 9 inches below the bottom of the pipe and at least 6 inches below the bottom of the bell of a joint. Before the pipe is laid, the base of the excavation shall be replaced with a cushion of SELECT GRANULAR BACKFILL. All irregularities of the rock are to be filled with compacted granular backfill as well. In addition, “soft” rock (i.e., rock not allowed for payment as rock excavation, but that can be removed by conventional methods) shall be properly bedded with a cushion of SELECT GRANULAR BACKFILL, to avoid rough edges or other irregularities from damaging the water pipe.

3. The CONTRACTOR, on encountering rock via the trenching/open cut method, shall sufficiently uncover various spot locations to assure the overall extent of rock in that particular location. The CONTRACTOR, on encountering rock via the directional boring method, shall sufficiently prove the overall extent of rock in that particular location by either accurate records of the pressure at the bore head or uncovering spot locations as directed by the ENGINEER/OWNER. In either case he shall immediately notify the ENGINEER/OWNER, who either (1) will approve rock excavation in that area as necessary, or (2) will provide the CONTRACTOR with an alternate water line routing which could produce a location that eliminates the necessity of all/part of the rock excavation.

4. The CONTRACTOR must understand that if it is the ENGINEER’S/OWNER'S decision to relocate the water main to avoid the encountered rock, a reasonable time lapse to obtain alternate routing would be necessary. All direct costs involved in re-routing of the water line to a different location to avoid rock excavation will be borne by the OWNER.

5. It shall be the CONTRACTOR's responsibility to dispose of all excavated rock off site, to clean up

debris, and to provide earthen or granular backfill to replace that rock material removed. This work is included in the unit price for Rock Excavation. The CONTRACTOR has five working days from original excavation to remove the rock off site. If after this period of time the rock is not removed from the site, the OWNER has the right to hire an outside agency to remove the rock in a timely manner and these costs shall be withheld from the final Clean-Up/Seeding retainage funds.

6. Rock excavation by the trenching/open cut method shall be paid for at the contract unit price per cubic yard determined by measuring the average length, width, and depth of the area of rock removal. However, the OWNER will pay for no more than 18 inches plus the I.D. of the water main for trench width and 48 inches plus the ID of the water main for trench depth, for water main up to 12 inches; or 30 inches plus the I.D. of the water main for trench width and 9 inches plus the I.D. of the water main plus cover for trench depth for water main 14 inches in diameter and greater; whether in rock or in a combination of rock and earth. In addition, only Rock as defined above will be included in the measurement for a particular vertical and/or horizontal profile (i.e., soil or soil/rock material overlaying, intermixed with, or underlaying solid rock will not be included), even if a rock trencher is utilized for the area of removal in question.

7. Rock Excavation by the directional boring method shall be paid for at the contract unit price per cubic yard determined by measuring/estimating the average volume (diameter of rock cutter & estimated length of rock) of the rock removal. However, the OWNER will pay for no more than 1.3 times the diameter of the pipe. In addition, only Rock as defined above will be included in the measurement for a particular vertical and/or horizontal profile (i.e., soil or soil/rock material overlaying, intermixed with, or underlaying solid rock will not be included), even if a rock cutter is utilized for the area of removal in question. Once the quantity for rock excavation for a particular area has been measured in the field and submitted by the CONTRACTOR and approved for payment by the OWNER, the CONTRACTOR waives any and all rights to request a change in the quantity in the future.

G Top Soil Excavation

1. Top soil shall be excavated and stored separately from other excavated material so can be used as final backfill where necessary.

2.00 PRODUCTS

2.01 MATERIALS DESCRIPTION

A. Cohesionless materials include gravels, gravel-sand mixtures, sands, and gravelly sands exclusive of clayey and silty material, materials which are free-draining and for which impact compaction will not produce a well-defined moisture-density relationship curve and for which the maximum density by impact methods will generally be less than by vibratory methods.

B. Cohesive materials include silts and clays generally exclusive of sands and gravel--materials for which impact compaction will produce a well-defined moisture-density relationship curve.

C. Impervious cohesive materials shall be defined as CH or CL materials as defined by the Unified Soil Classification System.

D. Permeable materials shall be defined as either non-cohesive or cohesive materials that do not meet the specifications for impervious cohesive materials.

E. Waste Materials:

1. Waste materials include excess suitable materials and all materials unsuitable for use in the work.

a) Unsuitable materials include all materials that contain debris, roots, organic matter, frozen matter, rock (with any dimension greater than one-half the loose layer thickness) or other materials that are determined by Engineer as too wet or otherwise unsuitable for providing a stable subgrade or stable foundation for structures.

b) Suitable materials include materials that are free of debris, roots, organic matter, refuse, ashes, cinders, frozen matter and that which is free of rock with any dimension greater than one-half of the specified loose layer thickness.

2. All waste materials (excess suitable and all unsuitable) encountered during trenching shall be removed from the immediate work area and disposed of, as directed by the Engineer. The Contractor shall furnish satisfactory backfill material wasted from trench excavation in other locations or from other sources furnished by the Contractor.

F. Borrow Materials:

1. Borrow materials include all fill materials and topsoil obtained from approved locations.

2. Borrow shall include all excavating, handling, and final disposal of materials as specified.

a) Borrow, as required to bring the excavations to the lines and grades indicated, shall be furnished by the Contractor without additional compensation.

3. Borrow Areas: All offsite borrow areas shall be arranged for by the Contractor, subject to approval by the Engineer.

G. Backfill Materials:

1. Backfill materials include satisfactory soil materials from excavations and borrow areas.

2. Materials shall not contain gravel, stones, or shale particles.

3. Backfill shall be free of roots or other organic matter, refuse, ashes, cinders, frozen earth or other deleterious matter.

H. Topsoil Materials:

1. Topsoil materials include other unsuitable materials retained as the result of stripping borrow areas or other excavation.

I. Granular Base Materials:

1. Material shall be crushed stone with the following gradation:

Sieve Size	Percent Passing
1 ½”	100
1"	95 ± 5
1/2"	75 ± 15
No. 4	43 ± 13
No. 16	25 ± 15
No. 200	8 ± 4

2. Material shall not have loss of more than 15% after 5 cycles when tested for soundness with sodium sulfate as described in ASTM C88.

3. Material shall have a percentage of wear not to exceed 50% as determined by ASTM C131.

4. Material shall be used in locations as shown on the Plans.

5. Material shall be IDOT Designation CA-6

J. Granular Backfill Materials:

1. Materials shall be crushed stone with the following gradation:

Sieve Size	Percent Passing
1 ½"	100
1"	95 ± 5
1/2"	75 ± 15
No. 4	43 ± 13
No. 16	25 ± 15
No. 200	8 ± 4

2. Materials shall be IDOT Designation CA-6

K. Bedding Materials:

1. Materials shall be crushed stone with the following gradation:

Sieve Size	Percent Passing
1 ½"	100
1"	95 ± 5
1/2"	45 ± 15
No. 4	5 ± 5

2. Materials shall be IDOT Designation CA-7

2.02 SOIL CLASSIFICATIONS

A. Satisfactory soil materials shall be nonswelling materials with plastic indexes of less than 20 and liquid limits less than 40. Soil meeting these requirements under the Unified Soil Classification System for the following soil groups are acceptable:

Classification	Description
GW.	Well graded gravels, gravel-sand mixtures, little or no fines.
GP.	Poorly graded gravels, gravel-sand mixtures, little or no fines.
GM.	Silty gravels, poorly graded gravel-sand-silt mixtures.
SW.	Well graded sands, gravelly sand, little or no fines.
SP.	Poorly graded sands, gravelly sands, little or no fines.
SM.	Silty sands, poorly graded sand-silt mixture.
SC.	Silty sands, sand-clay mixtures.
ML.	Inorganic silts, and very fine sands with slight plasticity.
CL.	Silty or sandy clays of low plasticity.

B. Unsatisfactory soil materials consist of all other materials including the following that are classified under the Unified Soil Classification System:

Classification	Description
OL.	Organic silts and organic silty clays of low plasticity.
MH.	Inorganic silts, micaceous or diatomaceous fine sandy or silty soils, elastic silts.
CH.	Inorganic clays of high plasticity, fat clays.
OH.	Inorganic clays of medium to high plasticity, organic silts.
PT.	Peat and other highly organic soils.

3.00 EXECUTION

3.01 EXCAVATION

A. Excavation consists of the removal and disposal of materials encountered when establishing the required grade elevations and subgrade elevations.

B. Earth excavation includes the removal and disposal of pavements and other obstructions visible on the ground surface, underground structures and utilities indicated to be replaced and removed, material of any classification indicated in data on subsurface conditions and all other materials encountered that are not classified as rock excavation or unauthorized excavation.

C. Rock excavation consists of the removal and disposal of materials encountered that cannot be excavated with a 3/4 cubic yard capacity power shovel without drilling and blasting, or continuous use of a ripper or other special equipment, except such materials that are classified as earth excavations.

1. Typical of materials classified as rock are boulders 1/2 cubic yard or more in volume, solid rock, rock in ledges, and rock-hard cementitious aggregate deposits.

2. Intermittent drilling that may be performed to increase production and is not necessary to permit excavation of the material encountered will be classified as earth excavation.

D. Unauthorized excavation consists of removal of materials beyond indicated elevations without the specific direction of the Engineer. Unauthorized excavation shall be replaced by backfilling and compacting as specified for authorized excavations of the same classification, unless otherwise directed by the Engineer.

E. Additional excavation consists of carrying excavations deeper and replacing the excavated material as directed by the Engineer if unsuitable materials are encountered at the required subgrade elevations. When excavation has reached required subgrade elevations, the Contractor shall notify the Engineer, who will make an inspection of conditions.

F. Excavation for Structures:

1. Conform to the elevations and dimensions shown on the drawings, within a tolerance of plus or minus 0.10', and extending a sufficient distance from footings and foundations to permit placing and removal of concrete formwork, installation of services, and other construction, and for inspection.

2. In excavating for footings and foundations, take care not to disturb the bottom of the excavation. Excavate by hand to final grade just before concrete reinforcement is placed. Trim bottoms to the required lines and grades to leave a solid base to receive concrete.

3.02 TRENCH EXCAVATION AND BACKFILL

A. Excavation:

At minimum, topsoil shall be stripped for the entire width of the permanent easement limits as shown on the Drawings. If construction traffic adjacent to the trench or structure causes topsoil and subsoil to be mixed, additional topsoil removal and stockpiling may be required to avoid mixing topsoil and subsoil. The depth of topsoil stripping shall be the actual depth of topsoil as determined in the field (minimum 6 inches) up to 24 inches maximum.

Prior to stripping topsoil from the designated areas, brush, grass, agricultural crops or other unsuitable material shall be removed and properly disposed of or conserved as mulch and incorporated into the topsoil. The material shall be chopped through a brush chopper, shredded by means of a commercial sized rotary blade mower or reduced by other approved methods.

Unless it can be placed directly on the prepared areas, topsoil shall be stockpiled for later incorporation into the work. Stockpiles shall be placed at approved locations and to approved dimensions. Care shall be taken to keep topsoil stockpiles separate from other soils materials. Where construction traverses lands owned by multiple landowners, separate topsoil stockpiles shall be established for each landowner. When

spreading topsoil, care shall be taken to apply topsoil on lands for the appropriate landowner.

Vegetation or other matter unsuitable for incorporation into the topsoil (weeds, inorganic matter, wood, tree limbs, branches, debris, trash, clay clods, rocks or other materials which would inhibit the germination of seeds or crop growth) shall be disposed properly.

This section of the Specifications pertains to areas that have been stripped of topsoil for construction purposes. Areas to be covered with topsoil shall first be completed to the designated lines and grades. The entire area where the topsoil has been removed shall be ripped to a total depth of approximately 24 (twenty-four) inches, prior to placement of the topsoil.

Ripper shank spacing shall be 20" to 30". Other approved equipment may be used here access limits the use of a ripper. Total ripper depth for this phase (prior to placing topsoil) shall not exceed twenty-four (24) to thirty (30) inches. Contractor shall coordinate and provide protective measures to safeguard other portions of the Work and other existing utilities to avoid damage from ripping activities.

Topsoil shall be placed in a uniform manner to the same depth commensurate with the quantity of topsoil removed from the area to be covered.

Topsoil shall be keyed to the underlying material. After the topsoil has been spread, large stiff clods, stones or other foreign material that would be a detriment to the effectiveness or appearance of the topsoil shall be raked up and removed from the area.

Following topsoil placement, Contractor shall chisel plow the entire width of the construction area encompassing the total width and length of the Temporary Construction Easement and the Permanent Easement. This includes areas within the Temporary Construction Easement and the Permanent Easement where the topsoil may not have been removed for construction purposes. This entire area shall be chisel plowed and leveled. The total chisel plow depth shall not exceed the thickness of the topsoil. The total chisel plow depth shall not to exceed twelve (12) to fifteen (15) inches or the actual depth of topsoil, whichever is less.

Chisel plow shank spacing shall be 20" to 30". Total chisel plow depth (following topsoil placement) shall not exceed twelve (12) to fifteen (15) inches. Contractor shall coordinate and provide protective measures to safeguard other portions of the Work and other existing utilities to avoid damage from chisel plowing activities.

Other means to eliminate areas of packed or crusted topsoil may be proposed by Contractor and implemented only upon approval of Engineer.

Topsoil shall be "lightly" compacted and leveled in order to avoid settlement after completion of the project and reclamation.

1. Excavation shall include all site clearing and preparation where required, trenching, subgrading for pipe, bell holes, cell sheeting, shoring, bracing and dewatering of trenches and other excavations, protecting of adjacent property, pipe placement, backfilling, all specified backfill consolidation and surfacing, removal and replacement of pavements and surfacing, and other work necessary and required, unless separate payment has been established in the contract documents for the individual items.

2. Trenches shall be excavated to lines and grades necessary to accept the pipes shown on the plans or as established by the Engineer. The minimum cover for water main shall be 72”.

3. Trenches in all instances shall be kept to minimum widths to a point 12" above top of pipe. Remaining trench to be kept to minimum width as near as possible. Contractor is to use sheeting or an approved method to insure voidance of excessive widths. Trenching under existing utilities shall be by hand method and utility supported by approved methods.

4. Trenches in rock shall be excavated to minimum widths as specified. All rock and shale excavation not suitable for backfill materials shall be removed from the site and disposed of at the expense of

the Contractor. All work in connection with blasting operations, including necessary and proper safety precautions, shall be performed under expert supervision and in compliance with all laws, ordinances, and applicable safety code requirements and regulations. The Contractor shall in no way hold the Owner or Engineer responsible for any damage or suits caused by his blasting operation.

5. If over digging occurs, all loosened earth must be removed and brought back to grade with approved aggregate (3/4" max.), compacted to 95% density, without additional cost to the Owner.

6. Any material below the specified plan grade which is not, or cannot be made stable by drainage or compaction, in the opinion of the Engineer or his representative, shall be removed and replaced with an approved aggregate (3/4" max.).

7. Trenches shall be reasonably dry when trench bottoms are prepared. When bedding is not used, a required continuous trough shall be hand-excavated or shaped to receive the bottom quadrant of the pipe, and in addition, bell holes, if required, shall be excavated so that after placing pipe, only the pipe barrel (not the bells) receives bearing pressure from the trench bottom.

8. Tunneling operations shall be done only where such is required by the plans, provided that the adjacent trench depth and soil conditions are adequate and suitable for such construction. All bracing, shoring, sheeting, pipe placement, and backfill shall be the responsibility of the Contractor to be performed in compliance with OSHA regulations.

B. Ductile Iron Laying Conditions:

1. The laying conditions of the water main shall conform to the five trench types standardized in AWWA C150. The trench type used shall conform to the maximum depth requirement in AWWA C150 and as indicated in the plans.

2. Type 1 Trench will not be allowed.

Condition	Description
Type 1†	Flat-bottom trench.‡ Loose backfill.
Type 2	Flat-bottom trench. Backfill lightly consolidated to centerline of pipe.
Type 3	Pipe-bedded in 4-in.. minimum loose soil.§ Backfill lightly consolidated to top of pipe.
Type 4	Pipe bedded in sand, gravel, or crushed stone to depth of 1/8 pipe diameter. 4-in. minimum. Backfill compacted to top of pipe. (Approximately 80% Standard Proctor, AASHTO T-99)**
Type 5	Pipe bedded to its centerline in compacted granular material, 4-in. minimum under pipe. Compacted granular†† or select material§ to top of pipe. (Approximately 90% Standard Proctor, AASHTO T-99)**

†For pipe 14 in. (356 mm) and larger, consideration should be given to the use of laying conditions other than Type 1.
‡Flat-bottom is defined as “undisturbed earth.”
§Loose soil or select material is defined as “native soil excavated from the trench free of rocks, foreign material, and frozen earth.”
**AASHTO T-99 Standard Method of Test for the Moisture-Density Relations of Soils Using a 5.5 lb (2.5 kg) Rammer nd a 12 in. (305 mm) Drop. Available from the American Association of State Highway and Transportation Officials, 444 N. Capitol St. N.W., Suite 249, Washington, DC 20001.
††Granular materials are defined per the AASHTO Soil Classification System (ASTM D3282) or the Unified Soil Classification System (ASTM D2487), with the exception that gravel bedding/backfill adjacent to the pipe is limited to 2 in. maximum particle size per ANSI/AWWA C600.

		Laying Conditions

		Type 1 Trench	Type 2 Trench	Type 3 Trench	Type 4 Trench	Type 5 Trench
Size (in.)	Pressure Class (psi)	Maximum Depth of Cover (ft)				
30	200	N/A	8	12	16	24

C. PVC Laying Conditions:

1. The laying conditions of the water main shall conform to the five trench types standardized in AWWA C605, PVC Installation Standard.

2. Preparation of the trench bottom. The trench bottom shall be constructed to provide a firm, stable, and uniform support for the full length of the pipe. When embedment Type 4 or 5 is required in the project contract documents, some additional excavation at each bell and spigot joint shall be provided so that the pipe does not rest on the bell.

3. Rock conditions. Ledge rock, boulders, cobbles, and large stones shall be excluded from all embedment placed within 4 in. around the pipe and appurtenances. The excavation shall be wide enough to enable proper placement of the embedment as required in the project contract documents. When excavation is completed, bedding material shall be placed and leveled to provide a proper, uniform-bearing, cushion under the pipe. The bedding material shall be Class I or II soil and remain uncompacted.

Condition	Description
Type 1	Loose embedment.
Type 2	Class II, III, or IV material from trench excavation, lightly compacted to pipe centerline.
Type 3	Pipe bedded on 4 in. minimum of loose Class II, III, or IV material. Class II, III, or IV material from trench excavation lightly compacted to pipe centerline.
Type 4	Pipe placed on Class I or II bedding having depth of 1/8 pipe diameter or 4 in. minimum. Class II, III, or IV material from trench excavation compacted to >80% standard proctor density per ASTM D698 to top of pipe.
Type 5	Same as Type 4 except Class II, III, or IV bedding shall be compacted to >90% standard proctor density per ASTM D698 to top of pipe.

Soil Classes for Pipe Embedment

Soil Class	Description	USCS symbol
I	Crushed rock	
II	Clean, coarse-grained soils	GW, GP, SW, SP
III	Coarse-grained soils with fines	GM, GC, SM, SC
	Sandy or gravelly, fine-grained soils	ML, CL
IV	Fine-grained soils	ML, CL
V	Fine-grained soils, organic soils	MH, CH, OH, OH, Pt

Notes:
1. Soil classification description and symbols are in accordance with ASTM D2487 and ASTM 2488.
2. For Class I, all particle faces shall be fractured.
3. Materials such as broken coral, shells, slag, and recycled concrete (with less than 12% passing a #200 sieve) should be treated as Class II soils.

D. HDPE Laying Conditions:

1. The laying conditions of the water main shall conform with the minimum design calculations set forth in AWWA Manual M55, PE Pipe Design and Installation.

2. Bedding. A layer of Class I or Class II material should be placed on the trench bottom and left uncompacted. The bedding should be four inches thick for pipe less than 60 inches in diameter and

six inches thick for 60 inch and larger pipe. If the bottom of the trench is rock or contains cobbles or boulders, the bedding thickness should be increased at least two inches.

3. The maximum allowable particle size in embedment is 1.5 inch for pipe diameter 18 inch and greater.

4. The modulus of soil reaction (E') for the embedment material shall be at least 400 psi for pipe installations up to 24' depth. This can be accomplished by the embedment material either be uncompacted Class II (GW, GP, SW, SP) or Class IV (CL, ML) material compacted to 85%-90% standard proctor ASM D698.

E. Backfill:

1. All trenches and excavations shall be backfilled immediately after pipe is laid therein, unless other protection of the pipe line is directed. Under no circumstances, however, shall water be permitted to rise in un-backfilled trenches after pipe has been placed or during the laying of pipe. Material used for backfilling shall not contain stones, frozen earth, debris, or earth with an exceptionally high void content. For backfill from bedding material to a level of 12" over the top of the pipe for full length, only approved granular material or selected materials shall be used and placed in uniform layers not exceeding 6" in depth up each side. Each layer shall be placed, then carefully and uniformly tamped so as to eliminate the possibility of later displacement. Any excess backfill material shall be removed from the jobsite. Where unsuitable backfill material is encountered, the Contractor shall, at his own expense, provide and place acceptable backfill material. All sod and surfacing's damaged by trenching operations shall be replaced or reseeded as directed by the Engineer.

2. Puddling or water flooding for consolidation of backfill material shall be subject to approval of the Engineer. In general, the addition of water should be limited to achieving optimum moisture content for tamping procedures.

3. Whenever trenches or other excavations made by the Contractor in the performance of work under this Contract have not been properly filled, or where settlement has occurred at any time prior to the final acceptance of the entire work covered by the contract and guarantee period of five (5) years after substantial completion, to the extent that the top of the backfill is below the original ground surface, such trenches shall be refilled and the backfill surface compacted and smoothed to conform to the elevations of the adjacent ground surface. The Contractor shall be responsible for all damages which might occur as a result of the settlement of trench or other backfill made by him in the fulfillment of his contract within and during a period of five years from and after the date of substantial acceptance of entire project thereof by the Owner, including (a) the cost to the Owner of all claims for damages filed with and court action brought against, the said Owner for and on account of such damage, and (b) the repair to the satisfaction of the Owner of any and each pavement, driveway, curb, slab, walk, lawn, or structure damages by such backfill settlement.

4. Backfill operations at fittings, gate valves and hydrant locations shall not occur until all materials and work have he viewed by the owner or RPR.

3.03 SHORING AND BRACING

A. Slope or bench the sides of excavations to comply with local codes and ordinances having jurisdiction. Shore and brace where sloping is not possible either because of space restrictions or stability of material excavated.

B. Maintain sides and slopes of excavations in a safe condition until completion of backfilling.

C. Provide shoring and bracing to comply with local codes and authorities having jurisdiction.

D. Provide materials for shoring and bracing, such as sheet piling, uprights, stringers and cross-braces, in good serviceable condition.

E. Maintain shoring and bracing in excavations regardless of the time period excavations will be open. Carry down shoring and bracing as the excavation progresses.

3.04 DEWATERING

A. Prevent surface water and subsurface or ground water from flowing into excavations and flooding the project site and surrounding area.

B. Do not allow water to accumulate in excavations. Remove water from excavations to prevent softening of foundation bottoms, undercutting footings, and soil changes detrimental to the stability of subgrades and foundations. Provide and maintain pumps, well points, sumps, suction and discharge lines, and other dewatering system components necessary to convey the water away from the site.

C. Convey water removed from excavations and rain water to collector run-off areas. Do not use trench excavations for site utilities as temporary drainage ditches.

D. Provide an adequate system to lower and control the groundwater in order to permit excavation, construction of structures and the placement of fill materials to be performed under dry conditions. Install sufficient dewatering equipment to pre-drain the water-bearing strata above and below the bottom of structure foundations, drains, sewers, and other excavations.

E. Reduce the hydrostatic head in the water-bearing strata below structure foundations, drains, sewers, and other excavations to the extent that the water level and piezometric water levels in the construction areas are below the prevailing excavation surface at all times.

F. Maintain piezometric water level a minimum of 1' below the excavation surface.

G. Prior to excavation below groundwater level, place the dewatering system into operation to lower the water levels as required and then operate it continuously 24 hours a day, 7 days a week until drains, sewers and structures have been constructed, including placement of fill materials, and dewatering is no longer required.

H. Dispose of water removed from excavations in such a manner so as to not endanger public health, property, and portions of the work under construction or completed. Dispose of water in such a manner that will cause no inconvenience to others engaged in work about the site. Provide sumps, sedimentation tanks, and other flow control devices as required by governing authorities.

I. Provide complete standby equipment, installed and available, for immediate operation as may be required, to adequately maintain dewatering on a continuous basis in the event that any part of the system becomes inadequate or fails. In the event dewatering requirements are not satisfied due to inadequacy or failure of the dewatering system, perform such work as may be required to restore damaged structures and foundation soils at no additional expense.

3.05 MATERIAL STORAGE

A. Stockpile excavated materials classified as satisfactory soil material where directed until required for backfill or fill. Place, grade and shape stockpiles for proper drainage.

B. Locate and retain fill materials away from edges of excavations.

C. Dispose of excess soil material and waste materials as herein specified.

3.06 MOISTURE CONTROL

A. Where the subgrade of layer of soil material must be moisture conditioned before compaction, uniformly apply water to the surface of subgrade, or layer of soil material to prevent free water from appearing on the surface during or subsequent to compaction operations.

B. Remove and replace, or scarify and air dry, soil material that is too wet to permit compaction to specified

density.

1. Soil material that has been removed because it is too wet to permit compaction may be stockpiled or spread and allowed to dry. Assist drying by discing, harrowing or pulverizing, until the moisture content is reduced to a satisfactory value.

3.07 BACKFILLING STRUCTURES

A. Ground Surface Preparation:

1. Remove vegetation, debris, unsatisfactory soil materials, obstructions and deleterious materials from ground surface prior to placement of fills. Plow, strip, or break up sloped surfaces steeper than 1 vertical to 4 horizontal so that fill material will bond with existing surface.

2. When the existing ground surface has a density less than that specified under "Compaction" for the particular area classification, break up the ground surface, pulverize, moisture-condition to the optimum moisture content, and compact to the required depth and percentage of maximum density.

B. Backfilling shall not be performed until:

1. Construction has been completed below finish grade including, where applicable, dampproofing, waterproofing, and perimeter insulation.

2. Underground utility locations have been recorded, inspection and testing have been performed and approval has been granted.

3. Concrete formwork has been removed.

4. Shoring and bracing have been removed and voids have been filled with satisfactory materials. Temporary sheet piling driven below the bottom of structures shall be cut off and removed in a manner that will prevent settlement of the structure or utilities or left in place, if required.

5. Trash and debris have been removed.

6. Permanent or temporary horizontal bracing is in place.

7. Concrete has attained its design strength, but no sooner than seven (7) days after it was placed.

8. A sufficient portion of the structure has been built to resist the imposed load.

C. Perform backfilling simultaneously on all sides of the structures.

D. Exercise extreme care in the use of heavy equipment in backfill areas.

3.08 PLACEMENT AND COMPACTION

A. Granular Base Material:

1. General: Granular base material shall be placed in the areas and to the cross-sections and thickness as indicated on the plans.

2. Place granular base material on prepared subgrade in layers not to exceed 6" compacted depth.

3. Maintain optimum moisture content for compacting material during placement operations.

4. The material shall be compacted by rolling or mechanical tampers.

5. Base material shall be compacted to 90% of relative density, or 95% conforming to ASTM D1557,

whichever is applicable.

6. Thickness and grade tolerances shall be plus or minus 0.10'.

B. Minimum Density Requirements:

1. Compact soil to not less than the following percentages of maximum dry density for soils which exhibit a well-defined moisture density relationship determined in accordance with ASTM D1557; and not less than the following percentages of relative density determined in accordance with ASTM D2049, for soils which will not exhibit a well-defined moisture density relationship.

a) Structures: Compact top 12" of subgrade and each layer of backfill or fill material at 95% maximum dry density.

b) Pavements: Compact top 12" of subgrade and each layer of backfill or fill material at 95% maximum dry density.

c) Unpaved Areas: Compact top 6" of subgrade and each layer of backfill or fill material at 95% maximum dry density.

(i) Cropland Areas: Special care shall be taken by the Contractor to avoid mixing of topsoil and subsoils, as well as avoiding over compaction. The intent is to minimize the impacts of the soil morphology within the farmland areas and allow for continued benefits in crop yields within the disturbed areas.

3.09 GRADING

A. General:

1. Uniformly grade areas within the limits of site grading including adjacent transition areas. Smooth finished surfaces within specified tolerances, compact with uniform levels or slopes between points where elevations are shown, or between such points and existing grades.

2. The degree of finish required will be that ordinarily obtainable from either blade-grader or scraper operations.

B. Ditches:

1. Finish ditches to ensure proper flow and drainage. Conduct final rolling operations to produce a hard, uniform and smooth cross-section.

C. Unpaved Areas:

1. Finish areas to receive topsoil to within not more than 0.10' above or below the required subgrade elevations, compacted as specified, and free from irregular surface changes.

D. Surface of Fill Under Slabs:

1. Grade the surface of fill under slabs smooth and even, free of voids, compacted as specified, and to required elevation. Provide final grades within a tolerance of not more than 0.10' above below the required subgrade elevation.

3.10 FIELD QUALITY CONTROL

A. The testing service will inspect and approve subgrades and fill layers before additional construction work is performed.

B. Field density tests will be performed in accordance with ASTM C 1556 (sand cone method) or ASTM D 2167 (rubber balloon test), as applicable.

C. If, in the opinion of the Engineer, based on testing service reports and inspection, the subgrade or fills which have been placed are below the specified density, additional compaction and testing will be required at no additional expense to the Owner.

3.11 MAINTENANCE

A. Protection of Graded Areas:

1. Protect newly graded areas from traffic and erosion. Keep free of trash and debris.

2. Repair and re-establish grades in settled, eroded and rutted areas to the specified tolerances.

3. Reconditioning Compacted Areas: Where completed compacted areas are disturbed by subsequent construction operations or adverse weather, scarify the surface, re-shape and compact to the required density prior to further construction. Use hand tamping for recompaction over underground utilities.

3.12 DISPOSAL OF EXCESS AND WASTE MATERIALS

A. Transport all trash, debris, trees, stumps, roots, ashes, cinders, or other refuse to an approved disposal area off Owner's property. Excess excavated material shall be placed at locations approved by the Owner and as directed by the Engineer.

3.13 GRANULAR TRENCH BACKFILL

A. Granular trench backfill is a Class I aggregate material placed above the initial backfill and extending up to existing grade. It is the intent to backfill all street and driveway crossings and areas where new water lines and new sewer lines will be under the street roadbed with granular trench backfill. The cost of these aggregates and their installation shall be shown in the unit price per lineal foot of water or sewer line installation. Granular trench backfill shall be compacted to 95% maximum dry density.

3.14 SEEDING AND SODDING

A. All grassed areas shall be replaced and maintained to a condition equal or better than existing prior to construction meeting land owner’s satisfaction and any easement restrictions . All disturbed areas shall be ripped, graded, fertilized, seeded, mulched and erosion controlled until grass is re-established.

B. Contractor shall do soil testing at their own expense should the land owner, easement, or engineer deem it necessary to re-establish intended vegetation.

END OF SECTION 312300

DIVISION 31 - EARTHWORK

SECTION 312313 - SUBGRADE PREPARATION

1.00 GENERAL

A. This work applies to the construction of access entrances.

B. This work shall consist of preparing the subgrade upon which a base course is to be constructed or a surfacing placed. After a base course has been constructed, the top of the completed base course will be considered the subgrade for the next operation. In surfacing contracts involving only incidental grading, the contract shall complete Subgrade Compaction before proceeding with this work.

2.00 PRODUCTS

A. A self-propelled steel wheel roller weighing not less than 10 tons shall be used in preparing any subgrade for flexible type surfacing and weighing not less than 5 tons in preparing any subgrade for Portland cement concrete base course or pavement.

3.00 EXECUTION

A. The subgrade shall be substantially uniform in density throughout its entire width. It shall conform to the lines, grades and typical cross sections shown on the plans, or as established by the engineer. The subgrade shall be constructed to drain surface water to the side ditches and all ditches shall be kept open by the contractor. Where hauling results in ruts or other objectionable irregularities, the contractor shall reshape and reroll the subgrade before the base or surfacing is placed. If an old traveled roadway comprises any part of the roadbed, the contractor shall loosen the compacted portions to a depth of at least 12 inches and shall reshape the roadbed.

1. All subgrades, except those for aggregate type surfacing, shall be rolled. The subgrades shall be checked after rolling and, if not at the proper elevation at all points, sufficient material shall be removed or added and compacted to bring all portions of the subgrade to the required elevation and density. The moisture content of the top 6 inches of the finished subgrade at the time the base is placed, or at the time the pavement is placed if no base is provided under the pavement, shall be not less than the minimum specified for compacting. If the moisture content has not been maintained, the subgrade shall be scarified, wet to the required moisture content and compacted. A roughly compensating maximum deviation of ¼ inch, plus or minus, from the required elevation will be permitted on the surface of the finished subgrade.

2. Prior to laying base or setting paving forms, the subgrade shall conform to the moisture and density requirements for compaction. Soft spots and unsuitable material shall be removed to a depth not to exceed 24 inches and backfilled with approved stable material.

3. The subgrade for Portland cement concrete pavement shall be compacted, and brought to true shape by an approved subgrade machine. Any material added shall be satisfactorily incorporated and compacted. Before the concrete is placed, a true subgrade shall be shaped by an approved subgrade planer rolling on the forms and any resulting loose material on the subgrade behind the planer shall be recompacted with the 5-ton steel wheel roller. The planer shall be adjustable to produce a subgrade of the exact elevation and cross section. After all grading or planing operations have been completed, and immediately before the concrete is placed, the subgrade shall be checked with an approved heavy metal template which shall be rolled on the forms. Scratch templates with spikes or teeth will not be permitted. A taut line across the top of side forms and a ruler may be used in lieu of a template for checking the subgrade on irregular areas or variable widths. Extreme care shall be taken in forming the crown and shaping the subgrade to ensure that the specified thickness of concrete will be attained in the finished pavement.

   a) The finished subgrade at the time of paving shall be moist, but sufficiently firm to resist rutting or deforming under construction traffic.

4. No direct payment will be made for subgrade preparation.

END OF SECTION 312313

DIVISION 31 - EARTHWORK

SECTION 312323.13 - SUBGRADE COMPACTION

1.00 GENERAL

A. This work shall consist of compacting the earth subgrade for access entrances.

1. The Contractor shall perform this work on the subgrade at all locations for access entrances.

2.00 PRODUCTS

A. NOT APPLICABLE

3.00 EXECUTION

A. The subgrade for the full width of the roadbed shall be scarified to a depth of at least 12 inches, and the scarified material brought to a uniform moisture content either by drying or by adding water and manipulating with suitable equipment. At the contractor's option, the upper 12 inches of soil may be removed and replaced with satisfactory material, or removed and manipulated with suitable equipment before replacing. The material shall be compacted to produce a subgrade having a density not less than the density required and within the moisture contents specified under Section 312300 by the use of approved equipment producing satisfactory results.

B. If it is determined that the required subgrade density cannot be obtained by moisture control and compaction of the upper 12 inches, the unsuitable material shall be excavated to a depth not to exceed 18 inches, and replaced with satisfactory material compacted in layers not to exceed 6 inches except as otherwise permitted by the engineer. Each 6-inch layer shall be processed, wetted or dried as necessary, and compacted to the required density.

C. If an unsatisfactory subgrade has developed through negligence on the part of the contractor, the contractor will be required to restore it to a satisfactory condition at the contractor's expense.

END OF SECTION 312323.13

Intentionally Blank

DIVISION 31 - EARTHWORK

SECTION 312500 - SEDIMENTATION AND EROSION CONTROL

1.00 GENERAL

1.01 DESCRIPTION OF WORK

A. The contractor shall provide sediment and erosion controls for all exposed areas within the project limits, throughout the duration of the contract, including any warranty periods. These controls shall include temporary erosion control, temporary sediment control, and final erosion control.

B. Applicable sections: 312300 Excavating, Filling and Grading; 329000 Fertilizing Seeding and Mulching.

1.02 SUBMITTALS

A. All submittals shall be made in accordance with applicable requirements of Division 1.

B. All submittals shall be made within 45 days prior to anticipated placement of material.

C. Material Reports: Submit material reports for the materials supplier under this section. Reports shall include:

1. Source and Location of Material.

2. Name and Address of Producer.

3. Type and Name of Material.

2.00 PRODUCTS

2.01 CONTROL MEASURES

A. Temporary Erosion Control shall include protection of all exposed surfaces within the project limits, by surface grading/rolling, surface water diversion, temporary seeding and/or mulching, or by temporary cover. Alternate methods may be submitted by the contractor for review and approval by the engineer.

B. Temporary Sediment Control shall include silt fence, silt dike, temporary sediment checks, etc. Sediment controls shall be placed as required to maintain all sediment within the project boundaries. Sediment controls shall be inspected and cleaned/maintained as necessary to maintain function, following each major runoff event. All temporary sediment controls shall be removed and all surfaces protected upon project completion.

C. Permanent Sediment Controls, if required, shall be as shown on the drawings. Permanent sediment controls shall be constructed and maintained by the Contractor, until accepted at project completion.

D. Final Erosion Control shall include final seeding and mulching, 02374 Fertilizing Seeding and Mulching. Disturbed slopes steeper than 3:1 (horizontal:vertical) shall also require erosion protection fabric in place of the mulch specified in the seeding and mulching specification section. Erosion control fabric shall be utilized as follows:

1. 3:1 to 2:1 Slope, S150 as manufactured by North American Green or Regular Curlex Excelsior Blanket as manufactured by American Excelsior Company or approved equivalent.

2. 2:1 to 1:1 Slope, SC150 as manufactured by North American Green or Mid-Velocity Cur lex Excelsior Blanket as manufactured by American Excelsior Company or approved equivalent.

E. Sediment Control shall include silt fence, silt dike, temporary sediment checks, etc. Sediment controls shall be placed as required to maintain all sediment within the project boundaries. Sediment controls shall be

inspected and cleaned/maintained as necessary to maintain function, following each major runoff event. All temporary sediment controls shall be removed and all surfaces protected upon project completion. Permanent sediment controls shall be constructed and maintained until accepted at project completion. Permanent sediment controls, if required, shall be as shown on the drawings.

3.00 EXECUTION

3.01 CONSTRUCTION REQUIREMENTS

A. The Contractor shall install control measures as shown on the plans and as necessary to limit erosion and prevent sediment from leaving the project site. The control measures shall be built in accordance with the project plans, specification and detail drawing, as well as the use of good construction practices.

B. The Contractor shall be responsible for the Land Disturbance Permit, the SWPPP, the NPDES coverage for construction sites and the maintenance / monitoring through the completion of the project.

END OF SECTION 312500

DIVISION 31 - EARTHWORK

SECTION 313400 - EMBANKMENT PROTECTION

1.00 GENERAL

1.01 DESCRIPTION OF WORK

A. The work shall consist of slope or bank protection, constructed in locations as indicated on the drawings.

B. Construction of embankment protection shall consist of preparation of subgrade and placement of the embankment protection.

C. Applicable Sections: 312300 Excavating, Filling and Grading; 329000 Fertilizing, Seeding, and Mulching

1.02 SUBMITTALS

A. All submittals shall be made in accordance with applicable requirements of Division 1.

B. All submittals shall be made within 45 days prior to anticipated placement of material.

C. Material Reports: Submit material reports for the materials supplier under this section. Reports shall include:

1. Source and Location of Material.
2. Name and Address of Producer.
3. Type and Name of Material.
4. Gradation/Sizes.

2.00 PRODUCTS

2.01 ROCK BLANKET MATERIAL

A. The material for rock blanket shall be durable stone or broken concrete containing a combined total of not more than 10 percent of earth, sand, shale, and non-durable rock. It is preferable that the material contain a large percentage of pieces as large as the thickness of the blanket will permit, with enough smaller pieces of various sizes to fill the larger voids.

B. For Type 1 Rock Blanket, at least 40 percent of the mass shall be of pieces having a volume of one cubic foot or more. For Type 2 Rock Blanket, at least 60 percent of the mass shall be of pieces having a volume of one cubic foot or more. Generally the material shall range between 3 lbs. and 150 lbs. in size. Acceptance of quality and size of material may be made by visual inspection at the job site or place of manufacture.

2.02 COMPOSITE POLYPROPYLENE FIBER REINFORCEMENT MAT

A. The mat shall be similar to North American Green P550 or equivalent and shall have the following physical properties:

1. Matrix 100% UV Stabilized Polypropylene Fibers
(0.60 lbs/yd^2) (0.32 kg/m^2)

2. Netting Top and Bottom – Super Heavy UV Stabilized Polypropylene
(24 lb/1,000 ft^2 [11.7 kg/100 m^2] approximate weight)

Mid – Super Heavy UV Stabilized Polypropylene
(24 lb/1,000 ft^2 [11.7 kg/100 m^2] approximate weight)

3. Thread Black UV Stabilized Polypropylene

B. Physical Specifications (per roll)

	English	Metric
Width	6.50 ft	2.00 m
Length	55.50 ft	16.90 m
Weight	52.00 lbs +/- 10%	23.58 kg
Area	40.00 yd^2	33.40 m^2
Stitch Spacing	1.50 in 3.81 cm	

C. The composite reinforcement mat shall be a machined produced mat of 100% UV stabilized polypropylene fiber matrix incorporated into a permanent three-dimensional netting structure.

D. The matrix shall be evenly distributed across the entire width of the matting and stitch bonded between three super heavy duty UV stabilized nettings with 0.50 x 0.50 inch (1.27 x 1.27 cm) openings. The middle, dramatically cuspated (crimped) netting shall form prominent closely spaced ridges across the entire width of the mat. The three nettings shall be stitched together on 1.50 inch (3.81 cm) centers with UV stabilized polypropylene thread to form a permanent three-dimensional structure.

E. All mats shall be manufactured with a colored thread stitched along both outer edges (approximately 2-5 inches [5-12.5 cm] from the edge) as an overlap guide for adjacent mats.

3.00 EXECUTION

3.01 CONSTRUCTION REQUIREMENTS FOR ROCK BLANKET

A. The stone material shall be placed in such a manner as to produce a reasonably well graded mass of rock and shall be constructed to the lines and grade shown on the plans. The stone shall be placed on a geotextile fabric similar to Mirafi 160 N-Series geotextile fabric or approved equal that has been attached to the subgrade as per manufacturer's requirements to its full course thickness at one operation. The finish blanket shall be free of objectionable pockets of small stones or clusters of large stones. Placing of the stone in layers will not be permitted. Rearranging of individual stones by mechanical equipment or hand will be required to the extent necessary to obtain a reasonable well graded distribution of stone. The blanket shall be a minimum of 18" thick.

3.02 CONSTRUCTION REQUIREMENT FOR COMPOSITE REINFORCEMENT MAT

A. The reinforcement mat shall be placed on prepared seed bed that has been shown on the plans. The mat shall be unrolled in the direction of water flow with the edges overlapped as shown on the plans and as specified by the manufacturer.

B. The mat shall be stapled with minimum 6" long, 11 ga., wire "U" staples. There shall be 3.75 staples per square yard and located as per the manufacturer's requirements.

END OF SECTION 313400

DIVISION 31 – EARTHWORK

SECTION 317100 - TRENCHLESS DIRECTIONAL BORING

1.00 GENERAL

A. The Contractor shall locate utilities, furnish all labor, materials, equipment, supplies, services, and supervision to provide trenchless directional boring to pull and install in-place the cable, conduit, and pipes as indicated on the drawings and specified herein. All labor, material, and equipment not shown on the drawings and not specified but necessary and incidental to provide first class, complete in-place trenchless directional boring, and make the project operational is included in this contract.

B. The project drawings are intended to cover the layout and design of the trenchless work but should not be scaled for exact measurements. Where specific details and dimensions are not shown, the Contractor shall take measurements and make layouts as required for the proper boring of the trenchless work so that interference with all other work will be avoided. The Contractor shall check all drawings and specifications for the project and shall be responsible for the installation of all trenchless work.

C. The Contractor shall be responsible for coordinating trenchless work with other working trades on the job. Other sections in this contract as applicable to this section of work shall be referred to.

D. The Contractor shall locate utilities, obtain all necessary licenses and permits from the proper authority having jurisdiction to perform the work.

E. The Contractor shall furnish one (1) field set of as built drawings showing location and depths of trenchless borings to the Engineer.

F. The Contractor shall coordinate with all utilities concerning any trenchless work to be done regarding the project.

G. The Contractor shall coordinate the trenchless work, and cooperate fully, with the Owner to insure access to the jobsite. Should the Contractor damage any utilities or work by the Owner during the trenchless directional boring phase, the Contractor shall be held responsible for the cost of repairing such damages.

1.01 OVERVIEW OF THE WORK

A. The trenchless work shall include, but not be limited to, providing directional boring and installing the conduits to the proposed fixtures as shown on the plans and as specified herein.

B. All stipulations of the highway and/or railroad departments shall be adhered to.

2.00 PRODUCTS

2.01 GENERAL

A. All trenchless directional boring materials, components, fabrication, equipment, and installation methods shall be in conformance with the requirements set forth hereafter and with the latest version of the following:

1. Trenchless Technology Directional Boring Industry Standards

3.00 EXECUTION

A. NOT APPLICABLE

END OF SECTION 317100

Intentionally Blank

DIVISION 32 – EXTERIOR IMPROVEMENTS

SECTION 321123 - AGGREGATE BASE COURSE

1.00 GENERAL

1.01 DESCRIPTION OF WORK

A. Work covered under this section consists of furnishing and placing one or more courses of crushed stone aggregate on prepared subgrade.

B. Construction of aggregate base course shall conform to the typical sections, lines, grades and thicknesses as shown on the drawings.

C. Applicable Sections: 312300 Excavating, Filling, and Grading; 311000 Site Clearing

1.02 TESTING AND INSPECTION

A. Contractor will engage and pay for an independent soil testing laboratory and inspection service for quality control testing and reporting.

B. Referenced standards of the American Society for Testing of Materials (ASTM) apply to this section.

2.00 PRODUCTS

A. Aggregate shall be crushed stone, and shall be the angular fragments resulting from crushing by mechanical means of calcareous or dolomitic limestone from undisturbed, consolidated deposits.

B. The crushed stone shall contain not more than 15 percent deleterious rock and shale. Sand may be added to the crushed stone only for the purpose of reducing the plasticity index of the fraction passing the No. 40 sieve in the finished product. Any sand, silt, and clay, and any deleterious rock and shale shall be uniformly distributed throughout the mass.

C. Gradation: IDOT CA-6 aggregate shall conform to the following gradation requirements:

		Percent
1.	Passing 1 ½ Inch Sieve	100
1.	Passing 1 Inch Sieve	90 – 100
2.	Passing 1/2 Inch Sieve	60 – 90
3.	Passing No. 4 Sieve	30 – 56
4.	Passing No. 16 Sieve	10 – 40
5.	Passing No. 200 Sieve	4 – 12

D. Quality: The aggregate base material shall be from an approved source.

3.00 EXECUTION

3.01 INSTALLATION

A. Inspection:

1. Examine the areas and conditions under which the aggregate base course is to be placed for conditions detrimental to the proper and timely completion of the work. Do not proceed with the work until unsatisfactory conditions have been corrected in an acceptable manner.

2. The subgrade shall be compacted, graded and cut to proper lines, grades, and cross-sections to the satisfaction of the Engineer before placing of the base course.

3. Subgrade shall be protected from cold weather, base course shall not be placed on frozen

subgrade or when the atmospheric temperature is less than 35 degrees F.

B. Placing Base Course:

1. Contractor shall be responsible for maintaining lines and grades including crown and cross-slope in base course.

2. The Contractor shall be responsible for placing the correct quantity of base material to construct a base of the required finish thickness.

3. The thickness of the compacted base course shall be as shown on the drawings.

4. The maximum compacted thickness of any one layer shall not exceed six (6) inches.

   a) When specified compacted depth of base course exceeds 6 inches, the base course shall be constructed in two or more layers of approximately equal thickness.

   b) No single layer shall be less than 3 inches in thickness when compacted.

5. The mixture shall be uniformly spread in successive layers of such depth that when compacted, the base will approximate the thickness specified.

6. Immediately before spreading the aggregate, the subgrade shall be wetted as directed by the Engineer.

7. The base material shall be delivered to the site for placement with the material thoroughly mixed with water to approximate moisture content for desired compaction.

C. Compaction:

1. Maintain optimum moisture content for compacting base course material during placement shaping and compaction operations.

2. Each layer shall be compacted to not less than 95% maximum dry density per ASTM D698.

3. Required compaction shall be accomplished by a self-propelled smooth-wheeled roller, weighing not less than 5 tons, or other methods approved by the Engineer.

D. Quality Control Testing During Construction:

1. The Contractor shall engage and pay for an independent laboratory testing to inspect, test and report test results of the base course layer before further construction work is performed.

2. The Contractor is responsible for making sure the OC Subcontractor has a copy of these specifications and understands the responsibility of supplying written test results to the Engineer.

E. Acceptance Quality Control and Quality Sampling and Testing for Density:

1. Aggregate base course shall be accepted for density on a lot basis. A lot will consist of one day's production where it is not expected to exceed 2400 square yards. A lot will consist of one-half day's production where a day's production is expected to consist of between 2400 and 4800 square yards.

2. Each lot shall be divided into two equal sublots. One test shall be made for each sublot. Sampling locations will be determined by the Engineer on a random basis in accordance with statistical procedures contained in ASTM D 3665.

3. Each lot will be accepted for density when the field density is at least 100 percent of the maximum

density of laboratory specimens prepared from samples of the base course material delivered to the job site. The specimens shall be compacted and tested in accordance with ASTM 698. The in-place field density shall be determined in accordance with ASTM D 1556 or D 2167. If the specified density is not attained, the entire lot shall be reworked and/or recompacted and two additional random tests made. This procedure shall be followed until the specified density is reached.

4. In lieu of the core method of field density determination, acceptance testing may be accomplished using a nuclear gage in accordance with ASTM D 2922 using the Direct Transmission Method. The nuclear gage shall be calibrated in accordance with Annex A1. Calibration and operation of the gage shall be in accordance with the requirements of the manufacturer. The operator of the nuclear gage must show evidence of training and experience in the use of the instrument. The gage shall be standardized daily in accordance with ASTM D 2922, paragraph 8.

5. Use of ASTM D 2922 results in a wet unit weight, and when using this method, ASTM D 3017 shall be used to determine the moisture content of the material. The moisture gage shall be standardized daily in accordance with ASTM D 3017, paragraph 7.

6. If a nuclear gage is used for density determination, two random readings shall be made for each sublot.

F. Grading:

1. Base course material after compaction shall be cut to proper lines, grades, sections and cross-slopes as shown on the drawings.

2. Tolerances shall be plus or minus .1 of a foot.

3. Compacted areas that are below .1 of a foot of grade, additional material shall be brought in place, shaped and compacted to attain the proper thickness and subbase elevation.

G. Maintenance:

1. Protect newly graded areas from traffic and erosion.

2. Repair and re-establish grades in settled, eroded and rutted areas to specified tolerances.

3. Reconditioning Compacted Areas: Where completed compacted areas are disturbed by subsequent construction operations or adverse weather, scarify surface, re-shape and compact to required density prior to further construction.

H. Remove excess material, trash, debris and waste materials from the site.

END OF SECTION 321123

Intentionally Blank

DIVISION 32 – EXTERIOR IMPROVEMENTS

SECTION 321200 – PAVEMENT RESTORATION

1.00 GENERAL

1.01 SUMMARY

A. This section includes providing all labor, tools, material and equipment to saw cut, remove, and replace pavement which is damaged or disturbed during the course of the Work and as shown on the Drawings. Pavement includes, but is not limited to, roadways, curbs, gutters, ADA ramps, driveways, and sidewalks. Pavement restoration will be at least equal to the type of pavement which existed before the Work began and as required by Local, State or Federal regulations or as directed by Owner.

1.02 RELATED WORK

A. Specification Section 03300 – Cast-in-Place Concrete

1.03 REFERENCES

A. Refer to current standards:
   1. Illinois Department of Transportation (IDOT) Standard Specifications for Road and Bridge Construction

2.00 PRODUCTS

2.01 SUMMARY

A. Materials of construction for pavement restoration shall be furnished in accordance with applicable Federal, State and Local standards. The Contractor shall use materials which comply with IDOT Standards for Asphalt Pavement. Portland Cement Pavement material shall comply with Specification Section 03300.

3.00 EXECUTION

3.01 INSTALLATION

A. Saw or line cut the existing pavement as shown on Illinois Standard Specifications or as required by Local, State or Federal regulations. If saw cut location is within 2 feet of an existing joint, remove the pavement to the joint. The edges of the face of the old pavement or base shall be left vertical. Ragged edges shall be trimmed so as to provide a substantially straight line juncture between the old and new surfaces.

B. Place the pavement replacement to conform in grade to the existing streets, drives or sidewalks. The type of pavement replacement shall be as shown on the pavement replacement details in accordance with applicable Federal, State or Local standards. If there are no such applicable standards, replacement will be made to the depth and type of existing pavement.

C. Roll and tamp in place a 2-inch thick (minimum) course of bituminous material over trenches where temporary pavement is required. Remove temporary pavement prior to placing permanent pavement. The finished temporary surface shall be flush with the adjacent undisturbed surface. Maintain the temporary bituminous surface until the temporary surface is replaced.

D. Before the completion of each day's work, in traveled areas, the pipe trench shall be paved with 6 inches of stabilized base unless another method of pavement restoration is required by the authorized governing body. Final paving shall be placed over the stabilized base and overlapping each side of the trench a minimum of 12 inches and feathered to meet the existing pavement unless another method of pavement restoration is required by the authorized governing body. Final pavement shall not be placed within 20 days after the backfilling has been completed and shall be placed no longer than 45 days after the backfilling has been completed, unless otherwise ordered by the Engineer.

E. If an excavation within traveled areas is subject to repeated access prior to backfill/final pavement, then the use of steel roadway plates may be required. The use of steel roadway plates shall be in strict accordance all applicable regulations with the Federal, State, County, and/or Local Agency having jurisdiction. Steel roadway plates shall be properly secured such that they are not subject to being “dragged” from place by a braking truck or “pushed” from place by a snowplowing vehicle. When requested the Contactor shall submit load bearing calculations sealed by a Professional Engineer, licensed to practice in the applicable State, demonstrating that the steel roadway plate is properly designed and installed to accommodate HS-20 vehicular loadings.

3.02 MAINTENANCE

A. Following the certification of completion by the Engineer, the Contractor shall maintain the pavement restoration areas for a period of one year thereafter, or for such greater period as may be required by Federal, State or Local authorities. All material and labor required for such maintenance shall be supplied by the Contractor, and the Work shall be done in a manner satisfactory to the Owner at no additional cost to the Owner.

3.03 BASIS OF PAYMENT

A. Roadways and Driveways. The Work included in this Section will be paid at the Contract Unit Price per square foot (or square yard) of various pavement types at various depths. For example “Concrete Pavement – 6-inch depth” or “Asphalt Pavement – 6-inch depth” or “Driveway Pavement – 4 inch depth.” The Contract Unit Price shall include saw cutting and removing existing pavement to the limits shown on the Drawing and Illinois Standard Specifications; furnishing, installing and removing temporary pavement required; bedding; steel reinforcement; permanent pavement; and finishing complete in place conforming to the requirements of this Specification Section and/or required by Federal, State or Local agencies. Pavement removed beyond the specified limits will be at the Contractor’s expense.

B. Sidewalks and ADA Ramps. The Work included in this Section will be paid at the Contract Unit Price per square foot (or square yard) of various pavement types at various depths. For example “Sidewalk – 4-inch depth” or “ADA Accessibility Ramp – 6-inch depth.” The Contract Unit Price shall include saw cutting and removing existing pavement to the limits shown on the Drawing and Illinois Standard Specifications; furnishing, installing and removing temporary pavement required; bedding; steel reinforcement; permanent pavement; and finishing complete in place conforming to the requirements of this Specification Section and/or required by Federal, State or Local agencies.

C. Curb & Gutter. The Work included in this Section will be paid at the Contract Unit Price per linear foot for curb and gutter installed. The Contract Unit Price shall include saw cutting and removing existing pavement to the limits shown on the Drawing and Illinois Standard Specifications, bedding, steel reinforcement, curb & gutter pavement, and finishing complete in place conforming to the requirements of this Specification Section and/or required by Federal, State or Local agencies.

END OF SECTION 321200

DIVISION 32 – EXTERIOR IMPROVEMENTS

SECTION 323126 – WOVEN WIRE FENCING

1.00 GENERAL

A. The Contractor shall furnish and erect the woven wire fences and gates, complete in place, in accordance with the Drawings, as specified herein, and at the location as designated on the Drawings or established by the Engineer.

2.00 PRODUCTS

2.01 GENERAL

A. The woven wire fencing shall be comprised of woven wire, barbed wire, line posts, set posts, brace poles, gates and hardware. The fence shall be 39” high woven wire with two barb wires on top, one six inches above the woven wire, the second 18” above the woven wire forming a 60” high fence.

2.02 WOVEN WIRE (HOG WIRE)

A. The woven wire shall be 39” high zinc-coated with vertical stay wires every 6” or match dimension of existing. The top and bottom horizontal wires shall be a minimum of 9 gauge steel wire, with six 11 gauge steel wires spaced in between. The horizontal wires shall be spaced closer together at the bottom with the spaces increasing progressive toward the top. The stay wires shall be a minimum of 11 gauge steel wire extending from one horizontal wire to the next and looped around the horizontal wires to keep them evenly spaced. The horizontal wires shall be continuous, the vertical wire only long enough to reach from one horizontal wire to the next with enough to loop them around the horizontal wires. Each vertical wire shall be intertwined with the next successive one to hold each in place and give a pleasing appearance and appear to form a vertical line.

2.03 BARBED WIRE

A. Barbed wire shall be zinc coated steel. Zinc coated barbed wire shall conform to the requirements of ASTM A121-80, Class 3 Coating, and shall consist of two (2) with minimum gauge of No. 12½ gauge line wires twisted with a 4-point No. 14 gauge barbs spaced 5” apart. The weight of coating per square foot of surface shall be not less than 0.25 oz. for both line wires and barbs.

2.04 LINE POSTS

A. Line posts shall be new and match existing material as close as practical.
B. The line posts shall be steel “T” shape or wood posts. The steel “T” shape posts shall have a small projection on the face to hold the wire in place, a metal flange to help stabilize the post, and shall be painted to prevent corrosion. The steel posts shall be a minimum of 1-3/8” x 1-3/8” and 7/64” thick and no less than 6-1/2’ long.

C. The wood line posts shall be 4” x 4” wood posts, 6-1/2’ long or match existing size and shape as close as practical. The wood line posts shall be quality hardwood pressure treated with an acceptable wood preservative to preserve them.

2.05 SET POINTS

A. All the end, corner, pull posts, gate posts and the post adjacent to them shall be set posts. The set posts shall be no less than 6” x 8” x 8’ long or round posts a minimum of 7” in diameter. The rectangular set posts shall be rough cut from quality oak timber. The round set posts shall be quality lodge pole pine debarked of a similar quality as used for utility poles. The set posts shall be pressure treated with an CCA wood preservative (with a 0.4 lbs residual) to preserve the wood and extend the service life of the posts.

2.06 BRACE POLES

A. The brace poles shall be 3” x 6”, 4” x 4” or round 5” minimum diameter wood posts or 2 ½” diameter Schedule 40 galvanized steel pipe or match original size and configuration as close as practical. The rectangular wood brace poles shall be CCA treated wood the same as the posts. The round brace poles shall be lodge pole pine debarked of a similar quality as those used for utility poles. The wood brace poles shall be pressure treated with a CCA wood preservative with a 0.4 lbs residual. The brace poles shall be of the length required for the installation.

2.07 GATES

A. The gates shall be constructed of standard square tubing of sizes and dimensions shown on the plans. All open end shall have ¼” thick metal plugs welded in place. or match original size and configuration as close as practical

B. All surfaces shall be cleaned free of scale, rust, dirt, oil and water, and primed with oil base primer and two (2) coats of beige enamel.

2.08 HARDWARE

A. The staples shall be 9 gauge zinc coated steel wire fence staples 1-1/2” long. All the tie wire and brace wire shall be 9 gauge galvanized steel wire.

3.00 <u>EXECUTION</u>

A. The woven wire fencing shall be 39” woven wire with two strands of barbed wire; one 6” above the top of the woven wire, the other at 1-1/2’ from the top of the woven wire forming a 5’ high fence. There shall be a line post a minimum of every 12 feet or match existing if less, except where called out otherwise for set posts. The line posts shall be driven or set to a depth of 16 inches. The set posts shall be set two each at every horizontal bend in the fence, on each side of the gates, ends of the fence and pull points. The pull points shall be a maximum of 300’ apart. The set posts, two each place, shall be set to a minimum depth of 34” with the soil being firmly backfilled and compacted around them. Where earthen backfill does not satisfactorily stabilize the set posts, they shall be backfilled with concrete as specified in Division 3.

B. The set and line posts shall be set a maximum of 10’ apart on centers with a brace pole diagonally between each pair of set posts. The brace pole shall brace the set post at the end adjacent to the gate or at the bend as the case may be. The tension wire shall be run diagonally in the opposite direction from the brace pole and drawn up tight and stapled to hold it in place. The brace pole shall be blocked and nailed to hold it securely in place. The woven wire and barbed wire shall be drawn up tight and stapled at each barbed wire, top, bottom and every other horizontal on the woven wires to the wood posts. On the steel posts, the barbed wire top, bottom and every other horizontal wire shall be fastened with a wire clip. The wires shall be wrapped tightly around the end posts and at corners or other points where the woven wire fence ties to an existing fence. After the wires are wrapped around the set posts, they shall be looped back around themselves to hold the wires tight. The woven wire fence shall be constructed in a neat and workmanlike manner.

C. The gates shall be installed and adjusted such that they operate freely and easily and latch securely.

D. All gates shall be provided with locking devices, padlock type, and keyed alike.

E. All fence repair shall be made to the satisfaction of the land owner and meeting any easement restrictions

END OF SECTION 323126

DIVISION 32 – EXTERIOR IMPROVEMENTS

SECTION 323127 – BARBED WIRE FENCING

1.00 GENERAL

A. The Contractor shall furnish and erect the barbed wire fences and gates, complete in place, in accordance with the Drawings, as specified herein, and at the location as designated on the Drawings or established by the Engineer.

2.00 PRODUCTS

2.01 GENERAL

A. The barbed wire fencing shall be comprised barbed wire, line posts, set posts, brace poles, gates and hardware. The fence shall be five (5) strands of barbed wire 60” high fence or match existing.

2.02 BARBED WIRE

A. Barbed wire shall be zinc coated steel. Zinc coated barbed wire shall conform to the requirements of ASTM A121-80, Class 3 Coating, and shall consist of two (2) with minimum gauge of No. 12½ gauge line wires twisted with a 4-point No. 14 gauge barbs spaced 5” apart. The weight of coating per square foot of surface shall be not less than 0.25 oz. for both line wires and barbs.

2.03 LINE POSTS

A. Line posts shall be new and match existing material as close as practical.

B. The line posts shall be steel “T” shape or wood posts. The steel “T” shape posts shall have a small projection on the face to hold the wire in place, a metal flange to help stabilize the post, and shall be painted to prevent corrosion. The steel posts shall be a minimum of 1-3/8” x 1-3/8” and 7/64” thick and no less than 6-1/2’ long.

C. The wood line posts shall be 4” x 4” wood posts, 6-1/2’ long or match existing size and shape as close as practical. The wood line posts shall be quality hardwood pressure treated with an acceptable wood preservative to preserve them.

2.04 SET POINTS

A. All the end, corner, pull posts, gate posts and the post adjacent to them shall be set posts. The set posts shall be no less than 6” x 8” x 8’ long or round posts a minimum of 7” in diameter. The rectangular set posts shall be rough cut from quality oak timber. The round set posts shall be quality lodge pole pine debarked of a similar quality as used for utility poles. The set posts shall be pressure treated with an CCA wood preservative (with a 0.4 lbs residual) to preserve the wood and extend the service life of the posts.

2.05 BRACE POLES

A. The brace poles shall be 3” x 6”, 4” x 4” or round 5” minimum diameter wood posts or 2 ½” diameter Schedule 40 galvanized steel pipe or match original size and configuration as close as practical. The rectangular wood brace poles shall be CCA treated wood the same as the posts. The round brace poles shall be lodge pole pine debarked of a similar quality as those used for utility poles. The wood brace poles shall be pressure treated with a CCA wood preservative with a 0.4 lbs residual. The brace poles shall be of the length required for the installation.

2.06 GATES

A. The gates shall be constructed of standard square tubing of sizes and dimensions shown on the plans. All open end shall have ¼” thick metal plugs welded in place. or match original size and configuration as close as practical

B. All surfaces shall be cleaned free of scale, rust, dirt, oil and water, and primed with oil base primer and two (2) coats of beige enamel.

2.07 HARDWARE

A. The staples shall be 9 gauge zinc coated steel wire fence staples 1-1/2" long. All the tie wire and brace wire shall be 9 gauge galvanized steel wire.

3.00 EXECUTION

A. The barbed wire fencing shall be 5 strands of barbed wire for a 5' high fence or match existing. There shall be a line post a minimum of every 12 feet or match existing if less, except where called out otherwise for set posts. The line posts shall be driven or set to a depth of 16 inches. The set posts shall be set two each at every horizontal bend in the fence, on each side of the gates, ends of the fence and pull points. The pull points shall be a maximum of 300' apart. The set posts, two each place, shall be set to a minimum depth of 34" with the soil being firmly backfilled and compacted around them. Where earthen backfill does not satisfactorily stabilize the set posts, they shall be backfilled with concrete as specified in Division 3.

B. The set and line posts shall be set a maximum of 10' apart on centers with a brace pole diagonally between each pair of set posts. The brace pole shall brace the set post at the end adjacent to the gate or at the bend as the case may be. The tension wire shall be run diagonally in the opposite direction from the brace pole and drawn up tight and stapled to hold it in place. The brace pole shall be blocked and nailed to hold it securely in place. The barbed wire shall be drawn up tight and stapled at each barbed wire,. On the steel posts, the barbed wire shall be fastened with a wire clip. The wires shall be wrapped tightly around the end posts and at corners or other points where the woven wire fence ties to an existing fence. After the wires are wrapped around the set posts, they shall be looped back around themselves to hold the wires tight. The woven wire fence shall be constructed in a neat and workmanlike manner.

C. The gates shall be installed and adjusted such that they operate freely and easily and latch securely.

D. All gates shall be provided with locking devices, padlock type, and keyed alike.

E. All fence repair shall be made to the satisfaction of the land owner and meeting any easement restrictions

END OF SECTION 323126

DIVISION 32 – EXTERIOR IMPROVEMENTS

SECTION 329000 - FERTILIZING, SEEDING & MULCHING

1.00 GENERAL

1.01 RELATED DOCUMENTS

A. Drawings and general provisions of the Contract, including General and Special Conditions and Division 1 Specification Sections, apply to this Section.

1.02 SUMMARY

A. The Contractor shall furnish all seed, labor and materials, and perform all operations in connection with the placing, watering and firming of seeded areas, complete and in strict accordance with these specifications and applicable Drawings, and subject to the terms and conditions of the Contract. The Contractor shall seed all areas disturbed for any reason during construction.

B. Related sections include the following:

1. 312300 Excavating, Filling and Grading

2.00 PRODUCTS

2.01 SEED

A. Agricultural seed for cover crops shall comply with the requirements of the State and Local Laws. The following will be the minimum requirements in the acceptance of seed. Seed rates shall be based on Pure Live Seed (PLS) per acre. Pure Live Seed will be calculated using the following formula: **PLS = (% germination + % dormant seed) X % purity/100.** Germination tests are required for all warm and cool season grasses and legumes (excluding companion crops). Germination tests may not be older than 12 months at time of seeding, excluding the month of testing, unless otherwise permitted by the Engineer:

Table 1. Site Groupings

Site Group	Description
1	**dams, dikes, borrow areas, road cuts, and other construction areas**
2	**steep eroding land, idled or formerly cropped land affected by severe erosion**
3	**blow outs in sandy soils**
4	**acidic mine refuse such as gob areas, slurry pit areas, and/or acid overburden material**
5	**ditch bank side slopes**
6	**ditch bank spoil areas**

Table 2. Seed Mixtures

Seed Mixture	Seeding Rate PLS lbs./acre	pH Suitability	Site Groups*
Cool Season Mixtures			
Smooth Bromegrass and Alfalfa	24 and 8	6.0-7.5	1,2,5,6
Tall Fescue and Alfalfa	24 and 8	6.0-7.5	1,2,3,5,6
Tall Fescue or Smooth Bromegrass and Timothy or Redtop and Birdsfoot Trefoil	12 or 24 and 2.5 and 12	5.5-7.5	1,2,3,4,5,6
Tall Fescue or Smooth Bromegrass and Perennial Ryegrass and Alsike, or Red Clover	12 or 20 and 10 and 8	6.0-7.0	1,2,3,5,6
Tall Fescue or Smooth Bromegrass and Redtop or Timothy and Alsike, or Red Clover	12 or 24 and 2.5 and 8	6.0-7.0	1,2,3,5,6
Tall Fescue and Smooth Bromegrass and Alfalfa	12 and 12 and 8	6.5-7.5	1,2,3,5,6
Smooth Bromegrass or Tall Fescue and Perennial Ryegrass and Alfalfa	20 or 10 and 10 and 8	6.0-7.5	1,2,3,5,6
Smooth Bromegrass or Tall Fescue and Perennial Ryegrass and Birdsfoot Trefoil	20 or 10 and 10 and 12	5.0-7.0	1,2,4,5,6
Redtop	8	4.5-8.0	Dikes constructed for wetland restoration
Switchgrass 'Cave-in-Rock'	8	5.5-7.0	1,2,6
Switchgrass 'Cave-in-Rock' and Big Bluestem And Indiangrass	2 and 6 and 6	5.5-7.0	1,2,6
Canada Wildrye and Western Wheatgrass	10 and 10	5.0-8.0	1,2,4,5,6
Canada Wildrye and Switchgrass 'Cave-in-Rock'	10 And 6	5.0-8.0	1,2,4,5,6
* Site Groups described in Table 1.			

Table 3. Seed Mixtures for Grassed Waterways***

Seed Mixture*	Seeding Rate PLS lbs./acre	SITE SUITABILITY		Remarks	Retardance Height Range, inches				
		Well Drained	Poorly Drained		Unmowed Retardance	B	C	D**	E**
Smooth Bromegrass and Redtop or Timothy	20 and 4 or 4	X			B	16-33	7-16	3-7	0-3
Smooth Bromegrass and Tall Fescue	8 and 16	X	X		B	16-33	7-16	3-7	0-3
Tall Fescue	20	X	X		B	16-33	7-16	3-7	0-3
Smooth Bromegrass and Perennial Ryegrass	10 and 10	X	X		B	16-30	7-16	3-7	0-3
Tall Fescue and Redtop or Timothy	16 and 4 or 4	X	X		B	16-30	7-16	3-7	0-3
Kentucky Bluegrass	35	X		Suitable for areas where close mowing is desired.	C	---	5-12	2-5	0-2
Kentucky Bluegrass and Red Fescue	4 and 20	X	X	Suitable for areas where close mowing is desired. Adapted to shady sites.	C	---	6-12	2-6	0-2
Redtop	8		X		B	16-30	7-16	3-7	0-3
Canada Wildrye and Western Wheatgrass	10 and 10	X	X		B	16-30	7-16	3-7	0-3
Tall Fescue and Perennial Ryegrass	12 and 10	X			B	16-27	7-16	3-7	0-3
Kentucky Bluegrass and Perennial Ryegrass	20 and 10	X	X	Suitable for areas where close mowing is desired.	C	---	6-13	2-6	0-2

* Use planting dates for cool season species for all mixtures in Table 2.
** D and E retardance for all mixes (except the three with Kentucky bluegrass) shall be used for stability design purposes ONLY. Maintenance at these heights after establishment will result in loss of vegetation.
***The seed mixtures included in the table above may also be used for grade stabilization structures constructed to provide a stable outlet to the grassed waterway(s).

2.02 COMMERCIAL FERTILIZER

A. Shall conform to the applicable state fertilizer laws. It shall be uniform in composition, dry and free flowing and shall be delivered to the site in the original unopened containers, each bearing the manufacturer's guaranteed analysis. Any fertilizer which becomes caked or otherwise damaged, making it unsuitable for use, will not be accepted. The fertilizer requirements can be found below in Table 4.

2.03 MULCH

A. Vegetative mulch shall be straw from stalks of oats, wheat, rye or barley, or other foliage from plants as approved by the Engineer. The straw shall be relatively free from noxious and undesirable seeds, relatively free from foreign materials and dry enough to evenly spread. The mulch requirements can be found below in Table 4.

Table 4. Fertilizer, Companion Crop and Mulch Requirements.

Site Grouping	Fertilizer (lbs./acre) N-P2 O5 -K20	Companion Crop		Mulch	Remarks
		Oats1	Cereal Rye or Wheat2		
1	120-120-120	1 bu./acre	20 lbs./acre	The designer with engineering job approval authority is responsible for determining if mulching is required for the site specific engineering practice.	
2,3,5	120-120-120	1 bu./acre	20 lbs./acre	Yes	For site groups 2 and 3, incorporate manure mixed with straw or sawdust bedding where available
4-Gob or Slurry	120-300-180	1 bu./acre	20 lbs./acre	Yes	
4-Acid overburden	60-120-120 at cover crop establishment 50-180-60 at permanent cover establishment	1 bu./acre	20 lbs./acre	Yes	
6	60-60-60	1 bu./acre	20 lbs./acre	The designer with engineering job approval authority is responsible for determining if mulching is required.	
Grassed waterways	120-120-120	1 bu./acre	20 lbs./acre	The designer with engineering job approval authority is responsible for determining if mulching is required for specific grassed waterways.	
Temporary Cover (45-365 days)	60-60-60 (Note: Fertilizer is not required for seedings planned to provide < 90 days of protection	**Temporary Cover** Oats, wheat, or cereal rye at 90 lbs/acre Sudangrass or sorghum-sudan hybrids at 20 lbs./acre		No	Only wheat or rye will be used where the temporary cover period includes the winter months. Sudangrass or sorghum-sudangrass can be used where the planting date is between May 1 – August 1.
Temporary Cover (>-365 days)	60-60-60	Annual or perennial ryegrass 20 lbs./acre		Yes	

1. Oats may be used for seedings in planted early spring to August 15.
2. Wheat or Cereal Rye must be used for seedings planted after August 15 but may be used for early spring seedings also.

3.00 EXECUTION

3.01 TIME OF PLANTING

A. Seeding shall be performed only during the seasons when satisfactory growing conditions exist. The planting operation shall not be performed during times of drought or other unfavorable climatic conditions.

3.02 PLANTING PROCEDURES

A. The areas to be seeded shall be prepared immediately prior to the placing of the seed by thorough cultivating, smoothing, removal of clods, surface stone 1-inch diameter or larger, and weeds. Soil shall be in a moist condition prior to placing seed.

B. Grades on the areas to be seeded shall be maintained in true, even and compacted conditions so as to prevent the formation of depressions. Areas that have washed or eroded shall be brought to grade and compacted thoroughly by the Contractor at his own expense prior to placing the seed. No grading shall be done when the soil is in a muddy or frozen condition.

3.03 APPLYING FERTILIZER

A. The previously described fertilizer shall be applied to the finished grade by approved spreader at the minimum rate of 250 lbs. per acre and shall be thoroughly raked into the top 2 inches of the surface before planting of seed.

B. Lime shall be applied into the top 2 inches of the soil at a rate of 2,000 lbs. per acre by disking, harrowing or raking prior to the planting of seeds.

3.04 PLANTING SEED

A. Seeding Schedule: Seeding shall be performed only during the specific time periods as stated hereafter:

Table 5. Acceptable Planting Dates by Plant Suitability Zones

TYPE OF SEEDING	PLANT SUITABILITY ZONE1	COOL SEASON SPECIES	WARM SEASON SPECIES2
Spring	I	Late Winter - June 1	Late Winter - June 15
	II	Late Winter - May 15	Late Winter - June 5
	III	Late Winter - May 15	Late Winter - June 1
Late Summer	I	August 1 - September 1	Not Recommended
	II	August 1 - September 10	Not Recommended
	III	August 1 - September 20	Not Recommended
Dormant	I	November 1 - Freeze-up	November 1 - Freeze-up
	II	November 15 - Freeze up	November 15 - Freeze up
	III	November 15 - Freeze up	November 15 - Freeze up
Frost	I	February 1 - March 15	February 1- March 15
	II	February 1 - March 1	February 1 -March 1
	III	February 1 - March 1	February 1 -March 1
1 - Refer to the “Plant Suitability Zones” map locate in Section I, IL-FOTG-Climatic Data **2 -** Dates to be used when warm and cool season natives are planted in mixture.			

B. Seed mixed in proportions as hereinbefore specified shall be broadcast by approved sowing equipment at the rate of lbs. per acre. The seed shall be covered to an average depth of 1/2 inch by means of a brush harrow, spike tooth harrow, chain harrow, cultipacker, or other approved device.

C. Mulch shall be evenly distributed at a rate of 2 tons per acre over the seeded area within 24 hours following seeding. The mulch shall be crimped into the soil to reduce movement due to wind or erosion. After mulching, precautions to prohibit foot or vehicular traffic over the area should be taken.

D. When delays in operations carry the work beyond the most favorable planting season for the grasses designated, or when conditions are such, by reason of drought, high winds, excessive moisture, or other factors, that satisfactory results are not likely to be obtained, the seeding operation shall be stopped and work shall be resumed only when conditions are favorable again or when approved alternate or corrective measures and procedures have been put into effect. If inspection during seeding operations or after there is a show of green indicates that areas have been skipped, the sowing of additional seed on these areas will be required.

E. The seeded areas will be inspected for acceptable grass coverage and will be acceptable when the grasses designated are growing and are in good condition, and no area more than 1/2 of one percent of the total areas shall be bare, of which no single areas shall be more than three square feet in area. Any area larger than this will not be acceptable and shall be reseeded.

3.05 MAINTENANCE

A. All seeded areas shall be kept in a healthy, growing condition by watering, mowing, rolling, trimming, edging, etc., until completion and acceptance by the Owner.

B. Reconditioning Existing Areas:

1. Existing areas damaged by the Contractor's operations (e.g. Contractor's storage areas) including storage of materials and equipment and movement of vehicles are to be reconditioned. Contractor is also to recondition existing grass areas were minor regrading is required.

2. Contractor is to provide fertilizer, seed, lime and mulch as required for reconditioned areas as well as new soil as may be required to fill low spots to finished grade.

3. Contractor is to remove diseased and unsatisfactory grass areas. These grasses shall not be buried in the soil at a depth less than 24". Contractor shall remove topsoil containing foreign materials resulting from the contractor's operation including oil drippings, stone, gravel, and other materials as directed by the Owner's Representative.

4. Where substantial grass remains (but is thin) the Contractor shall mow, rake, aerate (if compacted), fill low spots, remove humps, cultivate, fertilize, seed and mulch in accordance with these specifications.

C. Over winter protection: If the site cannot be seeded during the fall planting period, immediately following the grading operations the Contractor shall be required to stabilize the project site with either straw mulch or a temporary seed crop of wheat or oats. Such operations, if required, will be performed at no additional cost to the Owner.

1. If the Contractor chooses to mulch the project site, he shall do so at the same rate and by the same methods as previously described in this section for mulching operations.

2. If the Contractor chooses to sow a temporary seed crop, he shall submit proposed rates of application to the Consultant for approval. All seeding shall be complete prior to November 1st.

3. The permanent grass species shall not be drilled directly into the mulched or temporary seeded areas. Temporary mulch or grass species shall be incorporated to a depth of 6" by disking, harrowing or other approved methods or shall be disposed of in a manner approved by the Owner's

Representative. All operations previously described under this section for seedbed preparation, liming, and fertilization shall be performed prior to Spring seeding.

4. The seedhead of the temporary crop shall not be allowed to mature. Should the Contractor be unable to incorporate this crop prior to seedhead maturity, he should mow the crop to prevent maturity. Should wet conditions not allow the contractor to mow the crop and the seedhead matures, the contractor shall combine the crop to prevent a volunteer cereal crop.

D. Temporary Stabilization: Topsoil stock piles and disturbed portions of the site where construction activity temporarily ceases for at least 21 days shall be stabilized with temporary seed or mulch no later than 14 days from the last construction activity in that area. The temporary seed crop shall be wheat or oats. Such operations, if required, will be performed at no additional cost to the Owner.

1. If the Contractor chooses to mulch the project site, he shall do so at the same rate and by the same methods as previously described in this section for mulching operations.

2. If the Contractor chooses to sow a temporary seed crop, he shall submit proposed rates of application to the Engineer for approval.

3. The permanent grass species shall not be drilled directly into the mulched or temporary seeded areas. Temporary mulch or grass species shall be incorporated to a depth of 6" by disking, harrowing or other approved methods or shall be disposed of in a manner approved by the Owner's Representative. All operations previously described under this section for seedbed preparation, liming, and fertilization shall be performed prior to Spring seeding.

4. The seedhead of the temporary crop shall not be allowed to mature. Should the Contractor be unable to incorporate this crop prior to seedhead maturity, he should mow the crop to prevent maturity. Should wet conditions not allow the contractor to mow the crop and the seedhead matures, the contractor shall combine the crop to prevent a volunteer cereal crop.

E. The Contractor shall protect all seeded areas from damage of any sort due to operations of other contractors and trades, and trespassers. Maintenance shall commence immediately following seeding operations and shall continue throughout the guarantee period. Contractor shall repair or replace damaged areas as directed by the Engineer.

END OF SECTION 329000

Intentionally Blank

DIVISION 33 - UTILITIES

SECTION 330500 – UTILITY MATERIALS

1.00 GENERAL

1.01 DESCRIPTION OF WORK

A. The work to be performed under this section consists of furnishing all materials, equipment, supplies and tools necessary for the construction of the raw water piping or process piping, included in this Contract, complete with valves, accessories and all necessary components.

B. All work shall be completed in accordance with the project plans and details.

C. Applicable Sections: 312300 Excavating, Filling and Grading.

1.02 QUALITY ASSURANCE

A. Work shall conform to all local building codes.

B. All codes referred to are those listed by:

1. American Society for Testing Materials (ASTM).
2. American Water Works Association (AWWA).
3. American Standards Association (ASA).
4. Commercial Standards (CS).
5. American Association of State Highway & Transportation Official (AASHTO).
6. Federal Specifications.
7. Standard Specification for Water and Sewer Construction in Illinois.
   a) Codes and standards referred to above shall be the current edition that is being used at the time of bid opening.

C. All materials and equipment used on this work shall be new, of the best quality and shall meet the requirements of these specifications. Materials shall be sampled and tested in accordance with current ASTM Specifications or such others as specified hereinafter. The Contractor will be required to furnish certificates of conformance to ASTM or other applicable specifications. Materials shall be stored in such a manner that their conditions are still equivalent to new when installed.

D. Submittals on pipe, valves and other accessories shall include manufacture, pressure class, materials of construction, reference AWWA or ASTM Standards the equipment complies with, and catalog cuts or shop drawings showing layout dimensions.

E. Whenever in these specifications reference is made to the requirements of the ASTM AWWA, ASA, or other standard specifications, it shall be understood that references are made to the latest modifications or revisions of such specifications.

F. All material to be used in this work will be inspected before being placed and all rejected material must be removed immediately and not used in the work under this contract. Any material installed or placed without inspection shall be removed and replaced with new materials if so directed by the Inspector.

G. The Contractor shall be required to furnish such laborers as may be necessary to aid the Inspector in the examination and culling of material.

H. The Contractor shall pay for all tests required by the specifications. Such tests shall be performed by a competent independent laboratory approved by the Engineer on test specimens selected by the Contractor under the direct supervision of the Engineer. Copies of all test results shall be submitted to the Engineer directly from the testing laboratory.

2.00 PRODUCTS

2.01 DUCTILE IRON PIPE

A. Ductile iron pipe shall conform to ANSI/AWWA C150/A.21.50 and ANSI/AWWA C151/A21.51 or ANSI/AWWA C115/A21.15 for flanged pipe. Minimum thickness class shall be Pressure Class 200 or Pressure Class 300, as specified on the plans, and Class 53 for flanged pipe. The pipe shall be manufactured from a grade of iron having a minimum mechanical property of 60,000 psi tensile strength, 42,000 psi yield strength, and a minimum of ten percent (10%) elongation.

B. Mechanical joints or push-on joints conforming to ANSI Spec. A21.51 or A21.11 AWWA for all buried pipe unless otherwise specified or indicated.

C. Flanged joints shall be used for all interior and exposed exterior pipe except where otherwise specified or indicated, conforming to ANSI/AWWA C115/A21.15.

D. Restrained ductile iron pipe shall be similar to HDSS, or approved equal for pipe sizes 4" and larger. Field Lok style gaskets are not an allowed equal. Restrained ductile iron pipe for pipe sizes smaller than 4" shall be mechanical joint with retainer gland.

E. Water line shall be cement-lined and seal-coated in conformance with ANSI Spec. A21.4 and AWWA C104. Sewer pipe shall also be cement-lined and seal coated.

F. All exterior surfaces of ductile iron pipe shall have a bituminous coating of either coaltar or asphalt base at least one mil thick and an exterior zinc coating per ISO 8179-1, Ductile Iron Pipes-External Zinc-based Coating-Part 1: Metallic Zinc with Finishing Layer (ISO 2004).

G. Fittings: Furnish ells, tees, reducers, wyes, couplings, crosses, transitions and end caps and plugs of the same type and class of material as the ductile iron pipe, or of material having equal or superior physical and chemical properties as acceptable to the Engineer.

1. Conform to ANSI A21.10 with a 350 psi pressure rating.

2. Fittings for pipe with mechanical joints shall have mechanical joints.

3. Include all specials, taps, plugs, flanges, adapters and wall fittings, as required.

H. Couplings:

1. Furnish where indicated or required to make corrections.

2. Coupling material shall be iron for joining ductile iron pipe.

3. Couplings shall be solid-sleeve type with mechanical joint conforming to one of the following:

a) Ford Style FCI, Ford Meter Box Co., Wabash, Indiana.
b) Dresser Style 153, Dress Mfg. Division, Bradford, PA.
c) Or equal.

4. Bodies, rings, glands and bolts shall be ductile iron.

5. Sleeves shall be without pipe stop.

I. Gaskets and Bolting Materials:

1. Provide all gaskets, bolts, lubricants and other accessories required to install pipe, fittings and specials, complete and ready for service.

2. Gaskets for flanged joints: Conform to ANSI B16.21, 1/8" thick full face red rubber.

3. Bolts for flanged joints: Conform to ASTM A242. Nut and bolt heads shall be hexagonal.

2.02 PVC PIPE

A. PVC pipe shall be manufactured and supplied in accordance with AWWA C900.

B. PVC pipe for potable water use shall meet the requirements of NSF 61.

C. Pipe shall have lay lengths between 14 and 22 feet unless otherwise specified by the Owner.

D. The pipe shall be made of PVC compound having a cell classification of 12454 in accordance with ASTM D1784.

E. Pipe shall be homogenous throughout, free of voids, cracks, inclusions, and other defects.

F. Pipe shall have markings at intervals of 5ft or less including:

1. Nominal pipe size and
2. OD base (e.g. CIOD or IPS)
3. PVC
4. Dimension ratio
5. Pressure class in psi
6. Hydrostatic integrity test pressure
7. AWWA designation
8. Pipe Manufacturer's name or trademark
9. Production run record or lot code
10. Mark of certifying agency (for potable water service) or "NOT FOR POTABLE USE" (for non-potable water service)
11. Maximum allowable axial joint deflection in degrees

G. Pipe for potable water use shall be blue, yellow, or white in color. Pipe for other non-potable water uses shall be green or white in color.

H. Pipe outside diameters shall be equal to those of cast iron unless otherwise specified by the Owner.

I. Pipe shall be supplied to meet the external loading requirements of the project as follows:

1. Designed for a Type 1 trench in accordance with AWWA C605
2. Maximum calculated deflection of 5%
3. Live loads as calculated per AWWA M23 based on the profile shown on the plans
4. Depth of cover as shown on the plans
5. Trench width as shown on the plans
6. Modulus of soil reaction (E'), bedding constant (K), and soil density (γ) shall be based on design and site conditions.

J. Fittings

1. Fittings shall be supplied as ductile iron fittings in accordance with AWWA C110 and/or C153.
2. See 2.01.G-2.01.I.
3. All water main 24” diameter and larger shall have fittings restrained by use of restrained joint pipe for the lengths indicated on the Drawings on both sides of the fitting.
4. No concrete thrust block will be required in this scenario.

K. Joints

1. Joints shall be gasket, bell and spigot and push-on type conforming to ASTM D3139.
2. Gasket materials shall meet the requirements of ASTM F477.
3. Joint lubricant shall be approved by the Pipe Manufacturer, water soluble, non-toxic, and NSF approved for potable water applications.
4. Restraining joints against thrust shall be accomplished by either integral joint restraint systems provided by the Pipe Manufacturer or external restraint systems see L below. Fusible PVC is not allowed unless specifically called for on the plans. Restrained joint pipe for directional bore or through casing shall be fusible PVC as called out on the plans.
5. Size and type of restraint will depend on pressures, pipe size, type of fitting/appurtenance, profile, soil type, and depth of cover. Contractor shall ensure that all external joint restraint systems are installed correctly including appropriate torquing of bolts.
6. Thrust forces will be calculated as per AWWA M23 manual.

L. Restrained Joint

1. Pipe connected to fittings and marked as restrained joint shall either be Certa-Lok or equal restraint system or utilize a Ford Uni-Flange Series 1350 or approved equal for all joints to form a continuous length of pipe as shown on the plans. Fusible PVC is not allowed unless specifically called for on the plans. Restrained joint pipe for directional bore or through casing shall be fusible PVC as called out on the plans.

M. Fusible PVC

1. Shall be blue in color
2. Shall be butt fused joints
3. Following all written manufacturer guidelines
4. Post Construction Submittal
   a) Fusion Technician
   b) Approved datalogger device reports
   c) Machine Size
   d) Job Identification
   e) Fusion Joint Number

f) Fusion, Heating, and Drag Pressure Settings

g) Heat Plate Temperature

h) Time Stamp

i) Heating and Cool Down / Time of Fusion

j) Ambient Temperature

2.03 HIGH DENSITY POLYETHYLENE (HDPE) PIPE, FITTINGS AND JOINING/FUSION

A. This specification covers the material (pipe and fittings), joining methods and general installation practice for high density polyethylene pipe (HDPE) piping systems for water and fiber optical conduit use as indicated on the Drawings.

B. The standards and documents listed below may apply to the materials and practices in this specification. In the event of a conflict, the requirements of this specification prevail. Unless otherwise specified, references to documents shall mean the latest published edition of the referenced document in effect at the project bid date.

1. ANSI/AWWA C901 Polyethylene (PE) Pressure Pipe and Tubing, ½ In. (13 mm) Through 3 In. (76

2. mm) for Water Service

3. ANSI/AWWA C906 Polyethylene (PE) Pressure Pipe and Fittings, 4 In. (100 mm) Through 63 In.(1,600 mm), for Water Distribution and Transmission

4. ANSI/AWWA C651 Standard for Disinfecting Water Mains

5. AWWA M55 Manual of Water Supply Practices, PE Pipe–Design and Installation
Plastic Pipe Institute PPI

6. PPI Handbook of Polyethylene Pipe – 2009 (2ndEdition)

7. PPI Municipal Advisory Board (MAB) Generic Electrofusion Procedure for Field Joining of 12 Inch and Smaller Polyethylene (PE) Pipe

8. PPI Material Handling Guide for HDPE Pipe and Fittings

9. PPI TR-33 Generic Butt Fusion Joining Procedure for Polyethylene Gas Pipe

10. PPI TR-34 Disinfection of Newly Constructed Polyethylene Water Mains

11. PPI TR-38 Bolt Torque for Polyethylene Flanged Joints

12. PPI TN-42 Recommended Minimum Training Guidelines for PE Pipe Butt Fusion Joining Operators for Municipal and Industrial Projects

13. PPI TR-46 Guidelines for Use of Mini-Horizontal Directional Drilling for Placement of High Density Polyethylene Pipe

ASTM

1. ASTM F 585 Standard Guide for Insertion of Flexible Polyethylene Pipe Into Existing Sewers

2. ASTM F 714 Standard Specification for Polyethylene (PE) Plastic Pipe (SDR-PR) Based on Outside Diameter

3. ASTM F 905 Standard Practice for Qualification of Polyethylene Saddle-Fused Joints

4. ASTM F 1055 Standard Specification for Electrofusion Type Polyethylene Fittings for Outside Diameter Controlled Polyethylene and Crosslinked Polyethylene (PEX) Pipe and

5. ASTM F 1290 Standard Practice for Electrofusion Joining Polyolefin Pipe and Fittings

6. ASTM F 1962 Standard Guide for Use of Maxi-Horizontal Directional Drilling for Placement of Polyethylene Pipe or Conduit under Obstacles, Including River Crossings

7. ASTM F 2164 Standard Practice for Field Leak Testing of Polyethylene (PE) Pressure Piping Systems Using Hydrostatic Pressure

8. ASTM F2206 Standard Specification for Fabricated Fittings of Butt-Fused Polyethylene (PE) Plastic Pipe, Fittings, Sheet Stock, Plate Stock, or Block Stock

9. ASTM D 2321 Standard Practice for Underground Installation of Thermoplastic Pipe for Sewers and Other Gravity-Flow Applications

10. ASTM F 2620 Standard Practice for Heat Fusion Joining of Polyethylene Pipe and Fittings

11. ASTM D 2683 Standard Specification for Socket-Type Polyethylene Fittings for Outside Diameter-Controlled Polyethylene Pipe and Tubing

12. ASTM D 2737 Standard Specification for Polyethylene (PE) Plastic Tubing

13. ASTM D 2774 Standard Practice for Underground Installation of Thermoplastic Pressure Piping

14. ASTM F 2880 Standard Specification for Lap-Joint Type Flange Adapters for Polyethylene Pressure Pipe in Nominal Pipe Sizes 3⁄4 in. to 65 in.

15. ASTM F 3124 Standard Practice for Data Recording the Procedure Used to Produce Heat Butt Fusion Joints

16. ASTM D 3261 Standard Specification for Butt Heat Fusion Polyethylene (PE) Plastic Fittings for Polyethylene (PE) Plastic Pipe and Tubing

17. ASTM D 3035 Standard Specification for Polyethylene (PE) Plastic Pipe (DR-PR) Based on Controlled Outside Diameter

18. ASTM D 3350 Standard Specification for Polyethylene Plastics Pipe and Fittings Materials

19. ASTM F 2160 Telecommunications

C. Resin and Material Requirements

1. All material shall be manufactured from a PE 4710 resin listed with the Plastic Pipe Institute (PPI) as TR-4. The resin material shall meet the specifications of ASTM D 3350 with a minimum cell classification of 445474C. HDPE pipe and fittings shall contain no recycled compounds except that generated in the manufacturer's own plant from resin of the same specification from the same raw material. HDPE products shall be homogeneous throughout and free of visible cracks, holes, foreign inclusions, voids, or other injurious defects.

D. HDPE Pipe

1. Pipe shall be made of HDPE material with a minimum material designation code of PE4710 and with a minimum Cell Classification as noted in 2.01.A. The polyethylene compound shall be

suitably protected against degradation by ultraviolet light by means of carbon black of not less than 2 percent. The manufacture of the HDPE resin shall certify the cell classification indicated.

2. Pipe sizes 3” and large shall have a manufacturing standard of ASTM F 714, while pipe smaller than 3” shall be manufactured to the dimensional requirements listed in ASTM D 3035. Class is provided on the plans and pipe shall be CIOD outside diameter based.

3. Pipe for water shall meet AWWA C901 (1/2” to 3”) or AWWA C906 (4” to 63”), and shall be listed as meeting NSF-61.

4. Pipe for fiber optic shall be 1.25” DR 11

5. When required by the owner, pipe shall be color coded for the intended service. The color coding shall be permanently co-extruded stripes on the pipe outside surface as part of the pipe’s manufacturing process. Color coding shall be as follows:
   a. Sewer – green
   b. Water – blue
   c. Fiber Optic Conduit – orange

E. HDPE Fittings

1. Butt Fusion Fittings- Fittings shall be made of HDPE material with a minimum material designation code of PE4710 and with a minimum Cell Classification as noted in 2.01.C. Fittings shall have a minimum pressure rating equal to or greater than the pipe to which they are joined unless otherwise specified on the plans or accepted by owner/engineer. All fittings shall meet the requirements of AWWA C901 or C906.

   a. Molded fittings shall comply with the requirements of ASTM D 3261.
   b. All fabricated elbows, tees, reducing tees and end caps shall be produced and meet the requirements of ASTM F 2206, as manufactured by ISCO Industries, Inc or other approved manufacturer holding an ISO 9001 quality system certificate. Each fitting will be marked per ASTM F 2206 section 10 including the nominal size and fitting EDR, which will meet or exceed the pipe DR identified for the project. Fabricated fittings shall be manufactured using a McElroy DataLogger or equal to record fusion pressure and temperature, and shall be stamped with unique joint number that corresponds to the joint report. A graphic representation of the temperature and pressure data for all fusion joints made producing fittings shall be maintained for a minimum of 5 years as part of the quality control and will be available upon request of owner. Test results to validate ASTM F 2206 section 7.3 and 9 shall be provided to owner or owner’s representative upon request.
   c. Socket fittings shall meet ASTM D 2683.

2. Electrofusion Fittings - Fittings shall be made of HDPE material with a minimum material designation code of PE 4710 and with a minimum Cell Classification as noted in 2.03.C. Electrofusion Fittings shall have a manufacturing standard of ASTM F1055. Fittings shall have a minimum pressure rating equal to or greater than the pipe to which they are joined unless otherwise specified on the plans. For potable water systems, all electrofusion fittings shall have AWWA approval.

3. Bolted Connections- Flanges and MJ Adapters shall be fused onto the pipe and have a minimum pressure rating equal to or greater than the pipe unless otherwise specified on the plans.
   a. Metallic back-up rings (Van-Stone style lap joint flanges), shall have a radius on the inside diameter of the bore so as to be compatible with HDPE Flanges. Back up rings shall have bolt pattern that will mate with AWWA C207 Class D (generically known as 150 pound patterns).
   b. Flange assemblies shall be assembled and torqued according to PPI TN-38, “Bolt Torque for Polyethylene Flanged Joints.”
   c. Where shown on the drawings, 4" and larger transitions to mechanical joint fittings and valves shall be accomplished using a MJ Adapter with kit. The D.I./HDPE mechanical joint adaptor shall consist of an HDPE mechanical joint transition fitting, rubber gasket, a mechanical joint backup drive ring, and Corten mechanical joint tee bolts.

F. Mechanical Fittings: The use of mechanical coupling and saddles shall be approved by the owner or engineer prior to installation. Mechanical Fittings shall be designed for use and compatible with HDPE pipe, including SS stiffeners when required by manufacturer. Mechanical fittings shall have a pressure rating equal to or greater than the pipe.

1. Fittings can be either HDPE with SDR a minimum rating consistent with the pipe or can be ductile iron utilizing welded MJ Adapter with the same SDR a minimum rating consistent with the pipe.

2. Ductile iron fittings shall be as specified in 2.01.G to 2.01.I.

G. Fusion Unit Requirements

1. All Fusion Equipment, whether new or used, rented or owned, shall comply with the requirements of ISO 12176-1 “Equipment for Fusion Jointing Polyethylene Systems”.

2. If the contractor owns butt fusion equipment, the equipment must be serviced within 3 months prior to use for this project. The machine must be environmentally friendly and in satisfactory working order. The hydraulic system must be leak free. The pressure gage and thermometer must be checked for accuracy. For projects with pipe quantities of 5000’ or longer, the fusion equipment should be serviced by a Authorized Service and Repair Center with at least one Certified Master Mechanic on staff within 3 months from the first fusion on the project.

3. Rental Fusion Equipment must be maintained by a Authorized Service and Repair Center with at least one Certified Master Mechanic on staff. When requested by owner or his authority, an inspection report detailing the components inspected prior to arrival at jobsite will be provided.

H. Approved Suppliers

4. All Pipe, Fittings, and Fusion Equipment shall be provided by one supplier. Approved suppliers are ISCO Industries, Inc. or approved equal.

2.04 MECHANICAL JOINT RESTRAINT

A. The mechanical joint restraint shall be designed for use on cast iron or ductile iron piping. The unit shall be provided with set screws giving restraint against the pressure force. It shall be Series 1100 Megalug, Series 3000 Stargrip or approved equal.

B. The mechanical joint restraint shall be designed for use on PVC piping. The unit shall be provided with set screws giving restraint against the pressure force. It shall be Series 2000PV Megalug, 4000HD Stargrip, or approved equal.

2.05 VALVES

5. Resilient Wedge Gate Valves:

i. Size 30” and 36” gate valves shall be non-rising stem, ductile-iron body and OS&W resilient wedge gate valves, Model 7000 Series manufactured in the USA by M&H Valve Company, Mueller, Clow, American Flow Control, or approved equal. Valves shall be supplied with a spur gear or bevel gear actuators as specified on the plans. These valves are manufactured in full compliance with ANSI/AWWA C515 standards for water supply service. Valves shall be rated for 250 psig, working pressure, and shell strength tested at 500 psig. Mechanical joint bell dimension shall conform to ANSI/AWWA C111/A21.11. All machined, interior and exterior surfaces of the valve shall be coated with an inert, thermosetting epoxy resin to provide a corrosion-resistant coating conforming to performance requirements of ANSI/AWWA C550 standard. Valves shall be supplied with EFDM wedges. The temperature rating shall be 33 to 125 degrees F per AWWA C515 standards.

ii. Size 4”-12” gate valves shall be non-rising stem configuration, ductile-iron body, resilient wedge gate valves, Model 7000 Series manufactured in the USA by M&H Valve Company, Mueller, Clow, American Flow Control, or approved equal. Valves in a vault or building shall be supplied with a handwheel operator unless otherwise indicated on the drawings. Buried valves shall be supplied with 2-inch nut. These valves are manufactured in full compliance with ANSI/AWWA C515 standards for water supply service. Valves shall be rated for 250 psig, working pressure, and shell strength tested at 500 psig. Flanged end connections shall conform to the MSS standard practice SP-60. All machined, interior and exterior surfaces of the valve shall be coated with an inert, thermosetting epoxy resin to provide a corrosion-resistant coating conforming to performance requirements of ANSI/AWWA C550 standard. Valves shall be supplied with EFDM wedges. The temperature rating shall be 33 to 125 degrees F per AWWA C515 standards.

iii. Valve ends shall be compatible with the pipe in which they are installed No “push on” joints will be allowed.

iv. All valves shall open left (counterclockwise) and have an operating nut capable of being turned by a standard gate valve key for buried valves and a handwheel for exposed valves.

v. Each buried valve shall have a cast-iron (bituminous coated) valve box. Valve box shall be two-piece, screw type, 5 1/4" shaft, cast-iron collar and lid and shall be of the length suited to the valve depth.

vi. All valves with a bury depth in excess of 6’ shall have an extension stem installed. Stem extensions shall be Mueller A-26441 or approved equal, or Mueller A-26440 or approved equal for applications with handwheel actuators.

B. **VALVE OPERATORS**

1. Valves shall be available with field interchange manual actuators as required and as shown on the drawings.

2. The manual valve operators shall be rotary manual actuators utilizing a handwheel. The manual actuator shall be cast iron construction with a valve position indicator utilizing enclosed construction. Each manual operator will provide an adjustable open and closed position stop with provision to prevent accidental adjustment changes.

C. **VALVE BOXES**

1. Valve boxes shown on the drawings for 4" and larger sizes shall be cast iron, buffalo type, 2-piece screw type with 5-1/4" shaft of a length suited to the valve depth. The cast iron lid shall have the word "water", or "drain" cast in it to suit the service of the valve. The base of the boxes shall be round and of the proper size for the valves.

D. **LOCATE WIRE**

1. Copper tracer wire shall be installed with all raw and finished water main. The wire shall be copper-clad steel wire coated with HDPE and shall be connected to all valves and brought up into each valve box (on the exterior of the box and tucked into saw slit near top of box.) and shall be connected to all hydrants and service meter pits, creating a continuous wire throughout all water main and appurtenances. All splices of tracer wire shall utilize direct bury splice kits Model 3WB-01 by Copperhead Industries or approved equal. During installation of the connector, the CONTRACTOR shall tie the tracer wire into a knot and leave approximately 4 inches to be inserted into the connector per manufacture’s specifications. The CONTRACTOR shall install tracer wire Model 1430HS by Copperhead Industries or approved equal for water main installed by trenching/open cut and Model 1245EHS by Copperhead Industries or approved equal for water main installed by directional boring. Tracer wire shall be properly grounded at all dead ends and stubs. Grounding of tracer wire shall be achieved by use of a drive-in magnesium grounding anode rod with a minimum of 20 feet of #14 HDPE copper clad wire connected to anode (minimum weight

of 1.0 pound) specifically manufactured for this purpose and buried at the same elevation as the utility. The grounding rod shall be Model ANO-14 by Copperhead Industries or approved equal.

2. Substantial completion will not be issued to the CONTRACTOR until it has been verified by the OWNER that all tracer wire is continuous and can be field located with the OWNER's locating equipment.

E. HYDRANT

1. The hydrant shall have male connections with National Standard hose coupling threads. The opening of all hydrants shall be counterclockwise. An arrow shall be cast or stamped on the top indicating the direction to open. The operating nut shall be National Standard pentagon. The main valve opening shall be designed so that removal of all working parts can be accomplished without excavating. Furthermore, the main valve assembly, drain ring, and drain ring housing shall be connected to the shoe by drain ring housing bolts, allowing easy maintenance, repair, or replacement of the entire barrel assembly without water shut-off. CONTRACTOR shall provide all necessary reducers and/or enlargers for complete connection and shall be included in the bid price for flushing/fire hydrants.

2. Hydrants shall be set at such elevations that the connecting pipe will not have less cover than the main water main. Blocking shall be as described on the drawings. Not less than 7 cubic feet of clean gravel shall be placed around the base of the hydrant to insure drainage. A woven, nylon, polypropylene fabric shall be placed over the gravel to prevent infiltration of soil into the drainage field. The backfill around the hydrant shall be thoroughly compacted to the grade line. Hydrants shall have the interior cleaned of all foreign matter before installation. Stuffing boxes shall be tightened, and the hydrant shall be inspected in working condition. The CONTRACTOR shall remove all of the internals of the hydrant during initial flushing of the water main, in order to prevent rocks, dirt, etc., from damaging the working parts of the hydrants. All hydrants shall be set plumb, and one hose connection shall face the road, or to the satisfaction of the OWNER or ENGINEER. Hydrants shall be painted with 1 primer coat of red paint and 2 red finish coats.

3. The hydrant must employ a compression type main valve which closes with pressure. The operating nut is to be made of bronze or cast iron. The operating threads and thrust collar shall be sealed from the waterway by one or more "O" rings and shall be lubricated from a sealed, self-contained lubricant reservoir. Upper and lower stems shall be jointed with a cast iron coupling with stainless steel pins.

4. There shall be a minimum of 2 drain ports. These drains shall be of bronze. The drain valves shall be rubber or leather faced and shall work automatically with the main valve and permit draining of the barrel with the main valve closed. Springs must be bronze or stainless steel if springs are utilized in drain valve assembly.

5. The hydrant seat must be bronze with a machined seating surface. The main valve assembly shall be seated in a subseat of all bronze material so as to provide bronze to bronze engagement of the valve seat ring and to provide a drainage channel of non-ferrous material. This bushing must be locked in place mechanically to prevent rotation or accidental removal.

6. Where a hydrant is installed adjacent to a road bore or ditch crossing the depth of bury required may be greater than that listed below. In these instances, the CONTRACTOR shall provide the appropriate depth of bury at no additional cost to the OWNER.

7. Fire Hydrants

    i. Fire hydrants shall have a base connection as required for the type and size of pipe used in the water main construction. The hydrant shall be designed for 200 lbs. working pressure and 400 lbs. hydrostatic test pressure. Hydrants shall be of the dry barrel type, with breakable body traffic model, conforming to AWWA C502, and shall have a valve opening at least 5-1/4 inches in diameter. The fire hydrant shall be designed for a minimum of 48 inch bury. The hydrant shall have two 2-1/2 inch hose connections, and one 5-1/4 inch pumper connection.

ii. The main valve opening shall not be less than 5-1/4 inches.

iii. The safety flange shall be set approximately 4 inches above ground level.

iv. The shoe shall be sized 6” mechanical joint base shoe.

v. All fire hydrants shall be Model 423 Super Centurian 250 manufactured in the USA by Mueller, American Flow Control, or approved equal.

8. For water mains larger than 16” diameter, the tee required for an offset hydrant shall be a tangential tee/outlet with the horizontal branch coming from the bottom of the main line.

F. COMBINATION AIR RELEASE VALVE

1. Combination air release valves (ARV) shall be installed at high points in the supply main when directed by the ENGINEER. Combination air release valves shall be located out of harm’s way (not in fields). The CONTRACTOR must maintain slope in line between the water main and the ARV. ARV line shall have a minimum of 42” cover. Valve sizes shall be as indicated on the Drawings. All combination valves shall be so designed as to permit the release of a large quantity of air during the filling of the pipeline and also permit a large quantity of air to reenter the pipeline to break the vacuum and eliminate any danger of collapse should the liquid suddenly leave the pipeline. The combination pressure unit operates independently and releases small accumulations of air which may collect while the line is in operation and working under pressure. Valves shall have cast iron bodies and be furnished with national pipe threads. Floats and trim shall be of a non-corrosive metal, standard with the manufacturer. Seats shall be of a material which will provide cushion for the float sufficient to receive float shock upon closing.

2. All ARVs shall be 200C Series by Val-Matic of approved equal. Connections shall be made to the pipeline by the use of a tangential tee/outlet with the horizontal branch coming from the top of the main line sized per the combination air release valve. Combination air valves shall be installed in a concrete vault. The schedule 80 PVC vent line piping shall be sized to match the combination air release valve or per the manufacturer recommendation. Fittings shall be used for the PVC vent line piping, bending will not be allowed. An aluminum aero foil cap shall be secured over the open end of the PVC vent line piping.

3.00 EXECUTION

A. Installation of utility materials is specified in other sections of these technical specifications.

3.01 SHIPPING AND HANDLING

A. Handle Ductile Iron pipe in a manner to ensure installation in sound, undamaged condition using proper equipment, tools and methods, as follows:

1. Suitable slings or skids.

2. Without hooks in contact with joint surfaces.

3. Provisions for preventing contact with adjacent units during moving or storage.

4. Protection for all pipe ends such as beveled ends, flanges, mechanical joints, plain ends, threads, etc., prior to shipping to job site.

B. Delivery, Storage, and Handling of PVC Pipe

1. PVC Pipe shall be shipped so as to not bend, dent, or otherwise damage the pipe during transport.

2. Contractor shall take all necessary precautions to prevent damage to pipe and fittings during delivery and unloading.

3. Owner shall observe and inspect unloading of pipe to ensure proper unloading procedures are followed.

4. Under no circumstances will pipe be allowed to be rolled, pushed, or dropped off from any height for delivery, storage, or installation. Any pipe found to have been damaged due to improper handling procedures truck will be immediately marked for identification and removed from the jobsite at the Contractor's expense.

5. Stacking of pipe shall be performed in accordance with Pipe Manufacturer's recommendations.

6. Once pipe has been unloaded, it shall be stored as near to its point of installation as possible. Contractor shall limit moving or restacking of pipe prior to installation. Contractor shall keep track of any moving or restacking of pipe materials during installation and make such records available to Owner and Pipe Manufacturer if needed.

7. Where necessary, because of ground conditions, store pipe on wooden sleepers, spaced suitably and of such widths as not to allow deformation of pipe at point of contact with sleeper or between supports.

8. Pipe shall not be stored close to heat sources or hot objects such as heaters, boilers, steam lines, and engine exhaust.

9. If pipe is to be exposed to direct sunlight for extended periods (in excess of two years from the date of manufacture), then Contractor shall cover/shade pipe utilizing canvas or other opaque materials. Black plastic will not be acceptable as a shading material.

10. Gaskets shall be protected from exposure to excessive heat, prolonged direct sunlight, and oil and grease. Contractor shall not store gaskets near electrical motors or transformers or other sources of ozone.

11. Material storage shall be performed in accordance with Pipe Manufacturer's recommendations.

3.02 GENERAL

A. Install pipe, fittings, specials, and appurtenances in accordance with AWWA C605, M23, UNI-B-9 and in accordance with the Pipe Manufacturer's recommendations.

B. Lay pipe to the lines and grades as indicated on the Plans.

C. Tapping of pipe shall be in accordance with AWWA C605, M23, UNI-B-8 and Pipe Manufacturer's recommendations. Direct tapping shall only be permitted for 6-inch through 16-inch (DR 18 and DR 14). Tapping of other sizes or classes of pipe will require the use of a tapping saddle.

3.03 PIPE HANDLING

A. Handle pipe and piping materials with care to avoid damage.

B. Prior to installation, each pipe length shall be carefully inspected for damage.

C. All pipe, fittings, and appurtenances shall be thoroughly cleaned before installation and shall be kept clean until installation and backfilling has completed.

D. Use only nylon ropes, slings, or other lifting devices that will not damage the surface of the pipe.

E. Keep the pipe clean and free of debris, dirt, animals, and trash during and after laying operations.

F. At the close of each operating day, seal the open end of the pipe using a gasketed night cap.

3.04 PIPE INSTALLATION

A. Do not drag pipe over gravel or rock. Avoid striking rocks or hard objects when lowering pipe into the trench.

B. Placement of pipe and fittings into the trench should be done with ropes and skids, slings on a backhoe bucket, or by hand.

C. Pipe or fittings shall not be thrown into the trench and no part of the pipe shall be allowed to take an unrestrained fall onto the trench bottom.

D. Joint sockets shall be carefully cleaned before pipes are lowered into trenches.

E. Pipe trenches and excavation shall be kept free of water during pipe laying operations and other related work. If high groundwater levels are expected or encountered, Contractor is to ensure that a minimum depth of cover of 1.5 times the pipe diameter will be maintained over the pipe once it has been installed or provide other methods approved by the Owner and Pipe Manufacturer of preventing flotation of the pipe.

3.05 JOINT MAKING

A. Inspect the gasket, pipe spigot bevel, gasket groove, and sealing surfaces for damage or deformation. In cases when gaskets are supplied separately from pipe, Contractor is to ensure that gaskets supplied are designed for the pipe in use.

B. Clean the gasket of all extraneous matter.

C. Apply a thin film of joint lubricant to the inside of the gasket and the outside of the spigot prior to entering the spigot into the bell. Lubricated spigots ends shall not come in contact with soil or backfill material.

D. Insert the spigot end of the pipe carefully into the bell until the reference mark on the spigot is flush with the bell. If two reference marks are present, the mark closest to the spigot end shall be considered the minimum insertion mark, and the second mark shall be considered the maximum insertion mark. Under no circumstances will the spigot be inserted into the bell past the reference mark or maximum insertion mark.

E. For small diameter pipe, use the bar and block method for joint assembly or other method approved for use by the Owner and Pipe Manufacturer.

F. For large diameter pipe, use mechanical assistance such as hydraulic pipe pullers, jacks, pulleys, come-alongs, or a backhoe bucket. Observation by a spotter will be required when assembling joints for large diameter pipe to prevent over-insertion.

G. When using a field cut plain end piece of pipe, bevel the end with a beveling tool, wood rasp, or power sander to the same angle and length as provided on the factory-finished pipe. Redraw the insertion line on the spigot using a factory-marked spigot as a guide.

H. Angular changes in pipe alignment shall be achieved by either fittings, joint deflection, or longitudinal bending of the pipe.

I. Joint deflection shall not exceed the Pipe Manufacturer's recommendation.

J. Field assembly of pipe fittings shall follow the Pipe Fittings Manufacturer's recommendations.

K. Mechanical joints shall be assembled per the Pipe and/or Fittings Manufacturer's recommendations as well as the recommendations of the mechanical joint supplier.

3.06 PVC FUSION

A. GENERAL

1. Fusible polyvinylchloride pipe will be handled in a safe and non-destructive manner before, during, and after the fusion process and in accordance with this specification and pipe supplier's guidelines.

2. Fusible polyvinylchloride pipe will be fused by qualified fusion technicians, as documented by the pipe supplier.

3. Each fusion joint shall be recorded and logged by an electronic monitoring device (data logger) connected to the fusion machine.

4. Only appropriately sized and outfitted fusion machines that have been approved by the pipe supplier shall be used for the fusion process. Fusion machines must incorporate the following elements:

   a) HEAT PLATE - Heat plates shall be in good condition with no deep gouges or scratches. Plates shall be clean and free of any debris or contamination. Heater controls shall function properly; cord and plug shall be in good condition. The appropriately sized heat plate shall be capable of maintaining a uniform and consistent heat profile and temperature for the size of pipe being fused, per the pipe supplier's guidelines.

   b) CARRIAGE – Carriage shall travel smoothly with no binding at less than 50 psi. Jaws shall be in good condition with proper inserts for the pipe size being fused. Insert pins shall be installed with no interference to carriage travel.

   c) GENERAL MACHINE - Overview of machine body shall yield no obvious defects, missing parts, or potential safety issues during fusion.

   d) DATA LOGGING DEVICE – An approved datalogging device with the current version of the pipe supplier's recommended and compatible software shall be used. Datalogging device operations and maintenance manual shall be with the unit at all times. If fusing for extended periods of time, an independent 110V power source shall be available to extend battery life.

5. Other equipment specifically required for the fusion process shall include the following:

   a) Pipe rollers shall be used for support of pipe to either side of the machine

   b) A weather protection canopy that allows full machine motion of the heat plate, fusion assembly and carriage shall be provided for fusion in inclement, extreme temperatures, and /or windy weather, per the pipe supplier's recommendations.

   c) An infrared (IR) pyrometer for checking pipe and heat plate temperatures.

   d) Fusion machine operations and maintenance manual shall be kept with the fusion machine at all times.

   e) Facing blades specifically designed for cutting fusible polyvinylchloride pipe shall be used.

B. JOINT RECORDING

1. Each fusion joint shall be recorded and logged by an electronic monitoring device (data logger) connected to the fusion machine. The fusion data logging and joint report shall be generated by software developed specifically for the butt-fusion of fusible polyvinyl chloride pipe. The software shall register and/or record the parameters required by the pipe supplier and these specifications. Data not logged by the data logger shall be logged manually and be included in the Fusion Technician's joint report.

3.07 FUSION TECHNICIAN REQUIREMENTS

A. Fusion Technician shall be fully qualified by the pipe supplier to install fusible polyvinylchloride pipe of the type(s) and size(s) being used. Qualification shall be current as of the actual date of fusion performance on the project.

3.08 HDPE TRANSPORTATION, UNLOADING, HANDLING, AND STORAGE

A. The manufacturer shall package product in a manner designed to deliver the pipe and fittings to the project neatly, intact and without physical damage.

B. During transportation each pipe shall rest on suitable pads, strips skids, or blocks securely wedged or tied in place.

C. During loading, transportation, and unloading, every precaution should be taken to prevent damage to the pipe. The handling of the pipeline shall be in such a manner that the pipe is not damaged by dragging it over sharp and cutting objects. Cuts or gouges that reduce the wall thickness by more than 10% are not acceptable and must be cut out and discarded.

D. Handle the pipe in accordance with the PPI Handbook of Polyethylene Pipe (2nd Edition), Chapter 2. All pipe and accessories shall be loaded and unloaded by lifting with hoists or by skidding in order to avoid shock or damage. Under no circumstances shall materials be dropped. Pipe handled on skidways shall not be rolled or skidded against pipe on the ground. Slings, hooks or pipe tongs shall be padded and used in such a manner as to prevent damage to the exterior surface or interior of the pipe. All pipe and fittings shall be subjected to visual inspection at time of delivery and before they are lowered into the trench to be laid.

E. Materials, if stored, shall be kept safe from damage and shall not be stacked higher than the limits recommended by the manufacturer. The bottom tiers shall be kept off the ground on timbers, rails, or concrete. Pipe shall not be stored close to heat sources. The contractor shall be responsible for all security, damage and loss of pipe, excluding Acts of God.

F. The interior of the pipe as well as all sealing surfaces of mating components (i.e. flange faces) shall be kept free from dirt or foreign matter at all times. The open ends of all sections of joined and/or installed pipe (not in service) shall be plugged to prevent insects, animals, or foreign material from entering the pipe line or pipe section. The practice of stuffing cloth or paper in the open ends of the pipe will not be permitted. Use waterproof nightcaps to prevent the entrance of any type of natural precipitation into the carrier or containment pipe and will be secured to the pipe in such a manner that the wind cannot blow them loose. Where possible, the pipe shall be raised and supported at a suitable distance from the open end such that the open end will be below the level of the pipe at the point of support.

3.09 HDPE FUSION AND JOINING

A. Fusion Joining Requirements:

1. All HDPE pipe shall be joined to itself by the heat fusion process which produces homogeneous, seal, leak tight joints. Tie-ins between sections of HDPE pipe shall be made by butt fusion whenever possible.

2. Butt Fusion: The pipe shall be joined by the butt fusion procedure outlined in ASTM F 2620 or PPI TR-33. All fusion joints shall be made in compliance with the pipe or fitting manufacturer's recommendations. Fusion joints shall be made by qualified fusion technicians per PPI TN-42. A record or certificate of training for the fusion operator must be provided that documents training to the fundamentals of ASTM F 2620. Considerations should be given to adverse weather conditions, such as temperatures below freezing, precipitation, or wind, and provisions shall be accepted by the owner/engineer.

3. Electrofusion: Electrofusion joining shall be done in accordance with the manufacturers recommended procedure. Other sources of electrofusion joining information are ASTM F 1290, PPI TN 34, and PPI Municipal Advisory Board (MAB) Generic Electrofusion Procedure for Field Joining of 12 Inch and Smaller Polyethylene (PE) Pipe. The process of electrofusion requires an electric source, commonly called an electrofusion processor that has wire leads and a method to read electronically (by laser) or otherwise input the barcode of the fitting. The electrofusion processor must be capable of reading and storing the input parameters and the fusion results for later download to a record file. Qualification of the fusion technician shall be demonstrated by evidence electrofusion training within the past year on the equipment to be utilized for this project.

B. Fusion Operators:

1. The employer of the fusion machine operator is responsible for the fusion joint quality of the fusion weld made by that individual. The employer is responsible for documenting all training and qualification records for that individual, including compliance to any code requirements for fusion/bonder operators.

2. All HDPE fusion equipment operators shall be qualified to the procedure used to perform pipe joining. Fusion equipment operators shall have current, formal training on all fusion equipment employed on the project. Training received more than two years prior to operation with no evidence of activity within the past 6 months shall not be considered current.

3. For Projects with at least 5,000 feet or with pipe larger than 24 inches, operators or their supervisor must have a current Fusion Training Certificate for the equipment to be used on the project.
4. When the fusion machine operator is employed by the HDPE pipe and fusion machine supplier, the supplier shall maintain an ISO 9001 Certified Quality Management System.

C. Butt Fusion Equipment

1. For 6” and larger pipe sizes, the pipe butt fusion machine shall be a self-contained hydraulic fusion machine capable of butt fusing HDPE pipe. The carriage must be removable from the chassis for in-ditch use. The machine must be compatible with an electronic data recording device. Accessories will include all butt fusion inserts for the specified range of pipe sizes, a pyrometer kit for checking the surface temperature of the heater, extension cord of appropriate gauge (25' minimum), and hydraulic extension hoses (minimum of four). The butt fusion machine will be McElroy, or approved equivalent.

2. In areas where there may be insufficient space to lay out the entire length of fused pipe to be pulled-back, the Contractor shall utilize a continuous HDPE pipe fusion equipment such as a PolyHorse by McElroy or other means in order to fuse the length of pipe necessary for the installation. The Contractor shall be responsible for securing and obtaining permission/permits from adjacent property if necessary, for staging and/or fusing of the pipe and HDD equipment at no additional cost to the Owner.

D. Fusion Data Recording:

1. For 6” and larger pipe sizes, McElroy DataLogger or equivalent fusion data recorder shall be used to record all fusion welds on hydraulically operated fusion machines. The device shall be capable of meeting the requirements of ASTM F 3124, “Standard Practice for Data Recording the Procedure used to Produce Heat Butt Fusion Joints in Plastic Piping Systems or Fittings”. The device, or combination of devices, shall record the following variables of each fused joint:

    a. Heater surface temperature- immediately before inserting the heater plate, measure with a pyrometer and manually enter into the weld record.
    b. Gauge pressure during the initial heat cycle
    c. Gauge pressure and elapsed time during the heat-soak cycle
    d. Heater removal (dwell) time
    e. Gauge pressure and elapsed time during the fusing/cool cycle
    f. Drag pressure
    g. Pipe diameter and wall thickness
    h. Type of HDPE material(Specification and Classification) and manufacturer
    i. Fusion Machine Identification

2. The device shall record the operator name and a unique operator ID number, along with the date and time of each weld.

3. Records showing the device is up to date on all required calibration should be available for review when requested.

4. All fusion welds should be traceable to the report (via operator and weld ID) with an indentation weld stamp or by permanent paint marker/pen next to fusion weld.

5. A weld location map may be requested, prior to commencement of work, by the owner or owner's representative.

E. Butt Fusion Examination and Testing:

1. Examinations

a. Visual: For pipe sections, examine the full exterior circumference for bead uniformity before cutting. After cutting the pipe section, review the interior bead. All beads should have visually acceptable bead formation as shown in Fig 4 and Appendix X2 of ASTM F 2620. In addition, the following characteristics are expected:
   i. There shall be no evidence of cracks or incomplete fusing
   ii. ii. There shall be no evidence of captured objects (e.g., pipe shavings, facer ribbons) between bonded surfaces.
   iii. Variations in upset bead heights on opposite sides of the cleavage and around the circumference of fused pipe joints are acceptable.
   iv. The apex of the cleavage between the upset beads of the fused joint shall remain above the base material surface
   v. Fused joints shall not display visible angular misalignment, and outside diameter mismatch shall be less than 10% of the nominal wall thickness

b. Fusion Data Record Review

The fusion date record for each fused joint shall be compared to the approved fusion procedure. The reviewer shall verify the following:

   i. Interfacial pressure was within the acceptable range
   ii. Heater surface temperature was within the acceptable range
   iii. Butt fusion pressure applied during the fusing/cool cycle was correctly calculated to include drag pressure, fell within the acceptable range for the applicable size and agrees with the recorded hydraulic fusing pressure.
   iv. Butt fusing pressure was reduced to a value less than or equal to drag pressure at the beginning of the heat soak cycle.
   v. Fusing machine was opened at the end of the heat soak cycle, the heater was removed, and the end were brought together at the fusion pressure with the acceptable time range
   vi. Cooling time at butt fusing pressure met the minimum time specified

c. If the recorded data in section 3.07.D.1 is outside the limits of the acceptable range, the joint is unacceptable, and must be removed and replaced.

d. Frequency. Records for test fusion joints should be reviewed immediately after the joint is completed. Fusion joints for jobsite fusions should be reviewed daily or before being covered with backfill.

2. Mechanical Tests

a. Contractor shall mechanically test the first fusion of each operator and each machine used on the project. Installation shall not continue until a fusion test has passed the test. Additional mechanical test are not required as long as long as the fusion are reviewed with the frequency specified.Testing of fusion joints with no fusion data record review shall be at a frequency specified by the Owner or Engineer.

b. The fusion shall be allowed to cool completely, then fusion test straps shall be cut out.

c. All samples shall be labeled with operator information. Testing must be done at 73 degrees F plus or minus 5 degrees. The test temperature and sample size are critical to testing. Testing performed at cold or elevated temperatures may not give similar results to tests performed at ambient temperatures.

d. Each pipe sample weld shall be subjected to testing at two locations 180 degrees apart from each other in the joint weld. All specimens shall be tested by one of the following methods:

   i. Reverse Bend Test are allowed for pipe sizes 4” IPS or smaller. The specimens shall be removed and tested in accordance with ASTM F 2620, Appendix X4.
   ii. Guided Side Bend Test are allowed for all pipe sizes 4” IPS and larger. The specimens shall be removed and tested in accordance to recommendations and procedures provided by McElroy Manufacturing.
   iii. Hydrostatic Burst Test is allowed for pipe sizes 2”-24”. The specimen length should measure 6 times pipe diameter with the butt fusion joint in the center of the specimen. The specimen should be tested in a tank filled with water, and testing conditions monitored and recorded with computerized equipment. The specimen will be tested at 4 times pipe rated pressure for 5 minutes with no failure of joint allowed.

e. Results of any mechanical test should be documented. Information on the weld and operator should be transferred from the sample to
the testing record.

3.10 HDPE INSTALLATION

A. Direct Burial

1. Buried HDPE pipe and fittings shall be installed per engineering drawings and ASTM D2487, ASTM D2774, ASTM D2321 and AWWA Manual of Water Supply Practices M55 Chapter 8.

2. When moveable trench bracing such as trench boxes, moveable sheeting, shoring or plates are used to support the sides of the trench, care shall be taken in placing and moving the boxes or supporting bracing to prevent movement of the pipe, or disturbance of the pipe bedding and the backfill. Trench boxes, moveable sheeting, shoring or plates shall not be allowed to extend below top of the pipe. As trench boxes, moveable sheeting, shoring or plates are moved, pipe bedding shall be placed to fill any voids created and the backfill shall be re-compacted to provide uniform side support for the pipe.

3. Pipe embedment - Embedment material should be Class I, Class II, or Class III materials as defined by ASTM D-2321 Section 6. The use of Class IV or Class V materials is not recommended, however they may be used only with the evaluation and approval of the engineer at a demonstrated achievable compaction

4. Bedding: Pipe bedding shall be in conformance with ASTM D2321 Section 8. Compaction rates should be as specified in ASTM D2321. Deviations shall be approved by the engineer.

5. Haunching and backfill shall be as specified in ASTM D 2321 Section 9 with Class I, II, or III materials. Compaction shall be in excess of 85% Proctor, providing a minimum modulus of 1000 psi or greater.

B. Pull-In Installation

1. Per ASTM F1804 and/or www.HDPEapp.com, the contractor shall determine and document the maximum proposed pull-in length and pull-in force for the pressure class and pipe diameter to be pulled into an open trench. Pull-in lengths will not exceed the maximum lengths for the class and diameter pipe. A commercially available load limiter (weak link) approved by the Engineer shall be used between the puller and the pipe.

2. Prior to pulling the pipeline, contractor shall place rollers or other approved devices beneath the pipe to avoid unnecessary damage and to reduce pipe drag.

3. Trenchless installations:

   i. For Horizontal Directional Drilling (HDD), refer to ASTM F1962, PPI TR-46, PPI PE Handbook (Chapter 12) and www.PPIBoreAid.com

C. Appurtenances

1. All appurtenances (tees, elbows, services, valves, air relief valves, fire hydrants, etc.), must be independently supported and shall not rely on the pipeline and its connections for this support. Excessive stresses may be encountered when appurtenances are inadequately supported.

2. Hydrant Assemblies shall be installed and field tested according to the requirements of AWWA M17.

3.11 PIPE INSPECTION

A. All pipe shall be subject to approval of the Engineer. Any material not meeting the specifications, or obviously faulty material, shall be rejected by the engineer and removed from the job site by the contractor

B. Pipe sections damaged by handling which, in the opinion of the Engineer, cannot be satisfactorily repaired shall be rejected. This shall include, but is not limited to, broken bells and spigots, bent bell-and-spigot rings, excessive deflection and similar damage.

3.12 CLEANING

A. Thoroughly clean interior of all pipe, fittings and joints before installation.

B. Exclude foreign matter during installation by providing temporary covers over end of pipe, if necessary.

C. Do not place tools, clothing or materials at any time in pipe.

D. Visually inspect, remove all articles in pipe, brush or flush clean immediately prior to final fitting of system.

3.13 PIGGING, FLUSHING, CLEANING, AND DISINFECTING

A. All mains shall be pigged, cleaned and flushed to remove all dirt, sand, debris and other foreign matter. The Contractor shall be responsible for developing a pigging and flushing plan to be submitted to the Engineer for approval prior to pigging and flushing.

B. Disinfection:

1. Cleaning and disinfecting of potable water systems shall be in accordance with AWWA C651 and AWWA M55 Chapter 10.

2. The liquid disinfection chemical solution should be limited to less than 12% active chlorine. The time-duration of the disinfection should not exceed 24 hours. Chlorine tablets or powders are not permitted.

3. Upon completion, the system should be thoroughly flushed with fresh water, and retested to verify the disinfectant chlorine level has been reduced to potable drinking water concentrations in all service water tubing and branch lateral pipes.

3.14 VALVES AND ACCESSORIES

A. All valves and accessories for the piping systems shall be installed in accordance with the manufacturer's recommendations.

END OF SECTION 330500

Intentionally Blank

DIVISION 33 - SITE CONSTRUCTION

SECTION 330523.13 - HIGHWAY CROSSINGS

1.00 GENERAL

A. Furnish all materials, accessories, equipment, tools, transportation, services, labor and perform all operations necessary for the installation of pipelines on or under railway and/or highway property.

B. The contractor shall be responsible for notification of appropriate officials as required by Highway and Railroad permits.

C. The contractor is responsible for any charges by the Railroad/s for flagmen, foremen, engineering observers, and others; and by IDOT and others during the course of the work; and shall include such costs in his bid price

1.01 DESCRIPTION OF WORK

A. Pipelines laid under highways and across highway rights-of-way shall be encased in a larger pipe or conduit (casing pipe).

B. Casing pipes shall be installed by simultaneously dry boring and jacking method, or horizontal directional drilling as called out on plans.

C. Laws and orders of highway authority prescribing a higher degree of protection than specified herein shall supercede the applicable portions.

D. Pipelines and casing pipe shall be suitably insulated from underground conduits carrying electric wires on rights-of-way.

E. Applicable Sections: 312300 Excavating, Filling and Grading and 330500 Utility Materials.

1.02 SUBMITTALS

A. Type of material including product data specifications.

B. Name and address of proposed subcontractor.

C. All exceptions or substitutions to the specifications.

2.00 PRODUCTS

2.01 CARRIER PIPE

A. Carrier line pipe shall be of material, and pressure class, as shown on the plans or as approved by the Engineer.

B. Pipe shall be laid with sufficient slack so that it is not in tension.

C. Length of carrier pipe shall be as shown on the plans.

2.02 CASING PIPE

A. Casing pipe shall be continuous butt-welded steel pipe with a coal tar epoxy protective coating (outside of pipe) capable of withstanding highway and railway loading.

B. In all cases, pipe diameter shall be great enough to allow carrier pipe to be removed subsequently without disturbing the casing pipe or roadbed.

C. Annular spaces at the ends of the casing shall be sealed with Pipeline Seal and Insulation, Inc. (PSI) Models or approved equal and shall be pull-on casing end seals with stainless steel banding straps.

D. Casing spacers shall be installed on 6' intervals around the carrier pipe with double spacers at each end of the casing. One casing spacer must be within two (2) feet of each side of a pipe joint. Spacers shall have a minimum height that clears the pipe bell. Casing spacers shall be Cascade Waterworks model CCS with stainless steel and polyethylene with stainless steel bolts and nuts or approved equal.

E. Steel Pipe:

1. Steel pipe shall have a minimum yield strength of 35,000 psi (ASTM A53 Grade B).

2. Minimum wall thickness for steel casing pipe shall be as follows:

Nominal Thickness Inches	Nominal Diameter Inches
0.6045	42

F. Length of casing shall be as shown on the plans.

3.00 EXECUTION

3.01 GENERAL

A. Casing shall be installed as to prevent the formation of a waterway under the right-of-way, with an even bearing throughout its length and shall slope to one end.

3.02 METHOD OF INSTALLATION

A. Boring or Jacking:

1. Bored or jacked installations shall have a bored hole diameter essentially the same as the outside diameter of the pipe plus the thickness of the protective coating.

2. If voids should develop or if the bored hole diameter is greater than the outside diameter of the pipe (including coating) by more than approximately 1", remedial measures as approved by the Engineer shall be taken. Boring operations shall not be stopped if such stoppage would be detrimental to the highway or railroad.

3. Once the casing pipe has been bored, the receiving pit shall be opened up to establish if proper elevation of the casing has been accomplished. The carrier pipe, casing spacers and end seals shall be installed at the time of boring. Protect ends of carrier pipe from backfill.

B. Directional Boring:

1. Once the casing pipe has been bored, the receiving pit shall be opened up to establish if proper elevation of the casing has been accomplished. The carrier pipe, casing spacers and end seals shall be installed at the time of boring. Protect ends of carrier pipe from backfill.

3.03 EXECUTION OF WORK

A. The execution of work on rights-of-way shall be subject to the inspection and direction of both the Owner and respective rights-of-way Engineers or their designated representatives.

B. The Contractor shall comply with all requirements, including bonding and insurance, of the highway or railway authorities having jurisdiction and shall also comply with any permits, licenses, etc. issued with respect to this project.

END OF SECTION 330523.13

DIVISION 33 - UTILITIES

SECTION 331100 - WATER DISTRIBUTION

1.00 GENERAL

1.01 DESCRIPTION OF WORK

A. The work to be performed under this section consists of furnishing all materials, equipment and supplies, tools and pipe; the performance of all necessary labor for the construction of the water piping included in this Contract, complete with valves, accessories and all necessary components.

B. All work shall be completed in accordance with the project plans and details.

C. Applicable Sections: 312300 Excavating, Filling and Grading; 330500 Utility Materials

1.02 QUALITY ASSURANCE

A. Work shall conform to all local building codes.

B. All codes referred to are those listed by:

1. American Society for Testing Materials (ASTM).
2. American Water Works Association (AWWA).
3. American Standards Association (ASA).
4. Commercial Standards (CS).
5. American Association of State Highway & Transportation Official (AASHTO).
6. Federal Specifications.
7. Standard Specification for Water and Sewer Construction in Illinois.

Codes and standards referred to above shall be the current edition which is being used at the time of bid opening.

C. All materials and equipment used on this work shall be new, of the best quality and shall meet the requirements of these specifications. Materials shall be sampled and tested in accordance with current ASTM Specifications or such others as specified hereinafter. The Contractor will be required to furnish certificates of conformance to ASTM or other applicable specifications. Materials shall be stored in such a manner that their conditions are equivalent to new when installed.

D. Submittals on pipe, valves and other accessories shall include manufacture, pressure class, materials of construction, reference AWWA or ASTM Standards the equipment complies with, and catalog cuts or shop drawings showing layout dimensions.

E. Whenever in these specifications reference is made to the requirements of the ASTM AWWA, ASA, or other standard specifications, it shall be understood that references are made to the latest modifications or revisions of such specifications.

F. All material to be used in this work will be inspected before being placed and all rejected material must be removed immediately and not used in the work under this contract. Any material installed or placed without inspection shall be removed and replaced with new materials if so directed by the Inspector.

G. The Contractor shall be required to furnish such laborers as may be necessary to aid the Inspector in the examination and culling of material.

H. The Contractor shall pay for all tests required by the specifications. Such tests shall be performed by a competent independent laboratory approved by the Engineer on test specimens selected by the Contractor under the direct supervision of the Engineer. Copies of all test results shall be submitted to the Engineer directly from the testing laboratory.

2.00 PRODUCTS See Section 02080-Utility Materials for material specifications.

3.00 EXECUTION

3.01 INSTALLATION OF BURIED PIPING

A. Proper implements, tools and facilities satisfactory to the Inspector, shall be provided and used by the Contractor for the safe and convenient execution of the work. All pipe, fittings and valves shall be carefully lowered in the trench piece by piece by means of a derrick, ropes or other suitable tools or equipment in such a manner as to prevent damage to piping materials and protective coatings and linings. Under no circumstances shall materials be dropped or dumped into the trench.

B. Every precaution shall be taken to prevent foreign material from entering the pipe while it is being placed in the line. If the pipe laying crew cannot install the pipe in place without getting earth into it, the Contractor will be required before lowering the pipe into the trench, to place a heavy, tightly woven bag over each end of the pipe to be left in place until the connection is made to the adjacent pipe. During laying operations, no debris, tools, clothing or other material shall be placed in the pipe. At times when pipe laying is not in progress, the open ends of pipe must be closed by a watertight plug or other suitable means to seal the open end of the pipe.

C. Wherever possible, pipe shall be laid with bell ends facing upstream (in the direction of laying). Wherever it is necessary to deflect the pipe from a straight line either in the vertical or horizontal plane to avoid obstructions, the angle of the deflection allowed shall not exceed that recommended by the manufacturer of the pipe. The use of fittings to make vertical bends shall be subject to the approval of the Engineer.

D. Preparatory to making pipe joints, the joint material on both the bell and spigot ends shall be thoroughly cleaned and coated with the proper lubricant or cement to facilitate assembly. The spigot end shall be inserted in the bell and pressure applied until the pipe is properly sealed.

E. Trenching shall comply with Section 312300 (Excavating, Filling and Grading). Trench should be sufficiently wide to permit tamping around pipe. Bottom should be smooth and cleared of stones or protruding hard objects. Pipe should be supported over its entire length.

F. All piping is to have a minimum of 60" of cover over the pipe, unless otherwise specified. All Water pipes installed on State or County right-of-way (either in the flowline or on the side slopes) shall have a minimum cover of 60”.

G. Backfill operations shall commence immediately after laying pipe in trench upon authorization of the inspector.

H. No pipe shall be laid in water or in trench conditions unsuitable for laying water pipe in conformance with these specifications.

I. The Contractor shall provide adequate equipment to eliminate “skips” during the trenching operation. Skips will not be permitted unless approved by the Engineer or Inspector.

3.02 PIGGING

A. All of the water mains shall be pigged for preliminary cleaning before final flushing, sterilization and pressure testing. Pigging shall be completed with the use of a “hard” pig followed by a “soft” pig. Pigs may not be reused.

B. Pigs shall be constructed of polyurethane foam of five (5) pounds per cubic foot density and two (2) pounds per cubic foot density, each, and coated with a polyurethane rubber coating. (Aqua-Pig by Girard Industries, Poly Pig by Pipeline Pigging Products, or approved equal). Pig shall be slightly greater in diameter than inside diameter of each pipe size to be pigged. Pig size and type shall be as per the pig manufacturer's recommendations.

C. Pigs of appropriate size and type shall be inserted into launching station assembly located at well field. Launching assembly shall be closed and water pressure slowly applied to move the pigs down the line. Continue water pressure behind the pigs to allow movement at a rate to provide thorough cleaning of the pipe interior without pressure surges in the pipe. Continue pigging operation until pigs exit the receiver point. Continue water flushing as per the specifications until clean water without dirt or debris results.

D. Contractor shall provide launching station and receiving located at water plant holding cell. Exit point shall be located where the flushing water and debris may be handled without damage to adjacent property or contamination or damage to the new holding cell.

3.03 DUCTILE IRON PIPE INSTALLATION

A. Installation shall conform to the requirements of AWWA C600 and the following:

1. Mechanical Joints: The outside of the spigot and inside of the bell of mechanical joint pipe shall be thoroughly cleaned to remove all foreign matter from the joint. The cast iron gland shall then be slipped on to the spigot end of the pipe with the lip extension of the gland toward the socket or bell end. The rubber gasket shall be placed on the spigot end with the thick edge toward the gland. The pipe shall be pushed forward to completely seat the spigot end in the bell. The gasket shall then be pressed into place within the bell, being careful to have the gasket evenly located around the entire joint. The ductile iron gland shall then be moved along the pipe into position and bolted. Nuts spaced 180 degrees shall be tightened alternately to AWWA C600 standards in order to produce an equal pressure on all parts of the gland.

2. Where/if water main crosses an existing petroleum pipeline, slip-joint ductile Iron pipe with hydrocarbon resistant gaskets shall be used for a length as required to obtain at least 25 feet of clear distance from the water main to the petroleum pipeline or as shown on plans or required by permit whichever greater.

3. Flanged Pipe: Install piping with flanged carefully faced and properly bolted, without piping being subject to unnecessary or excessive strains.

4. Assemble pipelines from full lengths of pipe, using short sections only where required.

5. Provide flanges or unions as applicable at all equipment connections and as otherwise required.

6. An anti-seize compound designed for 1000 degrees F shall be the lubricant for all flange bolt and stud threads, with the compound applied to male threads only.

3.04 VALVES AND ACCESSORIES

A. All valves and accessories for the piping systems shall be installed in accordance with the manufacturer's recommendations.

3.05 LINES AND GRADES

A. The general alignment of the finished water main is shown on the drawings. Minimum covers shall be 60" to top of pipe. Where the new main conflicts with another pipeline or structure, the new main shall pass beneath such pipeline or structure.

3.06 SEPARATION OF WATER MAINS, SANITARY SEWERS AND COMBINED SEWERS

Water mains and water service lines shall be protected from sanitary sewers, storm sewers, combined sewers, house sewer service connections and drains as follows:

A. Water Mains:

1. Horizontal Separation:

i. Water mains shall be laid at least ten feet horizontally from any existing or proposed drain, storm sewer, sanitary sewer, combined sewer or sewer service connection.

ii. Water mains may be laid closer than ten feet to a sewer line when:

a) local conditions prevent a lateral separation of ten feet;

b) the water main invert is at least 18 inches above the crown of the sewer; and

c) the watermain is either in a separate trench or in the same trench on an undisturbed earth shelf located to one side of the sewer.

iii. Both the water main and drain or sewer shall be constructed of slip-on or mechanical joint cast or ductile iron pipe, asbestos-cement pressure pipe, prestressed concrete pipe, or PVC pipe meeting the requirements of Section 653.111 when it is impossible to meet (A) or (B) above. The drain or sewer shall be pressure tested to the maximum expected surcharge head before backfilling.

2. Vertical Separation:

i. A water main shall be laid so that its invert is 18 inches above the crown of the drain or sewer whenever water mains cross storm sewers, sanitary sewers or sewer service connections. The vertical separation shall be maintained for that portion of the water main located within ten feet horizontally of any sewer or drain crossed. A length of water main pipe shall be centered over the sewer to be crossed with joints equidistant from the sewer or drain.

ii. Both the water main and sewer shall be constructed of slip-on or mechanical joint cast or ductile iron pipe, asbestos-cement pressure pipe, prestressed concrete pipe, or PVC pipe meeting requirements of Section 653.111 when:

a) it is impossible to obtain the proper vertical separation as described in (A) above; or

b) the water main passes under a sewer or drain.

iii. A vertical separation of 18 inches between the invert of the sewer or drain and the crown of the water main shall be maintained where a water main crosses under a sewer. Support the sewer or drain lines to prevent settling and breaking the water main.

iv. Construction shall extend on each side of the crossing until the normal distance from the water main to the sewer or drain line is at least ten feet.

B. Exception:

1. Any variance from the specified separation distances in paragraphs A and B must be submitted to IEPA for approval.

C. Force Mains:

1. There shall be at least a ten-foot horizontal separation between water mains and sanitary sewer force mains and they shall be in separate trenches.

2. In areas where these separations cannot be obtained, either the waterline or the sewer line shall be cased in a continuous casing.

D. Sewer Manholes:

1. No waterline shall be located closer than ten feet to any part of a sanitary or combined sewer manhole.

E. Disposal Facilities:

1. No waterline shall be located closer than 25 feet to any on-site wastewater disposal facility, agricultural waste disposal facility, or landfill.

3.07 PRESSURE AND LEAKAGE TESTS

A. After the pipe has been installed and backfilled as specified, all newly laid pipe shall be subjected to the hydrostatic pressure of 1.5 times the working pressure at the lowest elevation or the rated pressure of the pipe, whichever is less. The duration of each pressure test shall be at least one (1) hour. Each valve section shall be tested independently. The Contractor shall furnish the gauge and measuring device for the leakage test, as well as the pump, pipe, connections and all other necessary apparatus, and shall furnish all necessary labor to conduct the test.

B. All tests shall be made in the presence of the Inspector or his authorized representative. The contractor shall notify the Inspector at least twenty-four (24) hours before any work is to be tested.

C. All connections to piping systems shall be completed prior to testing unless otherwise authorized by the Engineer.

D. All pipe shall be slowly filled with water to the specified test pressure, based on the elevation of the lowest point of the line or section under test and corrected to the elevation of the test gauge, shall be applied by means of a pump connected to the pipe in a manner satisfactory to the Engineer. The pump, pipe connections and all necessary apparatus, including gauges, shall be furnished by the Contractor. The Contractor will furnish the gauges for the test and will make all taps into the pipe for conducting the tests.

E. Before applying the specified test pressure, all air shall be expelled from the pipe. If blowoffs are not available at necessary locations, the Contractor shall make the taps at the necessary locations before the test is made and insert the plugs after the test has been completed.

F. The duration of each leakage test shall be one hour, and during the test, the piping shall be subjected to a hydrostatic pressure of 1.5 times the working pressure at the lowest elevation, or the rated pressure of the pipe, whichever is greater. No pipe installation will be accepted until the leakage is less than ten (10) gallons per mile of pipe per inch diameter per 24 hours. Should any tests of pipe laid disclose leakage greater than that specified, the Contractor shall, at his own expense, locate and repair the defective joints until the leakage is within the specified allowance.

G. The pressure and leakage tests are only an indication to the Owner that the distribution system, including service lines, may be fit for use at the time the tests were performed. In no way does the pressure or leakage test relieve the Contractor of his responsibility under the terms of the contract agreement.

H. The Contractor shall be responsible for all arrangements and costs for all water and power used during filling, flushing, and testing of the complete project until final acceptance by Owner.

3.08 DISINFECTION OF PIPING SYSTEMS

A. General: After all piping has been installed and satisfactorily tested for strength and water tightness, the interior of all pipe, fittings and other accessories shall be flushed and disinfected with chlorine. This work shall be done by the Contractor under the supervision of the Inspector. All materials, equipment and arrangements shall be furnished by the Contractor. Laboratory tests will be made by the Contractor.

B. Flushing: Flushing shall be done by turning the system's pressure into one end of the newly laid pipe and discharging it to waste at the other end through flush valves or hydrant heads. Flushing shall continue until

the effluent appears clear to the eye when viewed through a drinking glass. Contractor shall provide temporary flushing devices on lines not equipped with suitable flushing device.

C. Chlorination:

1. Disinfection of the piping systems shall be in accordance with AWWA C651 and may be of the continuous-feed or slug method.

2. In the process of chlorinating newly laid pipe, all valves, hydrants and other appurtenances shall be operated while the pipeline is filled with chlorine solution.

3. Following chlorination, all the water in the main shall be flushed from the pipeline until the replacement water throughout its entire length shall, upon test, be proven comparable to the quality of water served the public from the existing water supply system and approved by the authorities having jurisdiction.

4. Should the initial treatment fail to result in conditions specified above, the chlorination procedure shall be repeated until such results are obtained.

5. After all sterilization has been completed satisfactorily, the Contractor shall dismantle the equipment, plug temporary taps and outlets, and restore all areas to their final required condition.

3.09 HIGHWAYS

A. All pipe crossing of highways shall conform to the requirements of governing authorities: Where the pipe line crosses highways, the Contractor shall be required to obtain necessary permits and clearances from and to meet the requirements for the proper installation of the pipe within the jurisdiction of the interested governing authorities.

B. Furnish all materials, accessories, equipment, tools, transportation, services, labor and perform all operations necessary for the installation of pipelines on or under highway property.

C. Pipelines laid under highways and across highway rights-of-way shall be encased in a larger pipe or conduit (casing pipe).

D. Casing pipes shall be installed by simultaneously dry boring and jacking.

E. Laws and orders of highway authority prescribing a higher degree of protection than specified herein shall supercede the applicable portions.

F. Pipelines and casing pipe shall be suitably insulated from underground conduits carrying electric wires on rights-of-way.

G. Carrier line pipe and joints shall be restrained joint ductile iron pipe – as specified in Section 330500 (Utility Materials).

H. Pipe shall be laid with sufficient slack so that it is not in tension, lengths of carrier pipe shall be as shown on the plans.

I. Casing pipe shall be as specified in Section 330500 (Utility Materials).

J. Casing shall be installed as to prevent the formation of a waterway under the right-of-way, with an even bearing throughout its length and shall slope to one end.

K. Boring, Jacking:

1. Bored or jacked installations shall have a bored hole diameter essentially the same as the outside diameter of the pipe plus the thickness of the protective coating.

2. If voids should develop or if the bored hole diameter is greater than the outside diameter of the pipe (including coating) by more than approximately 1", remedial measures as approved by the Engineer shall be taken. Boring operations shall not be stopped if such stoppage would be detrimental to the highway.

L. Once the casing pipe has been bored, the receiving end shall be opened up to establish if proper elevation of the casing has been accomplished. The carrier pipe, casing spacers and end seals shall be installed at the time of boring. Protect ends of carrier pipe from backfill.

M. The execution of work on rights-of-way shall be subject to the inspection and direction of both the Owner and respective rights-of-way Engineers or their designated representatives.

N. The Contractor shall comply with all requirements, including bonding and protective liability insurance, of the highway authorities having jurisdiction and shall also comply with any permits, licenses, etc. issued with respect to this project.

END OF SECTION 331100

Intentionally Blank

DIVISION 33 – UTILITIES

SECTION 331233 – ELECTROMAGNETIC FLOW METER

1.00 GENERAL

1.01 RELATED DOCUMENTS

A. Drawings and general provisions of the contract, including General and Special Conditions and Division 1 specification section, apply to this section.

1.02 SUMMARY

A. The Contractor shall furnish, install and place in satisfactory operating condition the flow monitoring equipment and appurtenances as shown on the drawings and described in the specifications.

B. This section covers the flow monitoring equipment including:

1. Raw water meter at wells

C. Related sections include the following:

1. 330500 Utility Materials
2. 260000 General Electrical Requirements

1.03 PERFORMANCE REQUIREMENTS

A. Design Summary: Flow meters shall be placed to measure the following:

1. Meter Installation

   a. Raw Water Meter – 10” Diameter

2. Meter shall be Ultra Mag Model UM08 or equal.

1.04 SUBMITTALS

A. Product Data: Include the following for each different piece of equipment called for in this section:

1. Product literature
2. Manuals
3. Complete product description
4. Affidavits of compliance with referenced standards and codes.
5. Manufacturer's warranty
6. A list of all deviations from drawings and specifications.

B. Shop Drawings: All shop drawing submittals shall be in accordance with the General Conditions and Division 1 and include the following:

1. Dimensions and required clearances
2. Layout for all equipment including installation details

C. Operation and Maintenance Data: Two (2) copies of each manufacturer's Maintenance and Operating Instructions Manual shall be provided with the equipment at the time of delivery. Three (3) copies that include all revisions made during start-up shall be provided after final acceptance.

1.05 QUALITY ASSURANCE

A. In order to assure uniform quality, ease of maintenance and minimal parts storage, it is the intent of these specifications that the flow meters called for under this section shall be supplied by a single manufacturer. All equipment manufacturers shall, in addition to the Contractor, assume the responsibility for proper installation and functioning of the equipment supplied by them.

B. The Contract Documents represent the minimum acceptable standards for equipment specified in this section on this project. All equipment shall conform fully in every respect to the requirements of the respective parts and sections of the drawings and specifications. If not named, the equipment which is a "standard product" with the manufacturer shall be modified, redesigned from the standard mode and shall be furnished with special features, accessories, materials of construction or finishes as may be necessary to conform to the quality mandated by the technical and performance requirements of the specification.

C. Factory Tests: Manufacturer shall factory assemble equipment to detect any defects and demonstrate that they will function satisfactory under all conditions specified. Manufacturer shall prepare and submit a written report on the results of remedial action taken, if any.

D. Reference Standards: Comply with all applicable provisions and recommendations of the following, except as otherwise shown or specified.

1. National Electrical Code (NEC).
2. National Electrical Manufacturers Association (NEMA)
3. Occupational Safety and Health Act (OSHA)
4. American Society of Testing and Materials (ASTM)
5. American Welding Society (AWS)
6. American Institute of Steel Construction (AISC)
7. American Society of Civil Engineers (ASCE)
8. Steel Structures Painting Council (SSPC)
9. American National Standards Institute (ANSI)
10. American Water Works association (AWWA)

1.06 DELIVERY, STORAGE, AND HANDLING

A. Preparation for Transport: Prepare all equipment according to the following:

1. Ensure that all the equipment is dry and protected.
2. Package all the equipment to protect from damage while in transport, loading, and unloading.

B. Storage:

1. Carefully prepare for storage and label all equipment and materials after they have been inspected.
2. Store materials to permit easy access for inspection and identification. Support all material off of the ground and protect steel members and package material from corrosion and deterioration as per manufacturer's instructions.

C. Handling: Handle all equipment as per manufacturer's instructions.

D. Inspect all equipment and materials against reviewed shop drawings at the time of delivery.

E. Equipment and materials damaged or not meeting the requirements of the reviewed shop drawings shall be immediately returned for replacement or repair.

2.00 PRODUCTS

2.01 MANUFACTURERS

A. The manufacturer must meet all the requirements as specified herein and as indicated on the drawings.

B. Manufacturer's Qualifications: All manufacturers shall assume complete responsibility for the design and performance of the equipment supplied by them.
The manufacturer(s) of the equipment specified in this section shall meet one (1) of the following requirements:

1. Have a minimum of five (5) years experience in producing equipment specified in this section and shall produce evidence of at least five (5) installations of similar size in satisfactory operation in the United States.

2. Submit a bond or cash deposit, which will guarantee replacement of the equipment specified in this section in the event of failure. The guarantee bond or cash deposit is required for five (5) years from the date of Owner acceptance of the equipment. Equipment, which does not meet the experience clause and is proposed under these conditions, must meet all technical requirements.

2.02 METER INSTALLATION

A. Meter shall be a velocity sensing electromagnetic type with microprocessor based signal converter, sealed housing, flanged tube meter for 300-psi working pressure and CSA approved. The meters shall be McCrometer flanged model UM 08 or preapproved alternate. The meters shall be ten inch (10”) as shown on the plans. They shall have a range of 52 to 7670 gpm. The indicator shall be equipped with six-digit digital totalizer reading in units of 1000 gallons and shall be accurate within 0.5% of true flow. The meter assembly shall operate within a range of 0.2 FPS to 49 FPS and be constructed as follows:

B. Meter Tube (Sensor) shall be fabricated stainless steel pipe and use 300-lb. AWWA Class “D: flat face steel flanges. The internal and external of the meter tube shall be blasted to near white metal and lined with 40 mils of NSF approved fusion bonded epoxy coating, applied by the fluidized bed method. Meter tubes shall have a constant nominal inside diameter offering no obstruction to the flow. Electrodes shall be 316 stainless steel.

C. Mag Shield shall be welded to the tube providing a completely sealed environment for all coils, electrode connections and wiring harness capable of submerged or buried operation (NEMA 6P). Connection cable shall also be rated for submerged conditions.

D. Signal Converter (Indicator/transmitter) shall be pulsed dc coil excitation type with auto zeroing. The signal converter shall be remotely mounted away from the meter. The converter shall indicate direction of flow and provide a flow rate indication and a totalization of flow volume for both forward and reverse directions. Both forward and reverse totalizers shall be electronically resettable. The converter shall provide an isolated 4-20 mA output in 800-ohm load, and a frequency output of a maximum of 0-800 Hz and a scaled pulse output. The microprocessor based signal converter shall have a self-diagnostic test mode and a backlit display that continuously displays “Rate of Flow” and “Total Volume”. The signal converter configuration parameters shall be lockout protected, but can be changed via the front panel keypad or with the use of a personal computer or electronic organizer with a 9-pin RS232 serial interface port. The converter shall be compatible with Microsoft Windows and other software programs with built in terminal communication capabilities. The converter shall be remotely mounted up to 300-ft. from sensor, and shall be supplied in a sealed NEMA 4X case, with all calibration complete for desired requirements. Converter shall be supplied with a programmable low flow drop out and empty pipe zero return.

E. Grounding Rings shall be 316 stainless steel and two shall be supplied with each meter tube.

F. Volumetric Testing of all meters must be performed and approved prior to shipment. The complete meter assembly and signal converter must be wet accuracy tested and calibrated as a unit near minimum, intermediate, and maximum manufacturer's specified flow ranges of the meter. The amount of water used to conduct the test must be shown on a shipping tag attached to the meter. The test facility must be certified annually to accuracy of +0.2% and be traceable to the National Institute of Standards and Technology. If desired, the test shall be witnessed by the Owner or their selected agent. A copy of the certified accuracy test record must be furnished at no charge to the Owner, if requested.

G. Warranty Meters shall be warranted for a period of 2 years from the date of manufacturer.

3.00 EXECUTION

3.01 INSTALLATION

A. Install all equipment specified in this section as indicated on the contract drawings and in accordance with the manufacturer's instructions. The Contractor shall field verify all dimensions and provide piping and fittings to properly fit the meter into the piping. All piping and meters shall fit together in true alignment.

B. The Contractor shall furnish and install all field wiring, including indicator wires, required including proper sized wire, conduit, fittings, and supports, as called for on the plans and specified in Division 16.

C. Provide the Owner with an installation certificate signed by the equipment manufacturer's representative attesting that the equipment has been properly installed and is ready for start-up and continuous operation.

3.02 FIELD QUALITY CONTROL

A. Each manufacturer of the electronic equipment called for in this section shall provide a qualified field serviceman for a minimum period of one (1) day with one (1) trip to perform the following services:

1. Equipment installation:

(a) Inspect the completed installation and note deficiencies, if any.

(b) Assist Owner and Contractor during start-up, and adjusting of completed installation.

2. Training:

(a) Instruct personnel in the operating and maintenance of the equipment, provided under this item.

(b) All procedures shall be covered including preventative maintenance, method of controlling equipment, and troubleshooting.

3.03 WARRANTY

A. Warranty all parts to be free from defects in material and workmanship for a period of two years after start-up of the equipment specified in this section. Furnish and install replacement parts found to be defective within the defined two year warranty period.

END OF SECTION 331233

DIVISION 33: OPTICAL FIBER COMMUNICATIONS TRANSMISSION AND DISTRIBUTION CABLING

SECTION 338223 - CABLING

1.00 GENERAL

1.01 SCOPE

A. Furnish and install all miscellaneous optical fiber work required for this project.

B. Section 27 13 23 - Communications Optical Fiber Splicing and Terminations.

1.02 SUBMITTALS

A. Shop drawings shall be submitted on all manufactured and fabricated items outlined. Shop drawings shall be submitted per the specification requirements as stated in Division 1.

B. Submit shop drawings showing location, sizes of metal, method of assembly, hardware, fasteners, anchorage, connection with other work and provisions for accommodating work of other trades.

C. Submit manufacturer's data indicating compliance with the particular requirements of these specifications and with the contract drawings.

D. Submit samples required by these specifications.

1.03 DELIVERY STORAGE AND HANDLING

A. Deliver, store and handle materials and products in accordance with the manufacturer's instructions and recommendations and industry standards.

B. Store all materials in the manufacturer’s original packaging until ready for installation. Protect all products from damage or exposure to adverse environmental conditions, including weather, humidity, and dust.

1.04 PROJECT CONDITIONS

A. Maintain environmental conditions (temperature, humidity, and ventilation) within limits recommended by manufacturer for optimum results. Do not install products under environmental conditions outside manufacturer's recommended limits.

1.05 WARRANTY

A. Manufacturer’s Warranty: Manufacturer agrees to replace or refund the purchase price of products that fail from defects in material and workmanship within the specified warranty period.

1. Warranty Period: One (1) year from date of Substantial Completion.

B. Manufacturer’s Extended Warranty: Manufacturer agrees to replace or refund the purchase price of products that are installed by a manufacturer-certified installer that fail from defects in material and workmanship within the specified warranty period.

1. Warranty Period: Twenty-five (25) years from date of Substantial Completion.

2.00 PRODUCTS

2.01 MANUFACTURERS

A. Manufacturer: Corning, Optical Cable Corporation (OCC), or Equal

2.02 PERFORMANCE REQUIREMENTS

A. Cabling System Requirements:

1. General Requirements: Provide cabling system able to support interconnections to active telecommunications equipment for voice and data applications in a multi-vendor, multi product environment.

2. Structured cabling system should adhere to the following:

a. General: Provide cabling system in compliance with ANSI/TIA-568-D.

b. Pathways: Provide cabling system for pathways and spaces in compliance with ANSI/TIA-569-C.

c. Labelling: Provide cabling system labelled in compliance with ANSI/TIA-606-B.

d. Grounding and Bonding: Provide cabling system grounded and bonded in accordance with ANSI/TIA-607-C.

e. Color Coding: Provide cabling system color coded in compliance with ANSI/TIA-598-C.

f. Data Centers: Provide cabling system in compliance with ANSI/TIA-942-B.

2.03 OUTDOOR LOOSE TUBE OPTICAL FIBER CABLES

A. General Requirements: Provide fiber optic cables that meet the following requirements when tested in accordance with the testing requirements in this section.

1. Attenuation: Fiber optic cables shall not exceed the following change in attenuation:

a. Single mode: 0.15 dB at 1550 nm.

2. Ribbon shall not crack, split, or tear, or show separation of individual fibers.

3. No mechanical damage to fibers.

B. Testing Requirements:

1. Temperature Cycling for Tight Buffered and Hybrid Fiber Optic Cables: FOTP-3.

a. Storage: -40 °C to 70 °C (-40 °F to 158 °F).

b. Installation: -30 °C to 60 °C (-22 °F to 140 °F).

c. Operation: -40 °C to 70 °C (-40 °F to 158 °F).

2. Crush Resistance: FOTP-41.

a. Force: 220 N/cm (125 lbf/in).

3. Cyclic Flexing: FOTP-104.

4. Bending: FOTP-37.

5. Impact Resistance: FOTP-25.

a. Impact Energy: 4.4 N·m (38.94 in·lbf).

6. Twisting: FOTP-85.

6. Tensile and Fiber Strain: FOTP-33; Rated load.

   a. Rated Load: 2670 N (601 lbf).

7. Water Penetration: Pass, when tested in accordance with FOTP-82.

8. Compound Flow: Pass, when tested in accordance with FOTP-81.

9. Lightning Damage: No loss of continuity when tested in accordance with FOTP-181

C. Outdoor Single-Armored Loose Tube Gel-Free Single-Jacket Fibers Cables.

1. Basis of Design Product: Altos Lite Loose Tube, Gel-Free, Single-Jacket, Single-Armored, by Corning Optical or equal.

2. Core Protection: Flexible, spirally wrapped, corrugated steel armor.

3. Physical Performance: Provide cable with fiber in buffer tubes around a dielectric central element surrounded by water-swellable tape, with a single flame-retardant, and UV-resistant jacket in compliance with NEC 770.

   a. Fiber Count: 24 fibers in up to 6 tubes.

3.00 EXECUTION

3.01 EXAMINATION

A. Verification of Conditions: Do not begin installation until substrates have been properly prepared.

B. Evaluation and Assessment: If substrate preparation is the responsibility of another installer, notify Architect of unsatisfactory preparation before proceeding.

3.02 PREPARATION

A. Surface Preparation: Prepare surfaces using the methods recommended by the manufacturer for achieving the best result for the substrate under the project conditions.

3.03 INSTALLATION

A. Install all products in this section following the product manufacturer’s published installation and application manuals and guidelines.

3.04 FIELD QUALITY CONTROL

A. Testing Agency: Owner may engage a qualified testing agency to perform tests and inspections.

1. Inspections: Fiber optic cables, accessories, and installation are subject to inspection for compliance with requirements and photograph documentation of conditions to be concealed by subsequent Work.

B. Tests: As determined by Owner's testing agency from among the following tests:

1. Optical Fiber Cabling Components: Test in accordance with ANSI/TIA 568.3-D.

2. Optical Power Loss: Test in accordance with ANSI/TIA-526-14-C.

C. Fiber optic cable will be considered defective if it does not pass tests and inspections.

3.05 PROTECTION

A. Protect installed products until substantial completion, replace damaged materials and retest.

END OF SECTION 338223

DIVISION 40: PROCESS INTEGRATION

SECTION 400557.23 – ELECTRIC VALVE ACTUATORS

1.00 GENERAL

1.01 MANUFACTURERS

A. Harold Beck & Sons, Inc.
B. Hayward Flow Control
C. Asahi / Amcorp, Inc.
D. Or Equal

2.00 PRODUCTS

2.01 ELECTRIC ACTUATORS

A. All actuators shall be quarter-turn type or multi-turn type with or without an external gearbox, suitable for modulating service or on/off service as specified in the valve schedule.

B. Refer to the valve schedule for service conditions.

C. Actuators shall contain motor, gearing, manual over-ride, limit switches, drive coupling, integral motor controls, position feedback transmitter, and position indicator. No special setting tools shall be required for actuator setup and configuration.

D. Motor
1. Designed for modulating actuator service.
2. Induction type.
3. Insulation: Class H.
4. Totally enclosed, non-ventilated.
5. 120 volt, 1 phase, 60 Hz.
6. Motor shall be non-coasting, suitable for high duty cycle conditions, and shall be self-locking and self-releasing without the use of a separate brake winding, mechanical brake, or worm gear mechanism.
7. The motor shall be capable of up to 60 starts/stops per minute or a temporary stall condition without overheating.
8. Triacs shall be utilized for solid-state switching. Torque capacity of the operators shall be sufficient to operate the valves with a maximum pressure differential indicated in the Valve Schedule with a safety factor of at least 1.5.
9. Maximum current draw of motors shall be 3.1 amperes in a fully stalled condition.
10. Motors shall reach synchronous speed on start-up in 1.5 AC power cycles, and shall also reach dead stop from full synchronous speed in 1.5 cycles. Motor shall not overheat or fail when in continuous stall condition for 72 hours.
11. No electrical or thermal overload protection shall be required for protection of a stalled or cycling operator.

E. Control drive shall be-designed to stay in place upon loss of power and shall be capable of holding a load equal lo at least 200% of the model's rated output. Stall torque shall be self- limiting not exceeding 2.5 times the rated torque. Torque switches shall not be required. Drive shall operate on an increasing signal for full 100° rotation. Control drives shall be able to operate in any mounting orientation.

F. Gear train shall have high efficiency spur gears constructed of heat treated alloy steel or ductile Iron only. Readily available gear modules shall provide for a range of torque and liming combinations within the drive's rated capacity, and shall be field interchangeable. Gears shall be rated at twice the output torque of the operator, so that a continuous stall condition of 72 hours will not create any significant wear or performance degradation. Over-travel of operator shall prevented by internal mechanical stops cast into the actuator. Operating time between full limits of travel shall be between 22-180 seconds for quarter turn models.

G. Motor pinion and all gearing shall be lubricated with a premium, heavy-duty lithium based lubricant, and shall not require changing of the lubrication for a minimum of five years. No oil baths shall be used for lubrication purposes. Maintenance-free bearings shall be used.

H. Manual Operation
1. Manual over-ride shall be by handwheel.
2. Manual operation shall be via power gearing.
3. Return from manual to electric mode of operation shall be automatic upon motor operation.
4. A mechanical indicator of valve position shall be provided and attached to the main output shaft driving the load.
5. No declutching mechanism shall be required for manual operation.
6. Manual operation shall be possible with electric components removed.

I. Actuators using bracket/linkage connection shall consist of linkage between operator and valve shall be by crank arms and connecting rod, with adjustable starting point of valve position and adjustable rod length. Direct coupled actuators shall use a compression fit coupling to connect the Beck output shaft to the valve shaft. Operators shall stop precisely Within 0.15 degrees of the desired control position. Operator output shaft shall be stainless steel. Stem shall be self- locking when the motor is de-energized. Modular construction and special lubrication shall permit the operator to be mounted in any position. Modulating operators shall be capable of operating in ambient temperatures ranging from -40°F to 185°F.

J. Limit Switches
1. Two SPDT limit switches for over-travel protection and four auxiliary SPDT limit switches (two normally open, two normally closed) shall be provided on all operators.
2. Limit switches shall be snap-acting, SPDT, silver alloy contacts rated for 6 amperes at 120 VAC. Switches shall have lubrication-free. nylon rollers, polished stainless steel roller-axle, and tempered blades. Switches shall be Infinitely adjustable over the full range of valve travel. Limit switches shall be wired to a terminal board for remote output
3. Drive shall also have integral mechanical stops, capable of limiting travel of the drive and load, with or without the drive motor.
4. Switch adjustment shall not be altered by manual operation. The use of batteries shall not be required to accomplish this function.

K. The operators for the modulating valves shall be provided with 4-20 mA output signals for valve position feedback. Continuous position sensing of valve position shall be provided. Position sensing shall require no contacting or wiping surface. The position sensing unit shall be provided integral with the operator and shall provide a linear 4-20 mA output signal, approximately. proportional to valve percent open.

L. Modulating actuators shall have a position feedback device mounted directly to the valve actuator gearing inside the gearing compartment. The feedback device shall provide a 4-20 mA signal corresponding to valve position. Modulating valve actuators shall be designed to respond to either a 4-20 mA DC analog signal or a pulsed AC signal as specified herein.

M. Modulating valve actuators designed to respond to 'pulse' open/close signals shall operate the valve during the time the open or close pulse signal is being received. Modulating actuators designed to respond to "pulse" open/close signals shall have the latching circuitry described for open/close actuators disabled.

N. Actuators shall contain wiring and terminals for the following control functions. All dry contacts shall be rated for 6A at 120VAC

1. A five-position, drive-mounted electric handswitch shall be provided to permit local electrical operation of the unit for control adjustment or operation on loss of control signal

2. Four (4) unpowered contacts shall be provided, three of which shall be selected to indicate valve "Opened" position, valve "Closed' position, and 'Auto" status of the actuator.

3. Where required in the Valve Schedule the actuator must be wired to interface with the remote manual control station as supplied by the Electrical Contractor.

O. Certified electrical control schematic diagrams shall be provided by the actuator Manufacturer for each service type of electric actuator. Interconnecting wiring information shall be submitted including terminal numbers, color coding, and the name and terminal numbers. for items to which the wiring is to be connected.

P. Enclosure shall be totally enclosed, cast, weatherproof, dust-tight, NEMA 4X, construction and IP68 rated. Separate conduit entrances shall be available for power and control wiring connections.

Q. Local Controls

1. A five-position, drive-mounted electric handswitch shall be provided to permit local electrical operation of the unit for control adjustment or operation on loss of control signal. All switches, wiring, relays, etc. shall be brought to a terminal board for field connection.
   a) When the handswitch is in the "Auto" position, the actuator shall be controlled by remote control signals. Operators for modulating service shall be provided with integral position controllers which shall receive a 4-20 mA signal and, while in "Auto" mode, shall position the valve to match the setpoint.
   b) When the handswitch is in the "CW' or "CCW" position, the actuator shall move toward the appropriate end-of-travel limit switch. Placing the selector switch in the "Stop" position shall stop the actuator travel.

3.00 <u>EXECUTION</u>

A. DELIVERY, STORAGE AND HANDLING

1. Packing and Shipping:

   a) Valves specified herein shall be factory assembled. Any valve appurtenances, accessories, parts and assemblies that are shipped unassembled shall be packaged and tagged in a manner that will protect the equipment from damage and facilitate the final assembly in the field.

   b) Care shall be taken in loading, transporting and unloading to protect valves, appurtenances, or coatings from damage. Equipment shall not be dropped. All valves and appurtenances shall be examined before installation and no piece

shall be installed which is found to be defective. Any damage(s) shall be repaired.

c) Prior to shipping, the valves and all associated accessories shall be acceptably packaged and covered to prevent entry of foreign materials.

d) All valves shall be shipped, remain covered and stored on site until they are installed and put into use.

B. **FIELD TESTING**

1. A direct factory representative shall be made available by the equipment supplier for star-up service, inspection and necessary adjustments.

C. **WARRANTY**

1. The Valve manufacturer shall warrant the valve to be free of defects in material and workmanship for a period of three years from date of shipment provided the valve is installed and used in accordance with all applicable instructions. Electrical components shall have a one-year warranty.

END OF SECTION 400557.23

DIVISION 40: PROCESS INTEGRATION

SECTION 404616 – POLYETHYLENE ENCASEMENT TUBING

1.00 GENERAL

A. This section covers the materials methods of construction, and requirements necessary to complete the polyethylene encasement pipe wrap installation as indicated on the drawings or as specified herein.

1.01 SUBMITTALS

A. Shop drawings shall be submitted on all items outlined. Shop drawings shall be submitted per the specifications requirements as stated in Division 1.

B. Submit manufacture's data indicating compliance with requirements of these specifications and with the contract drawings.

2.00 PRODUCTS

2.01 POLYETHYLENE ENCASEMENT TUBING

A. The polywrap shall conform to ANSI/AWWA C105 / A21.5.

B. The polywrap used under this contract shall be an enhanced brand infused with a corrosion inhibitor and an anti-microbial additive to control external corrosion, helping to ensure long service life.

C. Polyethylene Film: 8-Mil minimum thickness.

1. The material shall be V-Bio enhanced polyethylene encasement as manufactured by Trumbull Manufacturing Inc., Item No. 388-7841 or approved equal.

D. Polywrap tape:10-Mil minimum thickness.

1. The PVC tape shall be manufactured by Trumbull Manufacturing Inc., Item No. 364-9975 or approved.
2. Tape installation methods shall conform to ASNI/AWWA C105 / A21.5 Standards.

3.00 EXECUTION

3.01 INSTALLATION

A. Installation shall be in accordance with the Manufacture's recommendations where applicable and per the Drawings. All work shall be performed per acceptable Industry Standards and as approved by Resident Inspector.

B. All ductile iron fittings shall be wrapped with polyethylene encasement tubing prior to installation.

END OF SECTION 404616

Intentionally Blank

IEPA Permit

Intentionally Blank

Illinois Environmental Protection Agency

2520 West Iles Avenue • P.O. Box 19276 • Springfield, Illinois • 62794-9276 • 217-782-3397

JB Pritzker, Governor **James Jennings**, Acting Director

HENEGHAN & ASSOC.
RECEIVED
FEB - 4 2026
JERSEYVILLE, IL

January 29, 2026

Gregory Bates
Illinois Alluvial Regional Water Company
1009 State Highway 16
Fieldon, IL 62052

Re: Illinois Alluvial Regional Water Company (Jersey County - IL0830020) Supplemental Approval for Water Main Extension Construction Permit **No. 1-0761-FY2024**

Dear Mr. Bates:

Supplemental approval is hereby given of the changes in the plans for the proposed waterworks improvements, in which the 30-inch PVC pipe was change to 36-inch HDPE and 3,998 feet of 8-inch and 141 feet of 6-inch water main was added to the project. These revised plans, consisting of 37 sheets, were prepared and submitted by your engineers, MECO-Heneghan Engineers, acting as your agents and are designated as, "Finished Water Transmission Main, Phase 1".

The original permit of the plans and specifications was given March 1, 2024.

This permit is void after January 28, 2027, unless construction on this project has started on or prior to that date.

Sincerely,

Chris Johnston, P.E.
Manager, Permit Section
Division of Public Water Supplies

CJ:GAZ

cc: MECO-Heneghan Engineers, LLC
Collinsville Regional Office

Intentionally Blank

ILLINOIS ENVIRONMENTAL PROTECTION AGENCY
2520 WEST ILES AVENUE, P.O. BOX 19276, SPRINGFIELD, ILLINOIS 62794-9276 · (217) 782-3397
JB PRITZKER, GOVERNOR **JAMES JENNINGS**, ACTING DIRECTOR

(217) 782-1724

February 28, 2025

Gregory Bates
Illinois Alluvial Regional
1009 State Hwy 16
Jerseyville, IL, 62052

Re: Illinois Alluvial Regional (IL0830020)
"Richwood, English, Jersey and Mississippi Townships - Phase 1"
Extension of Water Main Extension Construction Permit No. 0761-2024

Dear Mr. Bates:

In accordance with the request made through your engineers, MECO-Heneghan Engineers, LLC, in an email dated February 20 ,2025, our Construction Permit No. 0761-FY2024, issued on March 1, 2024, for "Richwood, English, Jersey and Mississippi Townships - Phase 1", is hereby extended.

This extension of the construction permit is void after February 27, 2026, unless construction on this project has started on or prior to that date.

Sincerely,

Chris Johnston

Chris Johnston, P.E.,
Manager, Permit Section,
Division of Public Water Supplies

CLJ:jb

cc: MECO-Heneghan Engineers, LLC
Collinsville Regional Office

Intentionally Blank

ILLINOIS ENVIRONMENTAL PROTECTION AGENCY
1021 North Grand Avenue, East; Post Office Box 19276; Springfield, IL 62794-9276
Division of Public Water Supplies Telephone 217/782-1724

PUBLIC WATER SUPPLY CONSTRUCTION PERMIT

SUBJECT: ILLINOIS ALLUVIAL REGIONAL WATER COMPANY (IL0830020)

HENEGHAN & ASSOC.
RECEIVED
MAR - 6 2024
JERSEYVILLE, IL

Permit Issued to:
Illinois Alluvial Regional Water Company
1009 State Highway 16
Fieldon, IL 62052

PERMIT NUMBER: 0761-FY2024

DATE ISSUED: March 1, 2024
PERMIT TYPE: Water Main Extension

The issuance of this permit is based on plans and specifications prepared by the engineers/architects indicated, and are identified as follows. This permit is issued for the construction and/or installation of the public water supply improvements described in this document, in accordance with the provisions of the "Environmental Protection Act", Title IV, Sections 14 through 17, and Title X, Sections 39 and 40, and is subject to the conditions printed on the last page of this permit and the ADDITIONAL CONDITIONS listed below.

FIRM: MECO-Heneghan Engineers, LLC
NUMBER OF PLAN SHEETS: 80
TITLE OF PLANS: "Finished Water Transmission Main, Phase 1"
APPLICATION RECEIVED DATE: February 6, 2024

PROPOSED IMPROVEMENTS:

Install approximately 80,400 feet of 30-inch water main.

ADDITIONAL CONDITIONS:

1. The proposed water main sample plan has been found to be acceptable. Satisfactory disinfection shall be demonstrated in accordance with the requirements of 35 Ill. Adm. Code 602.310. An operating permit must be obtained before the project is placed in service. The application for operating permit and supporting documents can either be mailed to this office or emailed to EPA.PWSPermits@illinois.gov. Use of the email address is preferred.
2. The issuance of the permit is only for the construction of the proposed improvements. An operating permit cannot be issued until all necessary corrosion control studies have been reviewed and approved by the Agency. An analogous water comparison to the existing finished water quality, if approved, is an acceptable desktop corrosion control study.
3. The permit approval is for the Application, Schedule B, and 80 plan sheets received on February 6, 2024.

DCC:GAZ

cc: MECO-Heneghan Engineers, LLC
Springfield Regional Office

David C. Cook, P.E.
Manager Permit Section
Division of Public Water Supplies

Intentionally Blank

Environmental Measures

Intentionally Blank

Illinois Department of Natural Resources

JB Pritzker, Governor • Natalie Phelps Finnie, Director
One Natural Resources Way • Springfield, Illinois 62702-1271
www.dnr.illinois.gov

March 26, 2024

SUBJECT: Permit No. DS2024030
Project Title: Illinois Alluvial Regional Water Company – Phase I (Construction PH I)
Illinois River, Tributary to Otter Creek
Jersey County

Illinois Alluvial Regional Water Company
1009 State Highway 16
Jerseyville, Illinois 62052

To Whom It May Concern:

Enclosed is Illinois Department of Natural Resources, Office of Water Resources Permit No. DS2024030 authorizing the subject project. This approval is based on the determination that the project complies with the rules for Construction in Floodways of Rivers, Lakes, and Streams (17 IAC Ch. I, Sec. 3700).

Per the email from Heneghan and Associates, PC, dated February 13, 2024, the proposed treatment plant and elevated storage tank are outside of IDNR/OWR jurisdiction in accordance with the rules for Construction in Floodways of River, Lakes, and Streams (17 IAC Ch. I, Sec. 3700). In that case, an IDNR/OWR permit would not be required for the proposed treatment plant and elevated storage tank. The email also indicated that the transmission lines will meet all terms and conditions of Statewide Permits Nos. 6 and 8. If the proposed transmission line will not meet the conditions of a statewide permit(s), please inform us.

The impoundment structures (e.g., lagoons) are being reviewed separately by IDNR/OWR's Dam Safety Section. **Please continue to work with the Dam Safety Section to ensure any necessary authorization is obtained for the proposed impoundment structures.**

This permit does not supersede any other federal, state or local authorizations that may be required for the project. Attached is a letter, dated March 21, 2024, from Bradley Hayes, with Illinois Department of Natural Resources. Please comply with the requirement(s) and recommendation(s) mentioned within the attached letter.

If any changes of the permitted work are found necessary, revised plans should be submitted promptly to this office for review and approval. Also, this permit expires on the date indicated in Condition (13). If unable to complete the work by that date, the permittee may make a written request for a time extension.

Please feel free to contact Jesse Tinch of my staff at 217/782-4545 if you have any questions concerning this authorization.

Sincerely,

William B. Milner Jr, P.E., CFM
Section Chief, Downstate Regulatory Programs

WBM: JT: EW

Enclosure

cc: USACE, St. Louis District (Regulatory Branch)
Heneghan and Associates, P.C. (Blaine Hanneken) w/ letter from Bradley Hayes
Jersey County (Derek Russell, Floodplain Administrator)
IDNR, NFIP Coordinator (Erin Conley)

PERMIT NO. DS2024030
DATE: March 26, 2024

State of Illinois
Department of Natural Resources, Office of Water Resources

Permission is hereby granted to:

ILLINOIS ALLUVIAL REGIONAL WATER COMPANY
1009 STATE HIGHWAY 16
JERSEYVILLE, ILLINOIS 62052

to construct five wells in Sections 29 and 32, Township 8 North, Range 13 West of the 3rd Principal Meridian in Jersey County,

in accordance with an application dated February 8, 2024, and the plans and specifications entitled:

CONTRACT "A"
WATER SUPPLY WELLS SITE PLAN / TYPICAL FENCE LAYOUT AND GRAVEL ACCESS ROAD DETAIL (Sheet No. C1, Plot Date 11/7/2023);
CHAIN-LINK FENCE DETAILS (Sheet No. C2, Plot Date 11/7/2023);
WELL PLAN / SECTION (Sheet No. M1, Plot Date 11/7/2023);
WELL DISCHARGE PIPING SECTION / VALVE PIT DETAILS (Sheet No. M2, Plot Date 11/7/2023);
WELL PLATFORM DETAILS (Sheet No. M3, Plot Date 11/7/2023);
WELL ACCESS STAIR DETAILS (Sheet No. M4, Plot Date 11/7/2023); and
TYPICAL DETAILS (Sheet No. M5, Plot Date 11/7/2023).

Examined and Recommended:

William B. Milner Jr, Section Chief
Downstate Regulatory Programs

Approval Recommended:

Loren A. Wobig, Director
Office of Water Resources

Approved:

Natalie Finnie, Director
Department of Natural Resources

This PERMIT is subject to the terms and special conditions contained herein

PERMIT NO. DS2024030

THIS PERMIT IS SUBJECT TO THE FOLLOWING CONDITIONS:

1) This permit is granted in accordance with the Rivers, Lakes, and Streams Act "615 ILCS 5."

2) This permit does not convey title to the permittee or recognize title of the permittee to any submerged or other lands, and furthermore, does not convey, lease or provide any right or rights of occupancy or use of the public or private property on which the activity or any part thereof will be located, or otherwise grant to the permittee any right or interest in or to the property, whether the property is owned or possessed by the State of Illinois or by any private or public party or parties.

3) This permit does not release the permittee from liability for damage to persons or property resulting from the work covered by this permit; and does not authorize any injury to private property or invasion of private rights.

4) This permit does not relieve the permittee of the responsibility to obtain other federal, state, or local authorizations required for the construction of the permitted activity; and if the permittee is required by law to obtain approvals from any federal or other state agency to do the work, this permit is not effective until the federal and state approvals are obtained. If construction does not begin within two years of the date of this permit, the permittee must submit the project to EcoCAT (https://dnr2.illinois.gov/EcoPublic/) for an updated consultation under the Illinois Endangered Species Protection Act and the Illinois Natural Areas Preservation Act.

5) The permittee shall, at the permittee's own expense, remove all temporary piling, cofferdams, false work, and material incidental to the construction of the project. If the permittee fails to remove such structures or materials, the Department may have removal made at the expense of the permittee.

6) In public waters, if future need for public navigation or other public interest by the state or federal government necessitates changes in any part of the structure or structures, such changes shall be made by and at the expense of the permittee or the permittee's successors as required by the Department or other properly constituted agency, within sixty (60) days from receipt of written notice of the necessity from the Department or other agency, unless a longer period of time is specifically authorized.

7) The execution and details of the work authorized shall be subject to the review and approval of the Department. Department personnel shall have the right of access to accomplish this purpose.

8) Starting work on the activity authorized will be considered full acceptance by the permittee of the terms and conditions of the permit.

9) The Department in issuing this permit has relied upon the statements and representations made by the permittee; if any substantive statement or representation made by the permittee is found to be false, this permit will be revoked; and when revoked, all rights of the permittee under the permit are voided.

10) In public waters, the permittee and the permittee's successors shall make no claim whatsoever to any interest in any accretions caused by the activity.

11) In issuing this permit, the Department does not ensure the adequacy of the design or structural strength of the structure or improvement.

12) Noncompliance with the conditions of this permit will be considered grounds for revocation.

13) If the construction activity permitted is not completed on or before December 31, 2027, this permit shall cease and be null and void.

ILLINOIS DEPARTMENT OF NATURAL RESOURCES

Illinois Department of Natural Resources

JB Pritzker, Governor

One Natural Resources Way Springfield, Illinois 62702-1271
www.dnr.illinois.gov

Natalie Phelps Finnie, Director

March 21, 2024

Enclosure

Jesse Tinch, P.E., CFM
Regulatory Engineer
IDNR, Office of Water Resources
One Natural Resources Way
Springfield, IL 62702-1271

RE: Illinois Alluvial Regional Water Company - Phase 1 (Construction PH I) Consultation Program
EcoCAT Review #2410610 [S20230184]
Jersey County

Dear Mr. Tinch:

The Department has received your submission for this project for the purposes of consultation pursuant to the *Illinois Endangered Species Protection Act* [520 ILCS 10/11], the *Illinois Natural Areas Preservation Act* [525 ILCS 30/17], and Title 17 *Illinois Administrative Code* Part 1075.

The proposed action consists of the installation of alluvial wells in the Illinois River Bottoms and place a new Life Softening water treatment plant near the wells (39.101°, -90.568°).

The Illinois Natural Heritage Database shows the following protected resources may be in the vicinity of the project location:

State Threatened or Endangered Species
Indiana Bat (*Myotis sodalis*)
Timber Rattlesnake (*Crotalus horridus*)

Due to the project scope and proximity to protected resources the Department offers the following comments and recommends the following actions be taken to avoid adversely impacting listed species in the vicinity of the project:

Indiana Bat & Timber Rattlesnake
The Department has determined that impacts to these species are unlikely in the OWR permitted areas west of the Great River Road.

However, the project proponent should be aware any work that may occur east of the Great River Road will require further consultation with the Department.

Cultural Review
The project was also reviewed for cultural resource impacts and was determined to be in compliance with the Illinois State Agency Historic Resources Preservation Act.

To: Heneghan and Associates, P.C.

Consultation on the part of the Department is closed, unless the applicant desires additional information or advice related to this proposal. Consultation for Part 1075 is valid for two years unless new information becomes available which was not previously considered; the proposed action is modified; or additional species, essential habitat, or Natural Areas are identified in the vicinity. If the action has not been implemented within two years of the date of this letter, or any of the above listed conditions develop, a new consultation is necessary.

The natural resource review reflects the information existing in the Illinois Natural Heritage Database at the time of the project submittal and should not be regarded as a final statement on the project being considered, nor should it be a substitute for detailed site surveys or field surveys required for environmental assessments. If additional protected resources are unexpectedly encountered during the project's implementation, the applicant must comply with the applicable statutes and regulations.

This letter does not serve as permission to take any listed or endangered species. As a reminder, no take of an endangered species is permitted without an Incidental Take Authorization or the required permits. Anyone who takes a listed or endangered species without an Incidental Take Authorization or required permit may be subject to criminal and/or civil penalties pursuant to the *Illinois Endangered Species Act*, the *Fish and Aquatic Life Act*, the *Wildlife Code* and other applicable authority.

The Department also offers the following conservation measures be considered to help protect native wildlife and enhance natural areas in the project area:

If temporary or permanent lighting is required, the Department recommends the following lighting recommendation to minimize adverse effects to wildlife:

- All lighting should be fully shielded fixtures that emit no light upward.
- Only "warm-white" or filtered LEDs (CCT < 3,000 K; S/P ratio < 1.2) should be used to minimize blue emission.
- Only light the exact space with the amount (lumens) needed to meet facility safety requirement.
- If LEDs are to be used, avoid the temptation to over-light based on the higher luminous efficiency of LEDs.

If erosion control blanket is to be used, the Department also recommends that wildlife-friendly plastic-free blanket be used around wetlands and adjacent to natural areas, if not feasible to implement project wide, to prevent the entanglement of native wildlife.

Please contact me with any questions about this review.
Sincerely,

Bradley Hayes
Manager, Impact Assessment Section
Division of Real Estate Services and Consultation
Office of Realty & Capital Planning
Illinois Department of Natural Resources
One Natural Resources Way
Springfield, IL 62702
Bradley.Hayes@Illinois.gov
Phone: (217) 782-0031

ILLINOIS DEPARTMENT OF NATURAL RESOURCES
OFFICE OF WATER RESOURCES
ONE NATURAL RESOURCES WAY
SPRINGFIELD, ILLINOIS 62702-1271

STATEWIDE PERMIT NO. 6

AUTHORIZING MINOR NON-OBSTRUCTIVE FLOODWAY CONSTRUCTION ACTIVITIES

PURPOSE

The purpose of this Statewide Permit is to authorize the construction of minor floodway activities which, by complying with the terms and conditions of this permit, are determined to have insignificant impact on those factors which are under the jurisdiction of the Department of Natural Resources, Office of Water Resources (IDNR/OWR). It is not necessary to submit applications to or obtain individual permits from IDNR/OWR for floodway construction activities complying with this permit. If a project would not meet the terms and conditions of this permit, a formal permit application must be submitted for review and appropriate determination.

APPLICABILITY

This permit applies to the floodway land of all Illinois rivers, lakes and streams under the Department's jurisdiction except Lake Michigan and those in Lake, McHenry, Cook, DuPage, Kane and Will Counties for which regulatory floodways have been designated pursuant to 17 Illinois Administrative Code 3708, but does not authorize any project which conflicts with a federal, state or local project, improvement or rule.

The following activities (not involving fill or positive change in grade) are covered by this permit:

1. The construction of underground utility lines not crossing a lake or stream, wells, and septic tanks;

2. The construction of light poles, sign posts and similar structures;

3. The construction of sidewalks, driveways, athletic fields (excluding fences), patios and similar surfaces which are built at grade;

4. The construction of properly anchored, unwalled, open structures such as playground equipment, pavilions, and carports;

5. The placement of properly anchored buildings not exceeding seventy (70) square feet in size, nor ten (10) feet in any dimension (e.g. animal shelters and tool sheds). Only one such building on a property shall be authorized by this permit. If such a building already exists on a property, this permit does not authorize any additional building; and

6. The raising of existing buildings, provided no changes are made to the outside dimensions of the building and provided the proposed raising would not involve the placement of fill to accomplish the raising. The backfilling of an existing basement is permissible.

Other minor construction activities (including those involving fill or positive change in grade), although not specifically listed above, may comply with the intent of this Statewide Permit and, therefore, may be authorized by this permit. For those projects not specifically listed, however, plans must be submitted to the IDNR/OWR for review and an appropriate determination.

SPECIAL CONDITIONS

1. This permit does not authorize any construction in the normal channel, i.e. below the usual overtopping or flooding elevation, of any river, lake or stream.

2. In the event the placement of fill material is necessary to accomplish the purpose of the project, the normal application for permit process must be followed or plans maybe submitted to the IDNR/OWR for an initial review and an appropriate determination as to whether or not this statewide permit is applicable to the project. This permit does not authorize the placement of any fill material (except for the backfilling of an existing basement as indicated in item 6 above) or positive change in grade in the floodway in conjunction with any of the 6 specified activities noted under “Applicability.”

3. If there is any question of the permissibility of any activity under this permit, the IDNR/OWR shall be contacted for a determination.

GENERAL CONDITIONS OF THE STATEWIDE PERMIT

1. This permit is granted in accordance with the Rivers, Lakes and Streams Act, 615 ILCS 5 (2000 State Bar Edition).

2. This permit does not convey title to any permittee or recognize title of any permittee to any submerged or other lands, and furthermore, does not convey, lease or provide any right or rights of occupancy or use of the public or private property on which the project or any part thereof will be located, or otherwise grant to any permittee any right or interest in or to the property, whether the property is owned or possessed by the State of Illinois or by any private or public party or parties.

3. This permit does not release any permittee from liability for damage to persons or property resulting from the work covered by this permit, and does not authorize any injury to private property or invasion of private rights.

4. This permit does not relieve any permittee of the responsibility to obtain other federal, state or local authorizations required for the construction of the permitted activity; and if the permittee is required by law to obtain approval from any federal or other state agency to do the work, the authorization is not effective until the federal and state approvals are obtained.

5. In issuing this permit, the Department of Natural Resources does not approve the adequacy of the design or structural strength of any structure or improvement authorized by this permit.

6. This Statewide Permit shall remain in effect until such time as it is modified, suspended, or revoked by the Department of Natural Resources.

This Statewide Permit was issued on September 15, 1993 and last modified or corrected September 25, 2002.

APPROVED:

Brent Manning, Director
Department of Natural Resources

EXAMINED AND RECOMMENDED:

Martin J. Stralow, Manager
Division of Water Resource Management

APPROVAL RECOMMENDED:

Donald R. Vonnahme, Director
Office of Water Resources

Intentionally Blank

ILLINOIS DEPARTMENT OF NATURAL RESOURCES
OFFICE OF WATER RESOURCES
ONE NATURAL RESOURCES WAY
SPRINGFIELD, ILLINOIS 62702-1271

STATEWIDE PERMIT NO. 8

AUTHORIZING THE CONSTRUCTION OF UNDERGROUND
PIPELINE AND UTILITY CROSSINGS

PURPOSE

The purpose of this Statewide Permit is to authorize the construction of underground pipeline and utility crossings which have insignificant impact on those factors under the jurisdiction of the Department of Natural Resources, Office of Water Resources (IDNR/OWR). It is no longer necessary to submit applications to, or obtain individual permits from, IDNR/OWR for activities meeting the terms and conditions of this permit. If a project would not meet all of the terms and conditions of this permit, a formal permit application must be submitted.

APPLICABILITY

This permit applies to all directionally bored pipeline and utility crossings placed beneath the beds of all Illinois rivers, lakes and streams under the Department's jurisdiction. This permit also applies to other pipeline and utility crossings placed beneath the beds of all Illinois rivers, lakes and streams under the Department's jurisdiction except those in Lake, McHenry, Cook, DuPage, Kane and Will Counties for which regulatory floodways have been designated pursuant to 17 Illinois Administrative Code 3708,the public waters of the state, and the following:

1. The meandered lakes
2. Loon Lake (Lake County)
3. Cedar Lake (Lake County)
4. Ogden Slip
5. Mackinaw River
6. Kickapoo Creek in Peoria County
7. Big Creek in Hardin County
8. Lusk Creek in Pope County
9. Middle Fork of the Vermilion River in Vermilion County

10. Kishwaukee River in McHenry County

11. Clear Creek in Union and Alexander Counties

12. Embarras River in Jasper and Cumberland Counties

COORDINATION WITH OTHER AGENCIES

This permit does not supersede nor relieve any permittee's responsibility to obtain other federal, state or local permits. The local (county or municipal) regulatory official and the U. S. Army Corps of Engineers' regulatory functions office should be contacted to obtain any required permits. Also, for utility crossings carrying materials which could cause water pollution, potentially impacted owners of public water supplies should be notified.

SPECIAL CONDITIONS

In order to be authorized by this permit, an underground pipeline or utility crossing must meet the following special conditions.

1. In all cases, the crossing shall be placed beneath the bed of the river, lake or stream and, unless the crossing is encased in concrete or entrenched in bedrock, a minimum of three (3) feet of cover shall be provided. The river, lake or streambed shall be returned to its original condition.

2. Disturbance of streamside vegetation shall be kept to a minimum during construction to prevent erosion and sedimentation. All disturbed floodway areas, including the stream banks, shall be restored to their original contours and seeded or otherwise stabilized upon completion of construction.

3. A utility crossing carrying material which may cause water pollution as defined by the Environmental Protection Act, 415ILCS 5 (1996 State Bar Edition), shall be provided with shut-off valves on each side of the body of water to be crossed.

4. If blasting is to be utilized in the construction of the crossing, the Permittee shall notify the Illinois Department of Natural Resources, Office of Resource Conservation at least ten (10) days prior to the blasting date to allow monitoring of any related fish kills.

GENERAL CONDITIONS OF THE STATEWIDE PERMIT

1. This permit is granted in accordance with the Rivers, Lakes and Streams Act, 615 ILCS 5 (1996 State Bar Edition).

2. This permit does not convey title to any permittee or recognize title of any permittee to any submerged or other lands, and furthermore, does not convey, lease or provide any right or rights of occupancy or use of the public or private property on which the project or any part thereof will be located, or otherwise grant to any permittee any right or interest in or to the property, whether the property is owned or possessed by the State of Illinois or by any private or public party or parties.

3. This permit does not release any permittee from liability for damage to persons or property resulting from any activity covered by this permit, and does not authorize any injury to private property or invasion of private rights.

4. This permit does not relieve any permittee of the responsibility to obtain other federal, state or local authorizations required for the construction of the permitted activity; and if any permittee is required by law to obtain approval from any federal or other state agency to do the work, authorization granted by this permit is not effective until the federal and state approvals are obtained.

5. The permittee shall, at the permittee's own expense, remove all temporary piling, cofferdams, false work, and material incidental to the construction of the project, from the floodway in which the work is done. If the permittee fails to remove such structures or materials, the Department may have removal made at the expense of the permittee. If the activity is on a public body of water and if future need for public navigation or public interests, by the state or federal government, necessitates changes in any part of the structure or structures, such changes shall be made by and at the expense of the permittee or permittee's successors as required by the Department of Natural Resources or other properly constituted agency, within sixty (60) days from receipt of written notice of the necessity from the Department or other agency, unless a longer period of time is specifically authorized.

6. In issuing this permit, the Department of Natural Resources does not approve the adequacy of the design or structural strength of any structure or improvement authorized by this permit.

7. This Statewide Permit shall remain in effect until such time as it is modified, suspended, or revoked by the Department of Natural Resources.

This Statewide Permit was issued on August 1, 1986 and last modified or corrected June 15, 1998.

APPROVED:

Brent Manning, Director
Department of Natural Resources

EXAMINED AND RECOMMENDED:

Martin J. Stralow, Manager
Division of Water Resource Management

APPROVAL RECOMMENDED:

Donald R. Vonnahme, Director
Office of Water Resources

Illinois Department of Natural Resources
JB Pritzker, Governor • Natalie Phelps Finnie, Director
One Natural Resources Way • Springfield, Illinois 62702-1271
www.dnr.illinois.gov

July 27, 2023
Mr. Jaxon Brunaugh
Heneghan & Associates, P.C. - Jerseyville
New York, NY 10001

RE: IL Alluvial Regional Water Company
Consultation Program
EcoCAT Review #2401133
Jersey County

Dear Mr. Brunaugh:

The Department has received your submission for this project for the purposes of consultation pursuant to the *Illinois Endangered Species Protection Act* [520 ILCS 10/11], the *Illinois Natural Areas Preservation Act* [525 ILCS 30/17], and Title 17 *Illinois Administrative Code* Part 1075, Title 17 *Illinois Administrative Code* Part 1075, and Title 17 *Illinois Administrative Code* Part 1090.

The project is described as "Develop new wells, construct water treatment plant, install transmission lines to serve entities". The work will occur within Jersey and Macoupin Counties.

The Illinois Natural Heritage Database shows the following protected resources may be in the vicinity of the project location:

State Threatened or Endangered Species
Indiana Bat (*Myotis sodalis*)
Timber Rattlesnake (*Crotalus horridus*)

Due to the project scope and proximity to protected resources the Department recommends the following actions be taken to avoid adversely impacting listed species in the vicinity of the project:

Indiana Bat
This project is in the vicinity of records for the State-listed Indiana bat. Due to the potential presence of the species on the project site, the Department recommends any tree removal occurs between November 15th and March 31st when bats are likely hibernating off site. If these dates cannot be accommodated, a field visit should be performed by a qualified individual (biologist, forester, or others who have been trained accordingly) to determine if suitable trees are present to provide habitat. If suitable habitat trees are found within the project area, they should be clearly flagged and/or marked and shall not be cut between April 1st –November 14th when the bats are

most likely to be present. Suitable habitat trees are defined as trees ≥5 inches diameter breast height (dbh), with exfoliating bark and other features potentially utilized by roosting bats. All non-suitable trees may be cut at any time.

Timber Rattlesnake

IDNR recommends all work be started and completed between the dates of November 1st and March 31st. The timber rattlesnake would be hibernating during this period and is not likely to be adversely impacted from construction activity. If these dates cannot be accommodated, then the Department recommends the following measures be taken:

1. The site should be thoroughly surveyed by a qualified biologist for timber rattlesnakes before work begins.
2. All onsite personnel should be educated about this species and instructed to contact the Department immediately if a turtle is encountered in the project area.
3. Fliers with photos of adult and juvenile timber rattlesnakes, as well as snake life history information, should be distributed to onsite personnel.
4. Flier should contain contact information for the Department.
5. State-listed species may not be handled without the appropriate permits pursuant to the Illinois Endangered Species Protection Act.
6. Exclusionary fencing should be installed around the work area (where appropriate), trenched into the ground, and inspected daily for turtle presence.
7. Excavations should be inspected daily for trapped wildlife and safely covered overnight.

Given the above recommendations are adopted, the Department has determined that impacts to the Indiana bat and timber rattlesnake are unlikely.

In accordance with 17 Ill. Adm. Code 1075.40(h), please notify the Department of your decision regarding these recommendations.

Interagency Wetland Policy Act

This project was reviewed for compliance with Title 17 *Illinois Administrative Code* Part 1090 of the *Interagency Wetland Policy Act* and was determined to be in compliance. Consultation for Part 1090 is valid for three years.

Consultation on the part of the Department is closed unless the applicant desires additional information or advice related to this proposal. Consultation for Part 1075 is valid for two years unless new information becomes available which was not previously considered; the proposed action is modified; or additional species, essential habitat, or Natural Areas are identified in the vicinity. If the action has not been implemented within two years of the date of this letter, or any of the above listed conditions develop, a new consultation is necessary.

The natural resource review reflects the information existing in the Illinois Natural Heritage Database at the time of the project submittal and should not be regarded as a final statement on the project being considered, nor should it be a substitute for detailed site surveys or field surveys required for environmental assessments. If additional protected resources are unexpectedly

encountered during the project's implementation, the applicant must comply with the applicable statutes and regulations.

This letter does not serve as permission to take any listed or endangered species. As a reminder, no take of an endangered species is permitted without an Incidental Take Authorization or the required permits. Anyone who takes a listed or endangered species without an Incidental Take Authorization or required permit may be subject to criminal and/or civil penalties pursuant to the *Illinois Endangered Species Act*, the *Fish and Aquatic Life Act*, the *Wildlife Code* and other applicable authority.

The Department also offers the following conservation measures be considered to help protect native wildlife and enhance natural areas in the project area:

If erosion control blanket is to be used, the Department recommends that wildlife-friendly plastic-free blanket be used around wetlands and adjacent to natural areas, if not feasible to implement project wide, to prevent the entanglement of native wildlife.

Please contact me with any questions about this review.
Sincerely,

Adam Rawe
Resource Planner
Division of Real Estate Services and Consultation
Office of Realty & Capital Planning
Illinois Department of Natural Resources
One Natural Resources Way
Springfield, IL 62702
Adam.Rawe@Illinois.gov
Phone: (217) 785-4991

Intentionally Blank

EcoCAT
Ecological Compliance Assessment Tool

ILLINOIS DEPARTMENT OF NATURAL RESOURCES

Applicant: Heneghan & Associates, P.C. - Jerseyville
Contact: Jaxon Brunaugh
Address: 1004 State Highway 16
Jerseyville, IL 62052

IDNR Project Number: 2401133
Date: 07/20/2023
Alternate Number: 1812212

Project: IL Alluvial Regional Water Company
Address: Jersey County/ Macoupin County , Nutwood

Description: Develop New Wells, Construct Water Treatment Plant, Install transmission lines to serve entities

Natural Resource Review Results

Consultation for Endangered Species Protection and Natural Areas Preservation (Part 1075)

The Illinois Natural Heritage Database shows the following protected resources may be in the vicinity of the project location:

Indiana Bat *(Myotis sodalis)*
Timber Rattlesnake *(Crotalus horridus)*

Wetland Review (Part 1090)

The Illinois Wetlands Inventory shows wetlands within 250 feet of the project location.

An IDNR staff member will evaluate this information and contact you to request additional information or to terminate consultation if adverse effects are unlikely.

Location

The applicant is responsible for the accuracy of the location submitted for the project.

County: Jersey

Township, Range, Section:
8N, 13W, 26
8N, 13W, 27
8N, 13W, 28
8N, 13W, 29

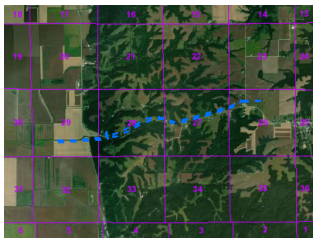

IL Department of Natural Resources Contact
Adam Rawe
217-785-5500
Division of Ecosystems & Environment

Government Jurisdiction
IL Environmental Protection Agency
n/a
1021 North Grand Ave. E.
P.O. Box 19276
Springfield , Illinois 62794 -9276

Disclaimer

The Illinois Natural Heritage Database cannot provide a conclusive statement on the presence, absence, or condition of natural resources in Illinois. This review reflects the information existing in the Database at the time of this inquiry, and should not be regarded as a final statement on the site being considered, nor should it be a substitute for detailed site surveys or field surveys required for environmental assessments. If additional protected resources are encountered during the project's implementation, compliance with applicable statutes and regulations is required.

Terms of Use

By using this website, you acknowledge that you have read and agree to these terms. These terms may be revised by IDNR as necessary. If you continue to use the EcoCAT application after we post changes to these terms, it will mean that you accept such changes. If at any time you do not accept the Terms of Use, you may not continue to use the website.

1. The IDNR EcoCAT website was developed so that units of local government, state agencies and the public could request information or begin natural resource consultations on-line for the Illinois Endangered Species Protection Act, Illinois Natural Areas Preservation Act, and Illinois Interagency Wetland Policy Act. EcoCAT uses databases, Geographic Information System mapping, and a set of programmed decision rules to determine if proposed actions are in the vicinity of protected natural resources. By indicating your agreement to the Terms of Use for this application, you warrant that you will not use this web site for any other purpose.

2. Unauthorized attempts to upload, download, or change information on this website are strictly prohibited and may be punishable under the Computer Fraud and Abuse Act of 1986 and/or the National Information Infrastructure Protection Act.

3. IDNR reserves the right to enhance, modify, alter, or suspend the website at any time without notice, or to terminate or restrict access.

Security

EcoCAT operates on a state of Illinois computer system. We may use software to monitor traffic and to identify unauthorized attempts to upload, download, or change information, to cause harm or otherwise to damage this site. Unauthorized attempts to upload, download, or change information on this server is strictly prohibited by law.

Unauthorized use, tampering with or modification of this system, including supporting hardware or software, may subject the violator to criminal and civil penalties. In the event of unauthorized intrusion, all relevant information regarding possible violation of law may be provided to law enforcement officials.

Privacy

EcoCAT generates a public record subject to disclosure under the Freedom of Information Act. Otherwise, IDNR uses the information submitted to EcoCAT solely for internal tracking purposes.

Illinois Department of Natural Resources
JB Pritzker, Governor • Natalie Phelps Finnie, Director
One Natural Resources Way • Springfield, Illinois 62702-1271
www.dnr.illinois.gov

July 27, 2023
Mr. Jaxon Brunaugh
Heneghan & Associates, P.C. - Jerseyville
New York, NY 10001

RE: IL Alluvial Regional Water Company
Consultation Program
EcoCAT Review #2401141
Jersey County

Dear Mr. Brunaugh:

The Department has received your submission for this project for the purposes of consultation pursuant to the *Illinois Endangered Species Protection Act* [520 ILCS 10/11], the *Illinois Natural Areas Preservation Act* [525 ILCS 30/17], and Title 17 *Illinois Administrative Code* Part 1075, Title 17 *Illinois Administrative Code* Part 1075, and Title 17 *Illinois Administrative Code* Part 1090.

The project is described as "Develop new wells, construct water treatment plant, install transmission lines to serve entities". The work will occur within Jersey and Macoupin Counties.

The Illinois Natural Heritage Database shows the following protected resources may be in the vicinity of the project location:

State Threatened or Endangered Species
Indiana Bat (*Myotis sodalis*)

Due to the project scope and proximity to protected resources the Department recommends the following actions be taken to avoid adversely impacting listed species in the vicinity of the project:

Indiana Bat
This project is in the vicinity of records for the State-listed Indiana bat. Due to the potential presence of the species on the project site, the Department recommends any tree removal occurs between November 15th and March 31st when bats are likely hibernating off site. If these dates cannot be accommodated, a field visit should be performed by a qualified individual (biologist, forester, or others who have been trained accordingly) to determine if suitable trees are present to provide habitat. If suitable habitat trees are found within the project area, they should be clearly flagged and/or marked and shall not be cut between April 1st –November 14th when the bats are most likely to be present. Suitable habitat trees are defined as trees ≥5 inches diameter breast

height (dbh), with exfoliating bark and other features potentially utilized by roosting bats. All non-suitable trees may be cut at any time.

Given the above recommendations are adopted, the Department has determined that impacts to the Indiana bat are unlikely.

In accordance with 17 Ill. Adm. Code 1075.40(h), please notify the Department of your decision regarding these recommendations.

Interagency Wetland Policy Act

This project was reviewed for compliance with Title 17 *Illinois Administrative Code* Part 1090 of the *Interagency Wetland Policy Act* and was determined to be in compliance. Consultation for Part 1090 is valid for three years.

Consultation on the part of the Department is closed unless the applicant desires additional information or advice related to this proposal. Consultation for Part 1075 is valid for two years unless new information becomes available which was not previously considered; the proposed action is modified; or additional species, essential habitat, or Natural Areas are identified in the vicinity. If the action has not been implemented within two years of the date of this letter, or any of the above listed conditions develop, a new consultation is necessary.

The natural resource review reflects the information existing in the Illinois Natural Heritage Database at the time of the project submittal and should not be regarded as a final statement on the project being considered, nor should it be a substitute for detailed site surveys or field surveys required for environmental assessments. If additional protected resources are unexpectedly encountered during the project's implementation, the applicant must comply with the applicable statutes and regulations.

This letter does not serve as permission to take any listed or endangered species. As a reminder, no take of an endangered species is permitted without an Incidental Take Authorization or the required permits. Anyone who takes a listed or endangered species without an Incidental Take Authorization or required permit may be subject to criminal and/or civil penalties pursuant to the *Illinois Endangered Species Act*, the *Fish and Aquatic Life Act*, the *Wildlife Code* and other applicable authority.

The Department also offers the following conservation measures be considered to help protect native wildlife and enhance natural areas in the project area:

If erosion control blanket is to be used, the Department recommends that wildlife-friendly plastic-free blanket be used around wetlands and adjacent to natural areas, if not feasible to implement project wide, to prevent the entanglement of native wildlife.

Please contact me with any questions about this review.
Sincerely,

Adam Rawe
Resource Planner
Division of Real Estate Services and Consultation
Office of Realty & Capital Planning
Illinois Department of Natural Resources
One Natural Resources Way
Springfield, IL 62702
Adam.Rawe@Illinois.gov
Phone: (217) 785-4991

Intentionally Blank

EcoCAT
Ecological Compliance Assessment Tool

ILLINOIS DEPARTMENT OF NATURAL RESOURCES

Applicant: Heneghan & Associates, P.C. - Jerseyville
Contact: Jaxon Brunaugh
Address: 1004 State Highway 16
Jerseyville, IL 62052

IDNR Project Number: 2401141
Date: 07/20/2023
Alternate Number: 1812213

Project: IL Alluvial Regional Water Company
Address: Jersey County/ Macoupin County , Fieldon

Description: Develop New Wells, Construct Water Treatment Plant, Install transmission lines to serve entities

Natural Resource Review Results

Consultation for Endangered Species Protection and Natural Areas Preservation (Part 1075)

The Illinois Natural Heritage Database shows the following protected resources may be in the vicinity of the project location:

Indiana Bat *(Myotis sodalis)*
Indiana Bat *(Myotis sodalis)*

Wetland Review (Part 1090)

The Illinois Wetlands Inventory shows wetlands within 250 feet of the project location.

An IDNR staff member will evaluate this information and contact you to request additional information or to terminate consultation if adverse effects are unlikely.

Location

The applicant is responsible for the accuracy of the location submitted for the project.

County: Jersey

Township, Range, Section:
8N, 11W, 19
8N, 12W, 20
8N, 12W, 21
8N, 12W, 22
8N, 12W, 23
8N, 12W, 24
8N, 12W, 29
8N, 12W, 30
8N, 13W, 25
8N, 13W, 26

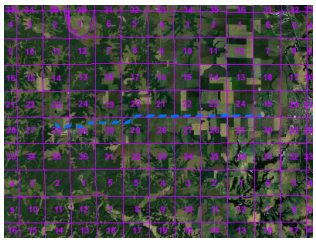

IL Department of Natural Resources Contact
Adam Rawe
217-785-5500
Division of Ecosystems & Environment

Government Jurisdiction
IL Environmental Protection Agency
IL
1021 North Grand Ave. E.
P.O. Box 19276
Springfield , Illinois 62794 -9276

Disclaimer

The Illinois Natural Heritage Database cannot provide a conclusive statement on the presence, absence, or condition of natural resources in Illinois. This review reflects the information existing in the Database at the time of this inquiry, and should not be regarded as a final statement on the site being considered, nor should it be a substitute for detailed site surveys or field surveys required for environmental assessments. If additional protected resources are encountered during the project's implementation, compliance with applicable statutes and regulations is required.

Terms of Use

By using this website, you acknowledge that you have read and agree to these terms. These terms may be revised by IDNR as necessary. If you continue to use the EcoCAT application after we post changes to these terms, it will mean that you accept such changes. If at any time you do not accept the Terms of Use, you may not continue to use the website.

1. The IDNR EcoCAT website was developed so that units of local government, state agencies and the public could request information or begin natural resource consultations on-line for the Illinois Endangered Species Protection Act, Illinois Natural Areas Preservation Act, and Illinois Interagency Wetland Policy Act. EcoCAT uses databases, Geographic Information System mapping, and a set of programmed decision rules to determine if proposed actions are in the vicinity of protected natural resources. By indicating your agreement to the Terms of Use for this application, you warrant that you will not use this web site for any other purpose.

2. Unauthorized attempts to upload, download, or change information on this website are strictly prohibited and may be punishable under the Computer Fraud and Abuse Act of 1986 and/or the National Information Infrastructure Protection Act.

3. IDNR reserves the right to enhance, modify, alter, or suspend the website at any time without notice, or to terminate or restrict access.

Security

EcoCAT operates on a state of Illinois computer system. We may use software to monitor traffic and to identify unauthorized attempts to upload, download, or change information, to cause harm or otherwise to damage this site. Unauthorized attempts to upload, download, or change information on this server is strictly prohibited by law.

Unauthorized use, tampering with or modification of this system, including supporting hardware or software, may subject the violator to criminal and civil penalties. In the event of unauthorized intrusion, all relevant information regarding possible violation of law may be provided to law enforcement officials.

Privacy

EcoCAT generates a public record subject to disclosure under the Freedom of Information Act. Otherwise, IDNR uses the information submitted to EcoCAT solely for internal tracking purposes.

Illinois Department of Natural Resources
JB Pritzker, Governor • Natalie Phelps Finnie, Director
One Natural Resources Way • Springfield, Illinois 62702-1271
www.dnr.illinois.gov

July 27, 2023
Mr. Jaxon Brunaugh
Heneghan & Associates, P.C. - Jerseyville
New York, NY 10001

RE: IL Alluvial Regional Water Company
Consultation Program
EcoCAT Review #2401148
Jersey County

Dear Mr. Brunaugh:

The Department has received your submission for this project for the purposes of consultation pursuant to the *Illinois Endangered Species Protection Act* [520 ILCS 10/11], the *Illinois Natural Areas Preservation Act* [525 ILCS 30/17], and Title 17 *Illinois Administrative Code* Part 1075, Title 17 *Illinois Administrative Code* Part 1075, and Title 17 *Illinois Administrative Code* Part 1090.

The project is described as "Develop new wells, construct water treatment plant, install transmission lines to serve entities". The work will occur within Jersey and Macoupin Counties.

The Illinois Natural Heritage Database shows the following protected resources may be in the vicinity of the project location:

State Threatened or Endangered Species
Indiana Bat (*Myotis sodalis*)

Due to the project scope and proximity to protected resources the Department recommends the following actions be taken to avoid adversely impacting listed species in the vicinity of the project:

Indiana Bat
This project is in the vicinity of records for the State-listed Indiana bat. Due to the potential presence of the species on the project site, the Department recommends any tree removal occurs between November 15th and March 31st when bats are likely hibernating off site. If these dates cannot be accommodated, a field visit should be performed by a qualified individual (biologist, forester, or others who have been trained accordingly) to determine if suitable trees are present to provide habitat. If suitable habitat trees are found within the project area, they should be clearly flagged and/or marked and shall not be cut between April 1st –November 14th when the bats are most likely to be present. Suitable habitat trees are defined as trees ≥5 inches diameter breast

height (dbh), with exfoliating bark and other features potentially utilized by roosting bats. All non-suitable trees may be cut at any time.

Given the above recommendations are adopted, the Department has determined that impacts to the Indiana bat are unlikely.

In accordance with 17 Ill. Adm. Code 1075.40(h), please notify the Department of your decision regarding these recommendations.

Interagency Wetland Policy Act

This project was reviewed for compliance with Title 17 *Illinois Administrative Code* Part 1090 of the *Interagency Wetland Policy Act* and was determined to be in compliance. Consultation for Part 1090 is valid for three years.

Consultation on the part of the Department is closed unless the applicant desires additional information or advice related to this proposal. Consultation for Part 1075 is valid for two years unless new information becomes available which was not previously considered; the proposed action is modified; or additional species, essential habitat, or Natural Areas are identified in the vicinity. If the action has not been implemented within two years of the date of this letter, or any of the above listed conditions develop, a new consultation is necessary.

The natural resource review reflects the information existing in the Illinois Natural Heritage Database at the time of the project submittal and should not be regarded as a final statement on the project being considered, nor should it be a substitute for detailed site surveys or field surveys required for environmental assessments. If additional protected resources are unexpectedly encountered during the project's implementation, the applicant must comply with the applicable statutes and regulations.

This letter does not serve as permission to take any listed or endangered species. As a reminder, no take of an endangered species is permitted without an Incidental Take Authorization or the required permits. Anyone who takes a listed or endangered species without an Incidental Take Authorization or required permit may be subject to criminal and/or civil penalties pursuant to the *Illinois Endangered Species Act*, the *Fish and Aquatic Life Act*, the *Wildlife Code* and other applicable authority.

The Department also offers the following conservation measures be considered to help protect native wildlife and enhance natural areas in the project area:

If erosion control blanket is to be used, the Department recommends that wildlife-friendly plastic-free blanket be used around wetlands and adjacent to natural areas, if not feasible to implement project wide, to prevent the entanglement of native wildlife.

Please contact me with any questions about this review.
Sincerely,

Adam Rawe
Resource Planner
Division of Real Estate Services and Consultation
Office of Realty & Capital Planning
Illinois Department of Natural Resources
One Natural Resources Way
Springfield, IL 62702
Adam.Rawe@Illinois.gov
Phone: (217) 785-4991

Intentionally Blank

EcoCAT
Ecological Compliance Assessment Tool

ILLINOIS DEPARTMENT OF NATURAL RESOURCES

Applicant:	Heneghan & Associates, P.C. - Jerseyville	*IDNR Project Number:*	2401148
Contact:	Jaxon Brunaugh	*Date:*	07/20/2023
Address:	1004 State Highway 16 Jerseyville, IL 62052	*Alternate Number:*	1812214

Project: IL Alluvial Regional Water Company
Address: Jersey County/ Macoupin County , Jerseyville

Description: Develop New Wells, Construct Water Treatment Plant, Install transmission lines to serve entities
06/22/2018
Heneghan & Associates, P.C. - Jerseyville 1812214

Natural Resource Review Results

Consultation for Endangered Species Protection and Natural Areas Preservation (Part 1075)

The Illinois Natural Heritage Database shows the following protected resources may be in the vicinity of the project location:

Indiana Bat *(Myotis sodalis)*
Indiana Bat *(Myotis sodalis)*

Wetland Review (Part 1090)

The Illinois Wetlands Inventory shows wetlands within 250 feet of the project location.

An IDNR staff member will evaluate this information and contact you to request additional information or to terminate consultation if adverse effects are unlikely.

Location

The applicant is responsible for the accuracy of the location submitted for the project.

County: Jersey

Township, Range, Section:
7N, 11W, 2
7N, 11W, 3
7N, 11W, 4
8N, 11W, 30
8N, 11W, 31
8N, 11W, 32
8N, 11W, 33
8N, 11W, 35
8N, 11W, 36

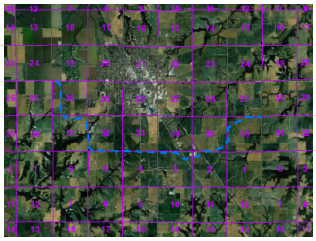

IL Department of Natural Resources Contact
Adam Rawe
217-785-5500
Division of Ecosystems & Environment

Government Jurisdiction
IL Environmental Protection Agency
n/a
1021 North Grand Ave. E.
P.O. Box 19276
Springfield , Illinois 62794 -9276

Disclaimer

The Illinois Natural Heritage Database cannot provide a conclusive statement on the presence, absence, or condition of natural resources in Illinois. This review reflects the information existing in the Database at the time of this inquiry, and should not be regarded as a final statement on the site being considered, nor should it be a substitute for detailed site surveys or field surveys required for environmental assessments. If additional protected resources are encountered during the project's implementation, compliance with applicable statutes and regulations is required.

Terms of Use

By using this website, you acknowledge that you have read and agree to these terms. These terms may be revised by IDNR as necessary. If you continue to use the EcoCAT application after we post changes to these terms, it will mean that you accept such changes. If at any time you do not accept the Terms of Use, you may not continue to use the website.

1. The IDNR EcoCAT website was developed so that units of local government, state agencies and the public could request information or begin natural resource consultations on-line for the Illinois Endangered Species Protection Act, Illinois Natural Areas Preservation Act, and Illinois Interagency Wetland Policy Act. EcoCAT uses databases, Geographic Information System mapping, and a set of programmed decision rules to determine if proposed actions are in the vicinity of protected natural resources. By indicating your agreement to the Terms of Use for this application, you warrant that you will not use this web site for any other purpose.

2. Unauthorized attempts to upload, download, or change information on this website are strictly prohibited and may be punishable under the Computer Fraud and Abuse Act of 1986 and/or the National Information Infrastructure Protection Act.

3. IDNR reserves the right to enhance, modify, alter, or suspend the website at any time without notice, or to terminate or restrict access.

Security

EcoCAT operates on a state of Illinois computer system. We may use software to monitor traffic and to identify unauthorized attempts to upload, download, or change information, to cause harm or otherwise to damage this site. Unauthorized attempts to upload, download, or change information on this server is strictly prohibited by law.

Unauthorized use, tampering with or modification of this system, including supporting hardware or software, may subject the violator to criminal and civil penalties. In the event of unauthorized intrusion, all relevant information regarding possible violation of law may be provided to law enforcement officials.

Privacy

EcoCAT generates a public record subject to disclosure under the Freedom of Information Act. Otherwise, IDNR uses the information submitted to EcoCAT solely for internal tracking purposes.

DEPARTMENT OF THE ARMY
U.S. ARMY CORPS OF ENGINEERS, ST. LOUIS DISTRICT
1222 SPRUCE STREET
ST. LOUIS, MISSOURI 63103

April 22, 2026

Regulatory Division
File Number(s): MVS-2023-540 / MVS-2025-044 / MVS-2024-061

Illinois Alluvial Regional Water Company
c/o Allen Davenport, Board Chairman
1009 State Highway 16
Jerseyville, Illinois 62052

Subject: Nationwide Permit Status - Illinois Alluvial Regional Water Company's (IARWC) proposed Water Distribution System (Phases I – III)

Dear Mr. Davenport:

This letter is in response to permit coordination conducted for IARWC's proposed Water Distribution System by Heneghan and Associates. The proposed central regional water supply project will consist of the installation of approximately 60 miles of 18-, 24-, and 30-inch PVC water main and develop alluvial wells in the Illinois River Bottoms. The three phases of the project, as permitted by the Corps under Nationwide Permit (NWP) 58 – Utility Line Activities for Water and Other Substances pursuant to authorities under Section 404 of the Clean Water Act (33 U.S.C. § 1344) are detailed below.

MVS-2023-540: Phase I consists of 5 wells, a raw water transmission main, an 8-million gallon per day lime softening plant, a 2-million-gallon elevated storage tank, and a finished water main installation between the water plant and Highway 67. The raw water main stretches from Latitude 39.1046°, Longitude -90.513° to the plant site at Latitude 39.1101°, -90.5316°. The finished water main runs from the plant site near the termination of the raw water main east to near Highway 67 at Latitude 39.0849°, Longitude -90.2997°.

MVS-2025-044: Phase II consists of only a portion of the finished water main from near Highway 67 at Latitude 39.0849°, Longitude -90.2997° to its intersection with Illinois Highway 159 at Latitude 39.1005°, Longitude -89.9513°.

MVS-2025-061: Phase III construction consists of a portion of the finished water main from near Highway 159 at Latitude 39.1005°, Longitude -89.9513° to the line's northern termination along Shipman Road at Latitude 39.2594°, Longitude -89.9023°.

The three verifications issued by the Corps expired on March 14, 2026. If you commenced, or were under contract to commence, the activity before the NWP expired, you have 12 months from that date to complete the activity under the present terms and conditions of the NWP issued. If activities are still not completed by March 14, 2027, request for verification of the prior cycle general permit can be submitted to our office for

review under the current set of NWP's that expire on March 15, 2031. The verification would include the portions of the project that were not completed under the original NWP verification that expired on March 14, 2026.

If you have any questions, please contact me at (314) 331-8574 or Kamren.Metzger@usace.army.mil.

Sincerely,

Kamren Metzger
Illinois Project Manager
Regulatory Division

DEPARTMENT OF THE ARMY
U.S. ARMY CORPS OF ENGINEERS, ST. LOUIS DISTRICT
1222 SPRUCE STREET
ST. LOUIS, MISSOURI 63103

April 24, 2024

Regulatory Branch
File Number: MVS-2023-540

Illinois Alluvial Regional Water Company
c/o Allen Davenport, Board Chairman
1009 State Highway 16
Jerseyville, Illinois 62052

Dear Mr. Davenport:

We have reviewed the permit application submitted on your behalf by Heneghan and Associates, P.C. regarding Illinois Alluvial Regional Water Company's (IARWC) proposed Phase I Water Distribution System, which is part of the plans to construct a central regional water supply in Jersey and Macoupin Counties. The overall central regional water supply project will consist of the installation of approximately 60 miles of 18-, 24-, and 30-inch PVC water main and develop alluvial wells in the Illinois River Bottoms. Phase I consists of 5 wells, a raw water transmission main, an 8-million gallon per day lime softening plant, a 2-million-gallon elevated storage tank, and a finished water main installation between the water plant and Highway 67. The raw water main stretches from Latitude 39.1046°, Longitude -90.513° to the plant site at Latitude 39.1101°, -90.5316°. The finished water main runs from the plant site near the termination of the raw water main east to near Highway 67 at Latitude 39.0849°, Longitude -90.2997°. Two (2) tributaries to the Illinois River will be directionally bored along the length of the raw water main leading up to the plant site. The finished water line will cross fifteen (15) tributaries to Macoupin Creek and Otter Creek, respectively, via open-cut construction methodology along the Phase I alignment. Each open-trench crossing is anticipated to be 5-foot in width. Following installation of the finished water main, the limits of disturbance will be restored to pre-project conditions.

The Corps of Engineers has determined that these activities are authorized under Section 404 of the Clean Water Act by an existing Department of the Army nationwide permit for *Utility Line Activities for Water and Other Substances,* as described in the January 13, 2021, and December 27, 2021, Federal Register(s), Reissuance and Modification of Nationwide Permits; Notice (86 FR 73574), Appendix A (B)(58). This verification is valid until March 14, 2026, unless the District Engineer modifies, suspends, or revokes the nationwide permit authorization in accordance with 33 CFR 330.5(d). If you commence, or are under contract to commence, this activity before the Nationwide Permit expires, you will have 12 months from that date to complete the activity under the present terms and conditions of this NWP. **Enclosed is a copy of the nationwide permit and conditions and management practices with which you must comply. The District Engineer has further conditioned this permit to include the following special conditions:**

1. The Federally Endangered Indiana Bat (*Myotis sodalis*) and the threatened Northern Long-eared Bat (*Myotis septentrionalis*) are found in forested areas and stream corridors. The removal of any trees shall be avoided to the maximum extent practical to complete the project. To "not adversely affect" these listed species, you must not cut or clear trees three (3) inches or greater in diameter at breast height during the bats' active season, April 1 – September 30.

In accordance with General Condition number 30 of the Nationwide Permit, a compliance certification (Attachment A of this package) must be completed within 30 days of project completion, or the permit issuance may be revoked and considered null and void.

The Illinois Environmental Protection Agency Division of Water Pollution Control (IEPA/WPC) has conditionally issued general Section 401 Water Quality Certification for this nationwide permit, subject to the general and special conditions (see enclosure). These conditions are part of the Corps permit. If you have any questions regarding the water quality certification conditions, you may contact Darin LeCrone, with IEPA, at 217-782-0610.

This determination is applicable only to the permit program administered by the Corps of Engineers. It does not eliminate the need to obtain other federal, state or local approvals before beginning work. This permit verification does not convey property rights, nor authorize any injury to property or invasion of other rights. You are reminded that the permit is based on submitted plans. Variations from these plans shall constitute a violation of Federal law and may result in the revocation of the permit. If this nationwide permit is modified, reissued, or revoked during this period, the provisions described at 33 CFR 330.6(b) will apply.

If you have any questions, please contact me at (314) 331-8574 or Kamren.Metzger@usace.army.mil. Please refer to file number **MVS-2023-540**. The St. Louis District Regulatory Branch is committed to providing quality and timely service to our customers. To improve customer service, please take a moment to go to our Customer Service Survey found on our website at https://regulatory.ops.usace.army.mil/customer-service-survey/.

Sincerely,

Kamren Metzger
Illinois Project Manager
Regulatory Branch

Enclosures
Nationwide Permit 58 Conditions
Illinois 401 Water Quality Certification
Illinois Regional General Conditions

ATTACHMENT A

COMPLETED WORK CERTIFICATION

Date of Issuance: April 24, 2024

File Number: MVS-2023-540

Name of Permittee: Illinois Alluvial Regional Water Company
c/o Allen Davenport, Board Chairman
1009 State Highway 16
Jerseyville, Illinois 62052

Project Name: IARWC Phase I Water Distribution System

Project Location: Latitude 39.1046°, Longitude -90.513° to
Latitude 39.0849°, Longitude -90.2997°

River Basin/County/State: Illinois / Jersey and Macoupin / Illinois

Project Manager: K. Metzger

Upon completion of this activity authorized by this permit and any mitigation required by the permit, sign this certification, and return it to the following address or via email to MVS-Regulatory@usace.army.mil:

U.S. Army Corps of Engineers
Attn: Regulatory Branch
1222 Spruce Street
St. Louis, Missouri 63103-2833

(Please note that your permitted activity is subject to a compliance inspection by a U.S. Army Corps of Engineers representative. If you fail to comply with this permit, you are subject to permit suspension, modification, or revocation.)

I hereby certify that the work authorized by the above referenced permit has been completed in accordance with the terms and conditions of the said permit, and required mitigation was completed in accordance with the permit conditions.

_____ _____
Signature of Permittee Date

Intentionally Blank

2021 Nationwide Permit Summary

U.S Army Corps
Of Engineers

Issued: March 15, 2021 **Expires: March 14, 2026**

No. 58. Utility Line Activities for Water and Other Substances.

(NWP Final Notice, 86 FR, 2866)

Activities required for the construction, maintenance, repair, and removal of utility lines for water and other substances, excluding oil, natural gas, products derived from oil or natural gas, and electricity. Oil or natural gas pipeline activities or electric utility line and telecommunications activities may be authorized by NWPs 12 or 57, respectively. This NWP also authorizes associated utility line facilities in waters of the United States, provided the activity does not result in the loss of greater than 1/2-acre of waters of the United States for each single and complete project.

Utility lines: This NWP authorizes discharges of dredged or fill material into waters of the United States and structures or work in navigable waters for crossings of those waters associated with the construction, maintenance, or repair of utility lines for water and other substances, including outfall and intake structures. There must be no change in pre-construction contours of waters of the United States. A "utility line" is defined as any pipe or pipeline for the transportation of any gaseous, liquid, liquescent, or slurry substance, for any purpose that is not oil, natural gas, or petrochemicals. Examples of activities authorized by this NWP include utility lines that convey water, sewage, stormwater, wastewater, brine, irrigation water, and industrial products that are not petrochemicals. The term "utility line" does not include activities that drain a water of the United States, such as drainage tile or french drains, but it does apply to pipes conveying drainage from another area.

Material resulting from trench excavation may be temporarily sidecast into waters of the United States for no more than three months, provided the material is not placed in such a manner that it is dispersed by currents or other forces. The district engineer may extend the period of temporary side casting for no more than a total of 180 days, where appropriate. In wetlands, the top 6 to 12 inches of the trench should normally be backfilled with topsoil from the trench. The trench cannot be constructed or backfilled in such a manner as to drain waters of the United States (e.g., backfilling with extensive gravel layers, creating a french drain effect). Any exposed slopes and stream banks must be stabilized immediately upon completion of the utility line crossing of each waterbody.

Utility line substations: This NWP authorizes the construction, maintenance, or expansion of substation facilities associated with a utility line in non-tidal waters of the United States, provided the activity, in combination with all other activities included in one single and complete project, does not result in the loss of greater than 1/2-acre of waters of the United States. This NWP does not authorize discharges of dredged or fill material into non-tidal wetlands adjacent to tidal waters of the United States to construct, maintain, or expand substation facilities.

Foundations for above-ground utility lines: This NWP authorizes the construction or maintenance of foundations for above-ground utility lines in all waters of the United States, provided the foundations are the minimum size necessary.

Access roads: This NWP authorizes the construction of access roads for the construction and maintenance of utility lines, including utility line substations, in non-tidal waters of the United States, provided the activity, in combination with all other activities included in one single and complete project, does not cause the loss of greater than 1/2-acre of non-tidal waters of the United States. This NWP does not authorize discharges of dredged or fill material into non-tidal wetlands adjacent to tidal waters for access roads. Access roads must be the minimum width necessary (see Note 2, below). Access roads must be constructed so that the length of the road minimizes any adverse effects on waters of the United States and must be as near as possible to pre-construction contours and elevations (e.g., at grade corduroy roads or geotextile/gravel roads). Access roads constructed above pre-construction contours and elevations in waters of the United States must be properly bridged or culverted to maintain surface flows.

This NWP may authorize utility lines in or affecting navigable waters of the United States even if there is no associated discharge of dredged or fill material (see 33 CFR part 322). Overhead utility lines constructed over section 10 waters and utility lines that are routed in or under section 10 waters without a discharge of dredged or fill material require a section 10 permit.

This NWP authorizes, to the extent that Department of the Army authorization is required, temporary structures, fills, and work necessary for the remediation of inadvertent returns of drilling fluids to waters of the United States through sub-soil fissures or fractures that might occur during horizontal directional drilling activities conducted for the purpose of installing or replacing utility lines. These remediation activities must be done as soon as practicable, to restore the affected waterbody. District engineers may add special conditions to this NWP to require a remediation plan for addressing inadvertent returns of drilling fluids to waters of the United States during horizontal directional drilling activities conducted for the purpose of installing or replacing utility lines.

This NWP also authorizes temporary structures, fills, and work, including the use of temporary mats, necessary to conduct the utility line activity. Appropriate measures must be taken to maintain normal downstream flows and minimize flooding to the maximum extent practicable, when temporary structures, work, and discharges of dredged or fill material, including cofferdams, are necessary for construction activities, access fills, or dewatering of construction sites. Temporary fills must consist of materials, and be placed in a manner, that will not be eroded by expected high flows. After construction, temporary fills must be removed in their entirety and the affected areas returned to pre-construction elevations. The areas affected by temporary fills must be revegetated, as appropriate.

Notification: The permittee must submit a pre-construction notification to the district engineer prior to commencing the activity if: (1) A section 10 permit is required; or (2) the discharge will result in the loss of greater than 1/10-acre of waters of the United States. (See general condition 32.) (Authorities: Sections 10 and 404)

Note 1: Where the utility line is constructed, installed, or maintained in navigable waters of the United States (i.e., section 10 waters) within the coastal United States, the Great Lakes, and United States territories, a copy of the NWP verification will be sent by the Corps to the National Oceanic and Atmospheric Administration (NOAA), National Ocean Service (NOS), for charting the utility line to protect navigation.

Note 2: For utility line activities crossing a single waterbody more than one time at separate and distant locations, or multiple waterbodies at separate and distant locations, each crossing is considered a single and complete project for purposes of NWP authorization. Utility line activities must comply with 33 CFR 330.6(d).

Note 3: Access roads used for both construction and maintenance may be authorized, provided they meet the terms and conditions of this NWP. Access roads used solely for construction of the utility line must be removed upon completion of the work, in accordance with the requirements for temporary fills.

Note 4: Pipes or pipelines used to transport gaseous, liquid, liquescent, or slurry substances over navigable waters of the United States are considered to be bridges, not utility lines, and may require a permit from the U.S. Coast Guard pursuant to the General Bridge Act of 1946. However, any discharges of dredged or fill material into waters of the United States associated with such pipelines will require a section 404 permit (see NWP 15).

Note 5: This NWP authorizes utility line maintenance and repair activities that do not qualify for the Clean Water Act section 404(f) exemption for maintenance of currently serviceable fills or fill structures.

Note 6: For activities that require pre-construction notification, the PCN must include any other NWP(s), regional general permit(s), or individual permit(s) used or intended to be used to authorize any part of the proposed project or any related activity, including other separate and distant crossings that require Department of the Army authorization but do not require pre-construction notification (see paragraph (b)(4) of general condition 32). The district engineer will evaluate the PCN in accordance with Section D, "District Engineer's Decision." The district engineer may require mitigation to ensure that the authorized activity results in no more than minimal individual and cumulative adverse environmental effects (see general condition 23).

C. Nationwide Permit General Conditions

Note: To qualify for NWP authorization, the prospective permittee must comply with the following general conditions, as applicable, in addition to any regional or case-specific conditions imposed by the division engineer or district engineer. Prospective permittees should contact the appropriate Corps district office to determine if regional conditions have been imposed on an NWP. Prospective permittees should also contact the appropriate Corps district office to determine the status of Clean Water Act Section 401 water quality certification and/or Coastal Zone Management Act consistency for an NWP. Every person who may wish to obtain permit authorization under one or more NWPs, or who is currently relying on an existing or prior permit authorization under one or more NWPs, has been and is on notice that all of the provisions of 33 CFR 330.1 through 330.6 apply to every NWP authorization. Note especially 33 CFR 330.5 relating to the modification, suspension, or revocation of any NWP authorization.

1. Navigation. (a) No activity may cause more than a minimal adverse effect on navigation.

(b) Any safety lights and signals prescribed by the U.S. Coast Guard, through regulations or otherwise, must be installed and maintained at the permittee's expense on authorized facilities in navigable waters of the United States.

(c) The permittee understands and agrees that, if future operations by the United States require the removal, relocation, or other alteration, of the structure or work herein authorized, or if, in the opinion of the Secretary of the Army or his or her authorized representative, said structure or work shall cause unreasonable obstruction to the free navigation of the navigable waters, the permittee will be required, upon due notice from the Corps of Engineers, to remove, relocate, or alter the structural work or obstructions caused thereby, without expense to the United States. No claim shall be made against the United States on account of any such removal or alteration.

2. Aquatic Life Movements. No activity may substantially disrupt the necessary life cycle movements of those species of aquatic life indigenous to the waterbody, including those species that normally migrate through the area, unless the activity's primary purpose is to impound water. All permanent and temporary crossings of waterbodies shall be suitably culverted, bridged, or otherwise designed and constructed to maintain low flows to sustain the movement of those aquatic species. If a bottomless culvert cannot be used, then the crossing should be designed and constructed to minimize adverse effects to aquatic life movements.

3. Spawning Areas. Activities in spawning areas during spawning seasons must be avoided to the maximum extent practicable. Activities that result in the physical destruction (e.g., through excavation, fill, or downstream smothering by substantial turbidity) of an important spawning area are not authorized.

4. Migratory Bird Breeding Areas. Activities in waters of the United States that serve as breeding areas for migratory birds must be avoided to the maximum extent practicable.

5. Shellfish Beds. No activity may occur in areas of concentrated shellfish populations, unless the activity is directly related to a shellfish harvesting activity authorized by NWPs 4 and 48, or is a shellfish seeding or habitat restoration activity authorized by NWP 27.

6. Suitable Material. No activity may use unsuitable material (e.g., trash, debris, car bodies, asphalt, etc.). Material used for construction or discharged must be free from toxic pollutants in toxic amounts (see section 307 of the Clean Water Act).

7. Water Supply Intakes. No activity may occur in the proximity of a public water supply intake, except where the activity is for the repair or improvement of public water supply intake structures or adjacent bank stabilization.

8. Adverse Effects From Impoundments. If the activity creates an impoundment of water, adverse effects to the aquatic system due to accelerating the passage of water, and/or restricting its flow must be minimized to the maximum extent practicable.

9. Management of Water Flows. To the maximum extent practicable, the pre-construction course, condition, capacity, and location of open waters must be maintained for each activity, including stream channelization, storm water management activities, and temporary and permanent road crossings, except as provided below. The activity must be constructed to withstand expected high flows. The activity must not restrict or impede the passage of normal or high flows, unless the primary purpose of the activity is to impound water or manage high flows. The activity may alter the pre-construction course, condition, capacity, and location of open waters if it benefits the aquatic environment

(e.g., stream restoration or relocation activities).

10. Fills Within 100-Year Floodplains. The activity must comply with applicable FEMA-approved state or local floodplain management requirements.

11. Equipment. Heavy equipment working in wetlands or mudflats must be placed on mats, or other measures must be taken to minimize soil disturbance.

12. Soil Erosion and Sediment Controls. Appropriate soil erosion and sediment controls must be used and maintained in effective operating condition during construction, and all exposed soil and other fills, as well as any work below the ordinary high water mark or high tide line, must be permanently stabilized at the earliest practicable date. Permittees are encouraged to perform work within waters of the United States during periods of low-flow or no-flow, or during low tides.

13. Removal of Temporary Structures and Fills. Temporary structures must be removed, to the maximum extent practicable, after their use has been discontinued. Temporary fills must be removed in their entirety and the affected areas returned to pre-construction elevations. The affected areas must be revegetated, as appropriate.

14. Proper Maintenance. Any authorized structure or fill shall be properly maintained, including maintenance to ensure public safety and compliance with applicable NWP general conditions, as well as any activity-specific conditions added by the district engineer to an NWP authorization.

15. Single and Complete Project. The activity must be a single and complete project. The same NWP cannot be used more than once for the same single and complete project.

16. Wild and Scenic Rivers. (a) No NWP activity may occur in a component of the National Wild and Scenic River System, or in a river officially designated by Congress as a "study river" for possible inclusion in the system while the river is in an official study status, unless the appropriate Federal agency with direct management responsibility for such river, has determined in writing that the proposed activity will not adversely affect the Wild and Scenic River designation or study status.

(b) If a proposed NWP activity will occur in a component of the National Wild and Scenic River System, or in a river officially designated by Congress as a "study river" for possible inclusion in the system while the river is in an official study status, the permittee must submit a pre-construction notification (see general condition 32). The district engineer will coordinate the PCN with the Federal agency with direct management responsibility for that river. Permittees shall not begin the NWP activity until notified by the district engineer that the Federal agency with direct management responsibility for that river has determined in writing that the proposed NWP activity will not adversely affect the Wild and Scenic River designation or study status.

(c) Information on Wild and Scenic Rivers may be obtained from the appropriate Federal land management agency responsible for the designated Wild and Scenic River or study river (e.g., National Park Service, U.S. Forest Service, Bureau of Land Management, U.S. Fish and Wildlife Service). Information on these rivers is also available at: http://www.rivers.gov/.

17. Tribal Rights. No activity or its operation may impair reserved tribal rights, including, but not limited to, reserved water rights and treaty fishing and hunting rights.

18. Endangered Species. (a) No activity is authorized under any NWP which is likely to directly or indirectly jeopardize the continued existence of a threatened or endangered species or a species proposed for such designation, as identified under the Federal Endangered Species Act (ESA), or which will directly or indirectly destroy or adversely modify designated critical habitat or critical habitat proposed for such designation. No activity is authorized under any NWP which "may affect" a listed species or critical habitat, unless ESA section 7 consultation addressing the consequences of the proposed activity on listed species or critical habitat has been completed. See 50 CFR 402.02 for the definition of "effects of the action" for the purposes of ESA section 7 consultation, as well as 50 CFR 402.17, which provides further explanation under ESA section 7 regarding "activities that are reasonably certain to occur" and "consequences caused by the proposed action."

(b) Federal agencies should follow their own procedures for complying with the requirements of the ESA (see 33 CFR 330.4(f)(1)). If pre-construction notification is required for the proposed activity, the Federal permittee must provide the district engineer with the appropriate documentation to demonstrate compliance with those requirements. The district engineer will

verify that the appropriate documentation has been submitted. If the appropriate documentation has not been submitted, additional ESA section 7 consultation may be necessary for the activity and the respective federal agency would be responsible for fulfilling its obligation under section 7 of the ESA.

(c) Non-federal permittees must submit a pre-construction notification to the district engineer if any listed species (or species proposed for listing) or designated critical habitat (or critical habitat proposed such designation) might be affected or is in the vicinity of the activity, or if the activity is located in designated critical habitat or critical habitat proposed for such designation, and shall not begin work on the activity until notified by the district engineer that the requirements of the ESA have been satisfied and that the activity is authorized. For activities that might affect Federally-listed endangered or threatened species (or species proposed for listing) or designated critical habitat (or critical habitat proposed for such designation), the pre-construction notification must include the name(s) of the endangered or threatened species (or species proposed for listing) that might be affected by the proposed activity or that utilize the designated critical habitat (or critical habitat proposed for such designation) that might be affected by the proposed activity. The district engineer will determine whether the proposed activity "may affect" or will have "no effect" to listed species and designated critical habitat and will notify the non-Federal applicant of the Corps' determination within 45 days of receipt of a complete pre-construction notification. For activities where the non-Federal applicant has identified listed species (or species proposed for listing) or designated critical habitat (or critical habitat proposed for such designation) that might be affected or is in the vicinity of the activity, and has so notified the Corps, the applicant shall not begin work until the Corps has provided notification that the proposed activity will have "no effect" on listed species (or species proposed for listing or designated critical habitat (or critical habitat proposed for such designation), or until ESA section 7 consultation or conference has been completed. If the non-Federal applicant has not heard back from the Corps within 45 days, the applicant must still wait for notification from the Corps.

(d) As a result of formal or informal consultation or conference with the FWS or NMFS the district engineer may add species-specific permit conditions to the NWPs.

(e) Authorization of an activity by an NWP does not authorize the "take" of a threatened or endangered species as defined under the ESA. In the absence of separate authorization (e.g., an ESA Section 10 Permit, a Biological Opinion with "incidental take" provisions, etc.) from the FWS or the NMFS, the Endangered Species Act prohibits any person subject to the jurisdiction of the United States to take a listed species, where "take" means to harass, harm, pursue, hunt, shoot, wound, kill, trap, capture, or collect, or to attempt to engage in any such conduct. The word "harm" in the definition of "take" means an act which actually kills or injures wildlife. Such an act may include significant habitat modification or degradation where it actually kills or injures wildlife by significantly impairing essential behavioral patterns, including breeding, feeding or sheltering.

(f) If the non-federal permittee has a valid ESA section 10(a)(1)(B) incidental take permit with an approved Habitat Conservation Plan for a project or a group of projects that includes the proposed NWP activity, the non-federal applicant should provide a copy of that ESA section 10(a)(1)(B) permit with the PCN required by paragraph (c) of this general condition. The district engineer will coordinate with the agency that issued the ESA section 10(a)(1)(B) permit to determine whether the proposed NWP activity and the associated incidental take were considered in the internal ESA section 7 consultation conducted for the ESA section 10(a)(1)(B) permit. If that coordination results in concurrence from the agency that the proposed NWP activity and the associated incidental take were considered in the internal ESA section 7 consultation for the ESA section 10(a)(1)(B) permit, the district engineer does not need to conduct a separate ESA section 7 consultation for the proposed NWP activity. The district engineer will notify the non-federal applicant within 45 days of receipt of a complete pre-construction notification whether the ESA section 10(a)(1)(B) permit covers the proposed NWP activity or whether additional ESA section 7 consultation is required.

(g) Information on the location of threatened and endangered species and their critical habitat can be obtained directly from the offices of the FWS and NMFS or their world wide web pages at http://www.fws.gov/ or http://www.fws.gov/ipac and http://www.nmfs.noaa.gov/pr/species/esa/ respectively.

19. Migratory Birds and Bald and Golden Eagles. The permittee is responsible for ensuring that an action authorized by an NWP complies with the Migratory Bird Treaty Act and the Bald and Golden Eagle Protection Act. The permittee is responsible for contacting the appropriate local office of the U.S. Fish and Wildlife Service to determine what measures, if any, are necessary or appropriate to reduce adverse effects to migratory birds or eagles, including whether "incidental take" permits are necessary and available under the Migratory Bird Treaty Act or Bald and Golden Eagle Protection Act for a particular activity.

20. Historic Properties. (a) No activity is authorized under any NWP which may have the potential to cause effects to properties listed, or eligible for listing, in the National Register of Historic Places until the requirements of Section 106 of the National Historic Preservation Act (NHPA) have been satisfied.

(b) Federal permittees should follow their own procedures for complying with the requirements of section 106 of the National Historic Preservation Act (see 33 CFR 330.4(g)(1)). If pre-construction notification is required for the proposed NWP activity, the Federal permittee must provide the district engineer with the appropriate documentation to demonstrate compliance with those requirements. The district engineer will verify that the appropriate documentation has been submitted. If the appropriate documentation is not submitted, then additional consultation under section 106 may be necessary. The respective federal agency is responsible for fulfilling its obligation to comply with section 106.

(c) Non-federal permittees must submit a pre-construction notification to the district engineer if the NWP activity might have the potential to cause effects to any historic properties listed on, determined to be eligible for listing on, or potentially eligible for listing on the National Register of Historic Places, including previously unidentified properties. For such activities, the pre-construction notification must state which historic properties might have the potential to be affected by the proposed NWP activity or include a vicinity map indicating the location of the historic properties or the potential for the presence of historic properties. Assistance regarding information on the location of, or potential for, the presence of historic properties can be sought from the State Historic Preservation Officer, Tribal Historic Preservation Officer, or designated tribal representative, as appropriate, and the National Register of Historic Places (see 33 CFR 330.4(g)). When reviewing pre-construction notifications, district engineers will comply with the current procedures for addressing the requirements of section 106 of the National Historic Preservation Act. The district engineer shall make a reasonable and good faith effort to carry out appropriate identification efforts commensurate with potential impacts, which may include background research, consultation, oral history interviews, sample field investigation, and/or field survey. Based on the information submitted in the PCN and these identification efforts, the district engineer shall determine whether the proposed NWP activity has the potential to cause effects on the historic properties. Section 106 consultation is not required when the district engineer determines that the activity does not have the potential to cause effects on historic properties (see 36 CFR 800.3(a)). Section 106 consultation is required when the district engineer determines that the activity has the potential to cause effects on historic properties. The district engineer will conduct consultation with consulting parties identified under 36 CFR 800.2(c) when he or she makes any of the following effect determinations for the purposes of section 106 of the NHPA: No historic properties affected, no adverse effect, or adverse effect.

(d) Where the non-Federal applicant has identified historic properties on which the proposed NWP activity might have the potential to cause effects and has so notified the Corps, the non-Federal applicant shall not begin the activity until notified by the district engineer either that the activity has no potential to cause effects to historic properties or that NHPA section 106 consultation has been completed. For non-federal permittees, the district engineer will notify the prospective permittee within 45 days of receipt of a complete pre-construction notification whether NHPA section 106 consultation is required. If NHPA section 106 consultation is required, the district engineer will notify the non-Federal applicant that he or she cannot begin the activity until section 106 consultation is completed. If the non-Federal applicant has not heard back from the Corps within 45 days, the applicant must still wait for notification from the Corps.

(e) Prospective permittees should be aware that section 110k of the NHPA (54 U.S.C. 306113) prevents the Corps from granting a permit or other assistance to an applicant who, with intent to avoid the requirements of

section 106 of the NHPA, has intentionally significantly adversely affected a historic property to which the permit would relate, or having legal power to prevent it, allowed such significant adverse effect to occur, unless the Corps, after consultation with the Advisory Council on Historic Preservation (ACHP), determines that circumstances justify granting such assistance despite the adverse effect created or permitted by the applicant. If circumstances justify granting the assistance, the Corps is required to notify the ACHP and provide documentation specifying the circumstances, the degree of damage to the integrity of any historic properties affected, and proposed mitigation. This documentation must include any views obtained from the applicant, SHPO/THPO, appropriate Indian tribes if the undertaking occurs on or affects historic properties on tribal lands or affects properties of interest to those tribes, and other parties known to have a legitimate interest in the impacts to the permitted activity on historic properties.

21. Discovery of Previously Unknown Remains and Artifacts. Permittees that discover any previously unknown historic, cultural or archeological remains and artifacts while accomplishing the activity authorized by an NWP, they must immediately notify the district engineer of what they have found, and to the maximum extent practicable, avoid construction activities that may affect the remains and artifacts until the required coordination has been completed. The district engineer will initiate the Federal, Tribal, and state coordination required to determine if the items or remains warrant a recovery effort or if the site is eligible for listing in the National Register of Historic Places.

22. Designated Critical Resource Waters. Critical resource waters include, NOAA-managed marine sanctuaries and marine monuments, and National Estuarine Research Reserves. The district engineer may designate, after notice and opportunity for public comment, additional waters officially designated by a state as having particular environmental or ecological significance, such as outstanding national resource waters or state natural heritage sites. The district engineer may also designate additional critical resource waters after notice and opportunity for public comment.

(a) Discharges of dredged or fill material into waters of the United States are not authorized by NWPs 7, 12, 14, 16, 17, 21, 29, 31, 35, 39, 40, 42, 43, 44, 49, 50, 51, 52, 57 and 58 for any activity within, or directly affecting, critical resource waters, including wetlands adjacent to such waters.

(b) For NWPs 3, 8, 10, 13, 15, 18, 19, 22, 23, 25, 27, 28, 30, 33, 34, 36, 37, 38, and 54, notification is required in accordance with general condition 32, for any activity proposed by permittees in the designated critical resource waters including wetlands adjacent to those waters. The district engineer may authorize activities under these NWPs only after she or he determines that the impacts to the critical resource waters will be no more than minimal.

23. Mitigation. The district engineer will consider the following factors when determining appropriate and practicable mitigation necessary to ensure that the individual and cumulative adverse environmental effects are no more than minimal:

(a) The activity must be designed and constructed to avoid and minimize adverse effects, both temporary and permanent, to waters of the United States to the maximum extent practicable at the project site (i.e., on site).

(b) Mitigation in all its forms (avoiding, minimizing, rectifying, reducing, or compensating for resource losses) will be required to the extent necessary to ensure that the individual and cumulative adverse environmental effects are no more than minimal.

(c) Compensatory mitigation at a minimum one-for-one ratio will be required for all wetland losses that exceed 1/10-acre and require pre-construction notification, unless the district engineer determines in writing that either some other form of mitigation would be more environmentally appropriate or the adverse environmental effects of the proposed activity are no more than minimal, and provides an activity-specific waiver of this requirement. For wetland losses of 1/10-acre or less that require pre-construction notification, the district engineer may determine on a case-by-case basis that compensatory mitigation is required to ensure that the activity results in only minimal adverse environmental effects.

(d) Compensatory mitigation at a minimum one-for-one ratio will be required for all losses of stream bed that exceed 3/100-acre and require pre-construction notification, unless the district engineer determines in writing that either some other form of mitigation would be more environmentally appropriate or the

adverse environmental effects of the proposed activity are no more than minimal, and provides an activity-specific waiver of this requirement. This compensatory mitigation requirement may be satisfied through the restoration or enhancement of riparian areas next to streams in accordance with paragraph (e) of this general condition. For losses of stream bed of 3/100-acre or less that require pre-construction notification, the district engineer may determine on a case-by-case basis that compensatory mitigation is required to ensure that the activity results in only minimal adverse environmental effects. Compensatory mitigation for losses of streams should be provided, if practicable, through stream rehabilitation, enhancement, or preservation, since streams are difficult-to-replace resources (see 33 CFR 332.3(e)(3)).

(e) Compensatory mitigation plans for NWP activities in or near streams or other open waters will normally include a requirement for the restoration or enhancement, maintenance, and legal protection (e.g., conservation easements) of riparian areas next to open waters. In some cases, the restoration or maintenance/protection of riparian areas may be the only compensatory mitigation required. If restoring riparian areas involves planting vegetation, only native species should be planted. The width of the required riparian area will address documented water quality or aquatic habitat loss concerns. Normally, the riparian area will be 25 to 50 feet wide on each side of the stream, but the district engineer may require slightly wider riparian areas to address documented water quality or habitat loss concerns. If it is not possible to restore or maintain/protect a riparian area on both sides of a stream, or if the waterbody is a lake or coastal waters, then restoring or maintaining/protecting a riparian area along a single bank or shoreline may be sufficient. Where both wetlands and open waters exist on the project site, the district engineer will determine the appropriate compensatory mitigation (e.g., riparian areas and/or wetlands compensation) based on what is best for the aquatic environment on a watershed basis. In cases where riparian areas are determined to be the most appropriate form of minimization or compensatory mitigation, the district engineer may waive or reduce the requirement to provide wetland compensatory mitigation for wetland losses.

(f) Compensatory mitigation projects provided to offset losses of aquatic resources must comply with the applicable provisions of 33 CFR part 332.

(1) The prospective permittee is responsible for proposing an appropriate compensatory mitigation option if compensatory mitigation is necessary to ensure that the activity results in no more than minimal adverse environmental effects. For the NWPs, the preferred mechanism for providing compensatory mitigation is mitigation bank credits or in-lieu fee program credits (see 33 CFR 332.3(b)(2) and (3)). However, if an appropriate number and type of mitigation bank or in-lieu credits are not available at the time the PCN is submitted to the district engineer, the district engineer may approve the use of permittee-responsible mitigation.

(2) The amount of compensatory mitigation required by the district engineer must be sufficient to ensure that the authorized activity results in no more than minimal individual and cumulative adverse environmental effects (see 33 CFR 330.1(e)(3)). (See also 33 CFR 332.3(f).)

(3) Since the likelihood of success is greater and the impacts to potentially valuable uplands are reduced, aquatic resource restoration should be the first compensatory mitigation option considered for permittee-responsible mitigation.

(4) If permittee-responsible mitigation is the proposed option, the prospective permittee is responsible for submitting a mitigation plan. A conceptual or detailed mitigation plan may be used by the district engineer to make the decision on the NWP verification request, but a final mitigation plan that addresses the applicable requirements of 33 CFR 332.4(c)(2) through (14) must be approved by the district engineer before the permittee begins work in waters of the United States, unless the district engineer determines that prior approval of the final mitigation plan is not practicable or not necessary to ensure timely completion of the required compensatory mitigation (see 33 CFR 332.3(k)(3)). If permittee-responsible mitigation is the proposed option, and the proposed compensatory mitigation site is located on land in which another federal agency holds an easement, the district engineer will coordinate with that federal agency to determine if proposed compensatory mitigation project is compatible with the terms of the easement.

(5) If mitigation bank or in-lieu fee program credits are the proposed option, the mitigation plan needs to

address only the baseline conditions at the impact site and the number of credits to be provided (see 33 CFR 332.4(c)(1)(ii)).

(6) Compensatory mitigation requirements (e.g., resource type and amount to be provided as compensatory mitigation, site protection, ecological performance standards, monitoring requirements) may be addressed through conditions added to the NWP authorization, instead of components of a compensatory mitigation plan (see 33 CFR 332.4(c)(1)(ii)).

(g) Compensatory mitigation will not be used to increase the acreage losses allowed by the acreage limits of the NWPs. For example, if an NWP has an acreage limit of 1/2-acre, it cannot be used to authorize any NWP activity resulting in the loss of greater than 1/2-acre of waters of the United States, even if compensatory mitigation is provided that replaces or restores some of the lost waters. However, compensatory mitigation can and should be used, as necessary, to ensure that an NWP activity already meeting the established acreage limits also satisfies the no more than minimal impact requirement for the NWPs.

(h) Permittees may propose the use of mitigation banks, in-lieu fee programs, or permittee-responsible mitigation. When developing a compensatory mitigation proposal, the permittee must consider appropriate and practicable options consistent with the framework at 33 CFR 332.3(b). For activities resulting in the loss of marine or estuarine resources, permittee-responsible mitigation may be environmentally preferable if there are no mitigation banks or in-lieu fee programs in the area that have marine or estuarine credits available for sale or transfer to the permittee. For permittee-responsible mitigation, the special conditions of the NWP verification must clearly indicate the party or parties responsible for the implementation and performance of the compensatory mitigation project, and, if required, its long-term management.

(i) Where certain functions and services of waters of the United States are permanently adversely affected by a regulated activity, such as discharges of dredged or fill material into waters of the United States that will convert a forested or scrub-shrub wetland to a herbaceous wetland in a permanently maintained utility line right-of-way, mitigation may be required to reduce the adverse environmental effects of the activity to the no more than minimal level.

24. Safety of Impoundment Structures. To ensure that all impoundment structures are safely designed, the district engineer may require non-Federal applicants to demonstrate that the structures comply with established state or federal, dam safety criteria or have been designed by qualified persons. The district engineer may also require documentation that the design has been independently reviewed by similarly qualified persons, and appropriate modifications made to ensure safety.

25. Water Quality. (a) Where the certifying authority (state, authorized tribe, or EPA, as appropriate) has not previously certified compliance of an NWP with CWA section 401, a CWA section 401 water quality certification for the proposed discharge must be obtained or waived (see 33 CFR 330.4(c)). If the permittee cannot comply with all of the conditions of a water quality certification previously issued by certifying authority for the issuance of the NWP, then the permittee must obtain a water quality certification or waiver for the proposed discharge in order for the activity to be authorized by an NWP.

(b) If the NWP activity requires pre-construction notification and the certifying authority has not previously certified compliance of an NWP with CWA section 401, the proposed discharge is not authorized by an NWP until water quality certification is obtained or waived. If the certifying authority issues a water quality certification for the proposed discharge, the permittee must submit a copy of the certification to the district engineer. The discharge is not authorized by an NWP until the district engineer has notified the permittee that the water quality certification requirement has been satisfied by the issuance of a water quality certification or a waiver.

(c) The district engineer or certifying authority may require additional water quality management measures to ensure that the authorized activity does not result in more than minimal degradation of water quality.

26. Coastal Zone Management. In coastal states where an NWP has not previously received a state coastal zone management consistency concurrence, an individual state coastal zone management consistency concurrence must be obtained, or a presumption of concurrence must occur (see 33 CFR 330.4(d)). If the permittee cannot comply with all of the conditions of a coastal zone management consistency concurrence previously issued by the

state, then the permittee must obtain an individual coastal zone management consistency concurrence or presumption of concurrence in order for the activity to be authorized by an NWP. The district engineer or a state may require additional measures to ensure that the authorized activity is consistent with state coastal zone management requirements.

27. Regional and Case-By-Case Conditions. The activity must comply with any regional conditions that may have been added by the Division Engineer (see 33 CFR 330.4(e)) and with any case specific conditions added by the Corps or by the state, Indian Tribe, or U.S. EPA in its CWA section 401 Water Quality Certification, or by the state in its Coastal Zone Management Act consistency determination.

28. Use of Multiple Nationwide Permits. The use of more than one NWP for a single and complete project is authorized, subject to the following restrictions:

(a) If only one of the NWPs used to authorize the single and complete project has a specified acreage limit, the acreage loss of waters of the United States cannot exceed the acreage limit of the NWP with the highest specified acreage limit. For example, if a road crossing over tidal waters is constructed under NWP 14, with associated bank stabilization authorized by NWP 13, the maximum acreage loss of waters of the United States for the total project cannot exceed 1/3-acre.

(b) If one or more of the NWPs used to authorize the single and complete project has specified acreage limits, the acreage loss of waters of the United States authorized by those NWPs cannot exceed their respective specified acreage limits. For example, if a commercial development is constructed under NWP 39, and the single and complete project includes the filling of an upland ditch authorized by NWP 46, the maximum acreage loss of waters of the United States for the commercial development under NWP 39 cannot exceed 1/2-acre, and the total acreage loss of waters of United States due to the NWP 39 and 46 activities cannot exceed 1 acre.

29. Transfer of Nationwide Permit Verifications. If the permittee sells the property associated with a nationwide permit verification, the permittee may transfer the nationwide permit verification to the new owner by submitting a letter to the appropriate Corps district office to validate the transfer. A copy of the nationwide permit verification must be attached to the letter, and the letter must contain the following statement and signature:

"When the structures or work authorized by this nationwide permit are still in existence at the time the property is transferred, the terms and conditions of this nationwide permit, including any special conditions, will continue to be binding on the new owner(s) of the property. To validate the transfer of this nationwide permit and the associated liabilities associated with compliance with its terms and conditions, have the transferee sign and date below."

(Transferee)

(Date)

30. Compliance Certification. Each permittee who receives an NWP verification letter from the Corps must provide a signed certification documenting completion of the authorized activity and implementation of any required compensatory mitigation. The success of any required permittee-responsible mitigation, including the achievement of ecological performance standards, will be addressed separately by the district engineer. The Corps will provide the permittee the certification document with the NWP verification letter. The certification document will include:

(a) A statement that the authorized activity was done in accordance with the NWP authorization, including any general, regional, or activity-specific conditions;

(b) A statement that the implementation of any required compensatory mitigation was completed in accordance with the permit conditions. If credits from a mitigation bank or in-lieu fee program are used to satisfy the compensatory mitigation requirements, the certification must include the documentation required by 33 CFR 332.3(l)(3) to confirm that the permittee secured the appropriate number and resource type of credits; and

(c) The signature of the permittee certifying the completion of the activity and mitigation.

The completed certification document must be submitted to the district engineer within 30 days of completion of the authorized activity or the implementation of any required compensatory mitigation, whichever occurs later.

31. Activities Affecting Structures or Works Built by the United States. If an NWP activity also requires review by, or permission from, the Corps pursuant to

33 U.S.C. 408 because it will alter or temporarily or permanently occupy or use a U.S. Army Corps of Engineers (USACE) federally authorized Civil Works project (a "USACE project"), the prospective permittee must submit a pre-construction notification. See paragraph (b)(10) of general condition 32. An activity that requires section 408 permission and/or review is not authorized by an NWP until the appropriate Corps office issues the section 408 permission or completes its review to alter, occupy, or use the USACE project, and the district engineer issues a written NWP verification.

32. Pre-Construction Notification. (a) Timing. Where required by the terms of the NWP, the prospective permittee must notify the district engineer by submitting a pre-construction notification (PCN) as early as possible. The district engineer must determine if the PCN is complete within 30 calendar days of the date of receipt and, if the PCN is determined to be incomplete, notify the prospective permittee within that 30 day period to request the additional information necessary to make the PCN complete. The request must specify the information needed to make the PCN complete. As a general rule, district engineers will request additional information necessary to make the PCN complete only once. However, if the prospective permittee does not provide all of the requested information, then the district engineer will notify the prospective permittee that the PCN is still incomplete and the PCN review process will not commence until all of the requested information has been received by the district engineer. The prospective permittee shall not begin the activity until either:

(1) He or she is notified in writing by the district engineer that the activity may proceed under the NWP with any special conditions imposed by the district or division engineer; or

(2) 45 calendar days have passed from the district engineer's receipt of the complete PCN and the prospective permittee has not received written notice from the district or division engineer. However, if the permittee was required to notify the Corps pursuant to general condition 18 that listed species or critical habitat might be affected or are in the vicinity of the activity, or to notify the Corps pursuant to general condition 20 that the activity might have the potential to cause effects to historic properties, the permittee cannot begin the activity until receiving written notification from the Corps that there is "no effect" on listed species or "no potential to cause effects" on historic properties, or that any consultation required under Section 7 of the Endangered Species Act (see 33 CFR 330.4(f)) and/or section 106 of the National Historic Preservation Act (see 33 CFR 330.4(g)) has been completed. If the proposed activity requires a written waiver to exceed specified limits of an NWP, the permittee may not begin the activity until the district engineer issues the waiver. If the district or division engineer notifies the permittee in writing that an individual permit is required within 45 calendar days of receipt of a complete PCN, the permittee cannot begin the activity until an individual permit has been obtained. Subsequently, the permittee's right to proceed under the NWP may be modified, suspended, or revoked only in accordance with the procedure set forth in 33 CFR 330.5(d)(2).

(b) Contents of Pre-Construction Notification: The PCN must be in writing and include the following information:

(1) Name, address and telephone numbers of the prospective permittee;

(2) Location of the proposed activity;

(3) Identify the specific NWP or NWP(s) the prospective permittee wants to use to authorize the proposed activity;

(4) (i) A description of the proposed activity; the activity's purpose; direct and indirect adverse environmental effects the activity would cause, including the anticipated amount of loss of wetlands, other special aquatic sites, and other waters expected to result from the NWP activity, in acres, linear feet, or other appropriate unit of measure; a description of any proposed mitigation measures intended to reduce the adverse environmental effects caused by the proposed activity; and any other NWP(s), regional general permit(s), or individual permit(s) used or intended to be used to authorize any part of the proposed project or any related activity, including other separate and distant crossings for linear projects that require Department of the Army authorization but do not require pre-construction notification. The description of the proposed activity and any proposed mitigation measures should be sufficiently detailed to allow the district engineer to determine that the adverse environmental effects of the activity will be no more than minimal and to determine the need for compensatory mitigation or other mitigation measures.

(ii) For linear projects where one or more single and complete crossings require pre-construction notification,

the PCN must include the quantity of anticipated losses of wetlands, other special aquatic sites, and other waters for each single and complete crossing of those wetlands, other special aquatic sites, and other waters (including those single and complete crossings authorized by an NWP but do not require PCNs). This information will be used by the district engineer to evaluate the cumulative adverse environmental effects of the proposed linear project, and does not change those non-PCN NWP activities into NWP PCNs.

(iii) Sketches should be provided when necessary to show that the activity complies with the terms of the NWP. (Sketches usually clarify the activity and when provided results in a quicker decision. Sketches should contain sufficient detail to provide an illustrative description of the proposed activity (e.g., a conceptual plan), but do not need to be detailed engineering plans);

(5) The PCN must include a delineation of wetlands, other special aquatic sites, and other waters, such as lakes and ponds, and perennial and intermittent streams, on the project site. Wetland delineations must be prepared in accordance with the current method required by the Corps. The permittee may ask the Corps to delineate the special aquatic sites and other waters on the project site, but there may be a delay if the Corps does the delineation, especially if the project site is large or contains many wetlands, other special aquatic sites, and other waters. Furthermore, the 45-day period will not start until the delineation has been submitted to or completed by the Corps, as appropriate;

(6) If the proposed activity will result in the loss of greater than 1/10-acre of wetlands or 3/100-acre of stream bed and a PCN is required, the prospective permittee must submit a statement describing how the mitigation requirement will be satisfied, or explaining why the adverse environmental effects are no more than minimal and why compensatory mitigation should not be required. As an alternative, the prospective permittee may submit a conceptual or detailed mitigation plan.

(7) For non-federal permittees, if any listed species (or species proposed for listing) or designated critical habitat (or critical habitat proposed for such designation) might be affected or is in the vicinity of the activity, or if the activity is located in designated critical habitat (or critical habitat proposed for such designation), the PCN must include the name(s) of those endangered or threatened species (or species proposed for listing) that might be affected by the proposed activity or utilize the designated critical habitat (or critical habitat proposed for such designation) that might be affected by the proposed activity. For NWP activities that require pre-construction notification, Federal permittees must provide documentation demonstrating compliance with the Endangered Species Act;

(8) For non-federal permittees, if the NWP activity might have the potential to cause effects to a historic property listed on, determined to be eligible for listing on, or potentially eligible for listing on, the National Register of Historic Places, the PCN must state which historic property might have the potential to be affected by the proposed activity or include a vicinity map indicating the location of the historic property. For NWP activities that require pre-construction notification, Federal permittees must provide documentation demonstrating compliance with section 106 of the National Historic Preservation Act;

(9) For an activity that will occur in a component of the National Wild and Scenic River System, or in a river officially designated by Congress as a "study river" for possible inclusion in the system while the river is in an official study status, the PCN must identify the Wild and Scenic River or the "study river" (see general condition 16); and

(10) For an NWP activity that requires permission from, or review by, the Corps pursuant to 33 U.S.C. 408 because it will alter or temporarily or permanently occupy or use a U.S. Army Corps of Engineers federally authorized civil works project, the pre-construction notification must include a statement confirming that the project proponent has submitted a written request for section 408 permission from, or review by, the Corps office having jurisdiction over that USACE project.

(c) Form of Pre-Construction Notification: The nationwide permit pre-construction notification form (Form ENG 6082) should be used for NWP PCNs. A letter containing the required information may also be used. Applicants may provide electronic files of PCNs and supporting materials if the district engineer has established tools and procedures for electronic submittals.

(d) Agency Coordination: (1) The district engineer will consider any comments from Federal and state agencies concerning the proposed activity's compliance with the terms and conditions of the NWPs and the need

for mitigation to reduce the activity's adverse environmental effects so that they are no more than minimal.

(2) Agency coordination is required for: (i) All NWP activities that require pre-construction notification and result in the loss of greater than 1/2-acre of waters of the United States; (ii) NWP 13 activities in excess of 500 linear feet, fills greater than one cubic yard per running foot, or involve discharges of dredged or fill material into special aquatic sites; and (iii) NWP 54 activities in excess of 500 linear feet, or that extend into the waterbody more than 30 feet from the mean low water line in tidal waters or the ordinary high water mark in the Great Lakes.

(3) When agency coordination is required, the district engineer will immediately provide (e.g., via email, facsimile transmission, overnight mail, or other expeditious manner) a copy of the complete PCN to the appropriate Federal or state offices (FWS, state natural resource or water quality agency, EPA, and, if appropriate, the NMFS). With the exception of NWP 37, these agencies will have 10 calendar days from the date the material is transmitted to notify the district engineer via telephone, facsimile transmission, or email that they intend to provide substantive, site-specific comments. The comments must explain why the agency believes the adverse environmental effects will be more than minimal. If so contacted by an agency, the district engineer will wait an additional 15 calendar days before making a decision on the pre-construction notification. The district engineer will fully consider agency comments received within the specified time frame concerning the proposed activity's compliance with the terms and conditions of the NWPs, including the need for mitigation to ensure that the net adverse environmental effects of the proposed activity are no more than minimal. The district engineer will provide no response to the resource agency, except as provided below. The district engineer will indicate in the administrative record associated with each pre-construction notification that the resource agencies' concerns were considered. For NWP 37, the emergency watershed protection and rehabilitation activity may proceed immediately in cases where there is an unacceptable hazard to life or a significant loss of property or economic hardship will occur. The district engineer will consider any comments received to decide whether the NWP 37 authorization should be modified, suspended, or revoked in accordance with the procedures at 33 CFR 330.5.

(4) In cases of where the prospective permittee is not a Federal agency, the district engineer will provide a response to NMFS within 30 calendar days of receipt of any Essential Fish Habitat conservation recommendations, as required by section 305(b)(4)(B) of the Magnuson-Stevens Fishery Conservation and Management Act.

(5) Applicants are encouraged to provide the Corps with either electronic files or multiple copies of pre-construction notifications to expedite agency coordination.

D. District Engineer's Decision

1. In reviewing the PCN for the proposed activity, the district engineer will determine whether the activity authorized by the NWP will result in more than minimal individual or cumulative adverse environmental effects or may be contrary to the public interest. If a project proponent requests authorization by a specific NWP, the district engineer should issue the NWP verification for that activity if it meets the terms and conditions of that NWP, unless he or she determines, after considering mitigation, that the proposed activity will result in more than minimal individual and cumulative adverse effects on the aquatic environment and other aspects of the public interest and exercises discretionary authority to require an individual permit for the proposed activity. For a linear project, this determination will include an evaluation of the single and complete crossings of waters of the United States that require PCNs to determine whether they individually satisfy the terms and conditions of the NWP(s), as well as the cumulative effects caused by all of the crossings of waters of the United States authorized by an NWP. If an applicant requests a waiver of an applicable limit, as provided for in NWPs 13, 36, or 54, the district engineer will only grant the waiver upon a written determination that the NWP activity will result in only minimal individual and cumulative adverse environmental effects.

2. When making minimal adverse environmental effects determinations the district engineer will consider the direct and indirect effects caused by the NWP activity. He or she will also consider the cumulative adverse environmental effects caused by activities authorized by an NWP and whether those cumulative adverse environmental effects are no more than minimal. The district engineer will also

consider site specific factors, such as the environmental setting in the vicinity of the NWP activity, the type of resource that will be affected by the NWP activity, the functions provided by the aquatic resources that will be affected by the NWP activity, the degree or magnitude to which the aquatic resources perform those functions, the extent that aquatic resource functions will be lost as a result of the NWP activity (e.g., partial or complete loss), the duration of the adverse effects (temporary or permanent), the importance of the aquatic resource functions to the region (e.g., watershed or ecoregion), and mitigation required by the district engineer. If an appropriate functional or condition assessment method is available and practicable to use, that assessment method may be used by the district engineer to assist in the minimal adverse environmental effects determination. The district engineer may add case-specific special conditions to the NWP authorization to address site-specific environmental concerns.

3. If the proposed activity requires a PCN and will result in a loss of greater than 1/10-acre of wetlands or 3/100-acre of stream bed, the prospective permittee should submit a mitigation proposal with the PCN. Applicants may also propose compensatory mitigation for NWP activities with smaller impacts, or for impacts to other types of waters. The district engineer will consider any proposed compensatory mitigation or other mitigation measures the applicant has included in the proposal in determining whether the net adverse environmental effects of the proposed activity are no more than minimal. The compensatory mitigation proposal may be either conceptual or detailed. If the district engineer determines that the activity complies with the terms and conditions of the NWP and that the adverse environmental effects are no more than minimal, after considering mitigation, the district engineer will notify the permittee and include any activity-specific conditions in the NWP verification the district engineer deems necessary. Conditions for compensatory mitigation requirements must comply with the appropriate provisions at 33 CFR 332.3(k). The district engineer must approve the final mitigation plan before the permittee commences work in waters of the United States, unless the district engineer determines that prior approval of the final mitigation plan is not practicable or not necessary to ensure timely completion of the required compensatory mitigation. If the prospective permittee elects to submit a compensatory mitigation plan with the PCN, the district engineer will expeditiously review the proposed compensatory mitigation plan. The district engineer must review the proposed compensatory mitigation plan within 45 calendar days of receiving a complete PCN and determine whether the proposed mitigation would ensure that the NWP activity results in no more than minimal adverse environmental effects. If the net adverse environmental effects of the NWP activity (after consideration of the mitigation proposal) are determined by the district engineer to be no more than minimal, the district engineer will provide a timely written response to the applicant. The response will state that the NWP activity can proceed under the terms and conditions of the NWP, including any activity-specific conditions added to the NWP authorization by the district engineer.

4. If the district engineer determines that the adverse environmental effects of the proposed activity are more than minimal, then the district engineer will notify the applicant either: (a) That the activity does not qualify for authorization under the NWP and instruct the applicant on the procedures to seek authorization under an individual permit; (b) that the activity is authorized under the NWP subject to the applicant's submission of a mitigation plan that would reduce the adverse environmental effects so that they are no more than minimal; or (c) that the activity is authorized under the NWP with specific modifications or conditions. Where the district engineer determines that mitigation is required to ensure no more than minimal adverse environmental effects, the activity will be authorized within the 45-day PCN period (unless additional time is required to comply with general conditions 18, 20, and/or 31), with activity-specific conditions that state the mitigation requirements. The authorization will include the necessary conceptual or detailed mitigation plan or a requirement that the applicant submit a mitigation plan that would reduce the adverse environmental effects so that they are no more than minimal. When compensatory mitigation is required, no work in waters of the United States may occur until the district engineer has approved a specific mitigation plan or has determined that prior approval of a final mitigation plan is not practicable or not necessary to ensure timely completion of the required compensatory mitigation.

E. Further Information

1. District engineers have authority to determine if an activity complies with the terms and conditions of an NWP.

2. NWPs do not obviate the need to obtain other federal, state, or local permits, approvals, or authorizations required by law.

3. NWPs do not grant any property rights or exclusive privileges.

4. NWPs do not authorize any injury to the property or rights of others.

5. NWPs do not authorize interference with any existing or proposed Federal project (see general condition 31).

F. Definitions

Best management practices (BMPs): Policies, practices, procedures, or structures implemented to mitigate the adverse environmental effects on surface water quality resulting from development. BMPs are categorized as structural or non-structural.

Compensatory mitigation: The restoration (re-establishment or rehabilitation), establishment (creation), enhancement, and/or in certain circumstances preservation of aquatic resources for the purposes of offsetting unavoidable adverse impacts which remain after all appropriate and practicable avoidance and minimization has been achieved.

Currently serviceable: Useable as is or with some maintenance, but not so degraded as to essentially require reconstruction.

Direct effects: Effects that are caused by the activity and occur at the same time and place.

Discharge: The term "discharge" means any discharge of dredged or fill material into waters of the United States.

Ecological reference: A model used to plan and design an aquatic habitat and riparian area restoration, enhancement, or establishment activity under NWP 27. An ecological reference may be based on the structure, functions, and dynamics of an aquatic habitat type or a riparian area type that currently exists in the region where the proposed NWP 27 activity is located. Alternatively, an ecological reference may be based on a conceptual model for the aquatic habitat type or riparian area type to be restored, enhanced, or established as a result of the proposed NWP 27 activity. An ecological reference takes into account the range of variation of the aquatic habitat type or riparian area type in the region.

Enhancement: The manipulation of the physical, chemical, or biological characteristics of an aquatic resource to heighten, intensify, or improve a specific aquatic resource function(s). Enhancement results in the gain of selected aquatic resource function(s), but may also lead to a decline in other aquatic resource function(s). Enhancement does not result in a gain in aquatic resource area.

Establishment (creation): The manipulation of the physical, chemical, or biological characteristics present to develop an aquatic resource that did not previously exist at an upland site. Establishment results in a gain in aquatic resource area.

High Tide Line: The line of intersection of the land with the water's surface at the maximum height reached by a rising tide. The high tide line may be determined, in the absence of actual data, by a line of oil or scum along shore objects, a more or less continuous deposit of fine shell or debris on the foreshore or berm, other physical markings or characteristics, vegetation lines, tidal gages, or other suitable means that delineate the general height reached by a rising tide. The line encompasses spring high tides and other high tides that occur with periodic frequency but does not include storm surges in which there is a departure from the normal or predicted reach of the tide due to the piling up of water against a coast by strong winds such as those accompanying a hurricane or other intense storm.

Historic Property: Any prehistoric or historic district, site (including archaeological site), building, structure, or other object included in, or eligible for inclusion in, the National Register of Historic Places maintained by the Secretary of the Interior. This term includes artifacts, records, and remains that are related to and located within such properties. The term includes properties of traditional religious and cultural importance to an Indian tribe or Native Hawaiian organization and that meet the National Register criteria (36 CFR part 60).

Independent utility: A test to determine what constitutes a single and complete non-linear project in the Corps Regulatory Program. A project is considered to have independent utility if it would be constructed absent the construction of other projects in the project area. Portions of a multi-phase project that depend upon other phases of the project do not have independent utility. Phases of a project that would be constructed even if the other phases were not built can be considered as separate single and complete projects with independent utility.

Indirect effects: Effects that are caused by the activity and are later in time or farther removed in distance, but are still reasonably foreseeable.

Loss of waters of the United States: Waters of the United States that are permanently adversely affected by filling, flooding, excavation, or drainage because of the regulated activity. The loss of stream bed includes the acres of stream bed that are permanently adversely affected by filling or excavation because of the regulated activity. Permanent adverse effects include permanent discharges of dredged or fill material that change an aquatic area to dry land, increase the bottom elevation of a waterbody, or change the use of a waterbody. The acreage of loss of waters of the United States is a threshold measurement of the impact to jurisdictional waters or wetlands for determining whether a project may qualify for an NWP; it is not a net threshold that is calculated after considering compensatory mitigation that may be used to offset losses of aquatic functions and services. Waters of the United States temporarily filled, flooded, excavated, or drained, but restored to pre-construction contours and elevations after construction, are not included in the measurement of loss of waters of the United States. Impacts resulting from activities that do not require Department of the Army authorization, such as activities eligible for exemptions under section 404(f) of the Clean Water Act, are not considered when calculating the loss of waters of the United States.

Navigable waters: Waters subject to section 10 of the Rivers and Harbors Act of 1899. These waters are defined at 33 CFR part 329.

Non-tidal wetland: A non-tidal wetland is a wetland that is not subject to the ebb and flow of tidal waters. Non-tidal wetlands contiguous to tidal waters are located landward of the high tide line (i.e., spring high tide line).

Open water: For purposes of the NWPs, an open water is any area that in a year with normal patterns of precipitation has water flowing or standing above ground to the extent that an ordinary high water mark can be determined. Aquatic vegetation within the area of flowing or standing water is either non-emergent, sparse, or absent. Vegetated shallows are considered to be open waters. Examples of "open waters" include rivers, streams, lakes, and ponds.

Ordinary High Water Mark: The term ordinary high water mark means that line on the shore established by the fluctuations of water and indicated by physical characteristics such as a clear, natural line impressed on the bank, shelving, changes in the character of soil, destruction of terrestrial vegetation, the presence of litter and debris, or other appropriate means that consider the characteristics of the surrounding areas.

Perennial stream: A perennial stream has surface water flowing continuously year-round during a typical year.

Practicable: Available and capable of being done after taking into consideration cost, existing technology, and logistics in light of overall project purposes.

Pre-construction notification: A request submitted by the project proponent to the Corps for confirmation that a particular activity is authorized by nationwide permit. The request may be a permit application, letter, or similar document that includes information about the proposed work and its anticipated environmental effects. Pre-construction notification may be required by the terms and conditions of a nationwide permit, or by regional conditions. A pre-construction notification may be voluntarily submitted in cases where pre-construction notification is not required and the project proponent wants confirmation that the activity is authorized by nationwide permit.

Preservation: The removal of a threat to, or preventing the decline of, aquatic resources by an action in or near those aquatic resources. This term includes activities commonly associated with the protection and maintenance of aquatic resources through the implementation of appropriate legal and physical mechanisms. Preservation does not result in a gain of aquatic resource area or functions.

Re-establishment: The manipulation of the physical, chemical, or biological characteristics of a site with the goal of returning natural/historic functions to a former aquatic resource. Re-establishment results in rebuilding a former aquatic resource and results in a gain in aquatic resource area and functions.

Rehabilitation: The manipulation of the physical, chemical, or biological characteristics of a site with the goal of repairing natural/historic functions to a degraded aquatic resource. Rehabilitation results in a gain in aquatic resource function, but does not result in a gain in aquatic resource area.

Restoration: The manipulation of the physical, chemical, or biological characteristics of a site with the goal of

returning natural/historic functions to a former or degraded aquatic resource. For the purpose of tracking net gains in aquatic resource area, restoration is divided into two categories: Re-establishment and rehabilitation.

Riffle and pool complex: Riffle and pool complexes are special aquatic sites under the 404(b)(1) Guidelines. Riffle and pool complexes sometimes characterize steep gradient sections of streams. Such stream sections are recognizable by their hydraulic characteristics. The rapid movement of water over a course substrate in riffles results in a rough flow, a turbulent surface, and high dissolved oxygen levels in the water. Pools are deeper areas associated with riffles. A slower stream velocity, a streaming flow, a smooth surface, and a finer substrate characterize pools.

Riparian areas: Riparian areas are lands next to streams, lakes, and estuarine-marine shorelines. Riparian areas are transitional between terrestrial and aquatic ecosystems, through which surface and subsurface hydrology connects riverine, lacustrine, estuarine, and marine waters with their adjacent wetlands, non-wetland waters, or uplands. Riparian areas provide a variety of ecological functions and services and help improve or maintain local water quality. (See general condition 23.)

Shellfish seeding: The placement of shellfish seed and/or suitable substrate to increase shellfish production. Shellfish seed consists of immature individual shellfish or individual shellfish attached to shells or shell fragments (i.e., spat on shell). Suitable substrate may consist of shellfish shells, shell fragments, or other appropriate materials placed into waters for shellfish habitat.

Single and complete linear project: A linear project is a project constructed for the purpose of getting people, goods, or services from a point of origin to a terminal point, which often involves multiple crossings of one or more waterbodies at separate and distant locations. The term "single and complete project" is defined as that portion of the total linear project proposed or accomplished by one owner/developer or partnership or other association of owners/developers that includes all crossings of a single water of the United States (i.e., a single waterbody) at a specific location. For linear projects crossing a single or multiple waterbodies several times at separate and distant locations, each crossing is considered a single and complete project for purposes of NWP authorization. However, individual channels in a braided stream or river, or individual arms of a large, irregularly shaped wetland or lake, etc., are not separate waterbodies, and crossings of such features cannot be considered separately.

Single and complete non-linear project: For non-linear projects, the term "single and complete project" is defined at 33 CFR 330.2(i) as the total project proposed or accomplished by one owner/developer or partnership or other association of owners/developers. A single and complete non-linear project must have independent utility (see definition of "independent utility"). Single and complete non-linear projects may not be "piecemealed" to avoid the limits in an NWP authorization.

Stormwater management: Stormwater management is the mechanism for controlling stormwater runoff for the purposes of reducing downstream erosion, water quality degradation, and flooding and mitigating the adverse effects of changes in land use on the aquatic environment.

Stormwater management facilities: Stormwater management facilities are those facilities, including but not limited to, stormwater retention and detention ponds and best management practices, which retain water for a period of time to control runoff and/or improve the quality (i.e., by reducing the concentration of nutrients, sediments, hazardous substances and other pollutants) of stormwater runoff.

Stream bed: The substrate of the stream channel between the ordinary high water marks. The substrate may be bedrock or inorganic particles that range in size from clay to boulders. Wetlands contiguous to the stream bed, but outside of the ordinary high water marks, are not considered part of the stream bed.

Stream channelization: The manipulation of a stream's course, condition, capacity, or location that causes more than minimal interruption of normal stream processes. A channelized jurisdictional stream remains a water of the United States.

Structure: An object that is arranged in a definite pattern of organization. Examples of structures include, without limitation, any pier, boat dock, boat ramp, wharf, dolphin, weir, boom, breakwater, bulkhead, revetment, riprap, jetty, artificial island, artificial reef, permanent mooring structure, power transmission line, permanently moored floating vessel, piling, aid to

navigation, or any other manmade obstacle or obstruction.

Tidal wetland: A tidal wetland is a jurisdictional wetland that is inundated by tidal waters. Tidal waters rise and fall in a predictable and measurable rhythm or cycle due to the gravitational pulls of the moon and sun. Tidal waters end where the rise and fall of the water surface can no longer be practically measured in a predictable rhythm due to masking by other waters, wind, or other effects. Tidal wetlands are located channelward of the high tide line.

Tribal lands: Any lands title to which is either: (1) Held in trust by the United States for the benefit of any Indian tribe or individual; or (2) held by any Indian tribe or individual subject to restrictions by the United States against alienation.

Tribal rights: Those rights legally accruing to a tribe or tribes by virtue of inherent sovereign authority, unextinguished aboriginal title, treaty, statute, judicial decisions, executive order or agreement, and that give rise to legally enforceable remedies.

Vegetated shallows: Vegetated shallows are special aquatic sites under the 404(b)(1) Guidelines. They are areas that are permanently inundated and under normal circumstances have rooted aquatic vegetation, such as seagrasses in marine and estuarine systems and a variety of vascular rooted plants in freshwater systems.

Waterbody: For purposes of the NWPs, a waterbody is a "water of the United States." If a wetland is adjacent to a waterbody determined to be a water of the United States, that waterbody and any adjacent wetlands are considered together as a single aquatic unit (see 33 CFR 328.4(c)(2)).

US Army Corps of Engineers ®

Illinois Proposed Regional Conditions 2021 Nationwide Permits

1) For NWP 12, 57, and 58: pre-construction notification is required in accordance with General Condition 32 for the following activities; (a) activities that involve mechanized land clearing in a forested wetland for the utility line right-of-way; (b) utility lines placed within, and parallel to or along a jurisdictional stream bed.

2) For Nationwide Permit 14, all proposed projects that result in the loss of greater than 300 linear feet of streambed located within Waters of the U.S., requires a Pre-Construction Notice in accordance with General Condition No. 32.

3) Any bank stabilization activity involving a method that protrudes from the bank contours, such as jetties, stream barbs, and/or weirs, will require a pre-construction notification in accordance with General Condition 32.

ILLINOIS ENVIRONMENTAL PROTECTION AGENCY
1021 NORTH GRAND AVENUE EAST, P.O. BOX 19276, SPRINGFIELD, ILLINOIS 62794-9276 · (217) 782-3397
JB PRITZKER, GOVERNOR JOHN J. KIM, DIRECTOR

Corrected Copy

October 8, 2021 **Corrected Copy Date:** DEC 21 2021

U.S. Army Corps of Engineers, Rock Island
ATTN: Ms. Samantha Chavez, Regulatory Branch
Post Office Box 2004
Clock Tower Building
Rock Island, IL 61204-2004

Re: Federal Register [Docket Number: COE–2020–0002] Proposal to Reissue and Modify Nationwide Permits, September 15, 2020
CWA §401 Certification/Denial and applicable conditions
Illinois EPA Log no. C-0210-20

Dear Ms. Chavez:

On September 15, 2020 the Corps of Engineers issued the notice of proposed rulemaking concerning their determination to reissue and modify the current Nationwide Permits (NWPs) that are set to expire on March 18, 2022. By letter dated August 19, 2021 your office extended the reasonable period of time to revise the §401 water quality certification to October 13, 2021 for thirty-two (32) NWPs. The Agency has made modifications to the certification conditions issued on December 11, 2020. By this final determination document the Illinois EPA grants §401 water quality certification for NWPs 3, 4, 5, 6, 7, 13, 14, 15, 16, 17, 18, 19, 20, 22, 23, 25, 27, 30, 31, 32, 33, 36, 37, 38, 41, 45, 53, and 54 with the special and/or general conditions specified below. This document also provides the certification conditions for NWPs 12, 29, 39, 40, 42, 43, 51, 52, 57, and 58 and notice of the Agency determination to deny eight (8) of the proposed nationwide permits which are provided below with reasons in accordance with 40 CFR 121.7(e)(2).

CWA §401 certification is hereby granted, subject to General Conditions 1 through 12 below, for the following nationwide permits:

NWP 3 – Maintenance
NWP 4 – Fish and Wildlife Harvesting, Enhancement, and Attraction Device and Activities
NWP 5 – Scientific Measurement Devices
NWP 7 – Outfall Structures and Associated Intake Structures
NWP 18 – Minor Discharges
NWP 19 – Minor Dredging
NWP 20 – Response Operations for Oil or Hazardous Substances
NWP 22 – Removal of Vessels
NWP 25 – Structural Discharges
NWP 30 – Moist Soil Management for Wildlife
NWP 31 – Maintenance of Existing Flood Control Facilities
NWP 33 – Temporary Construction, Access and Dewatering
NWP 36 – Boat Ramps
NWP 41 – Reshaping Existing Drainage Ditches
NWP 45 – Repair of Uplands Damaged by Discrete Events

CWA §401 certification is hereby granted, subject to General Conditions 1 through 12 below and the Special Conditions which are contained in the referenced attachment for the following identified nationwide permits:

NWP 6 – Survey Activities. Refer to Special Conditions for NWP 6 in Attachment.
NWP 12 – Oil or Natural Gas Pipeline Activities. Refer to Special Conditions for NWP 12 in Attachment.
NWP 13 – Bank Stabilization. Refer to Special Conditions for NWP 13 in Attachment.
NWP 14 – Linear Transportation Projects. Refer to Special Conditions for NWP 14 in Attachment.
NWP 15 – U.S. Coast Guard Approved Bridges. Refer to Special Conditions for NWP 15 in Attachment.
NWP 16 – Return Water from Upland Contained Disposal Areas. Refer to Special Conditions for NWP 16 in Attachment.
NWP 17 – Hydropower Projects. Refer to Special Conditions for NWP 17 in Attachment.
NWP 23 – Approved Categorical Exclusions. Refer to Special Conditions for NWP 23 in Attachment.
NWP 27 – Aquatic Habitat Restoration, Establishment, and Enhancement Activities. Refer to Special Conditions for NWP 27 in Attachment.
NWP 29 – Residential Developments. Refer to Special Conditions for NWP 29 in Attachment.
NWP 32 – Completed Enforcement Actions. Refer to Special Conditions for NWP 32 in Attachment.
NWP 37 – Emergency Watershed Protection and Rehabilitation. Refer to Special Conditions for NWP 37 in Attachment.
NWP 38 – Cleanup of Hazardous and Toxic Waste. Refer to Special Conditions for NWP 38 in Attachment.
NWP 39 – Commercial and Institutional Developments. Refer to Special Conditions for NWP 39 in Attachment.
NWP 40 – Agricultural Activities. Refer to Special Conditions for NWP 40 in Attachment.
NWP 42 – Recreational Facilities. Refer to Special Conditions for NWP 42 in Attachment.
NWP 43 – Stormwater Management Facilities. Refer to Special Conditions for NWP 43 in Attachment.
NWP 51 – Land-Based Renewable Energy Generation Facilities. Refer to Special Conditions for NWP 51 in Attachment.
NWP 52 – Water-Based Renewable Energy Generation Pilot Projects. Refer to Special Conditions for NWP 52 in Attachment.
NWP 53 – Removal of Low-Head Dams. Refer to Special Conditions for NWP 53 in Attachment.
NWP 54 – Living Shorelines. Refer to Special Conditions for NWP 54 in Attachment.
NWP 57 – Electric Utility Line and Telecommunications Activities. Refer to Special Conditions for NWP 12 in Attachment.
NWP 58 – Utility Line Activities for Water and Other Substances. Refer to Special Conditions for NWP 12 in Attachment.

CWA §401 certification is hereby denied with reasons provided in accordance with 401 CFR 121.7 for the following NWPs:

NWP 21 – Surface Coal Mining Activities. The Illinois EPA has determined that a case-specific review is warranted for all surface mining activities including carbon extraction because pursuant to 35 Ill. Admin. Code Section 401.102, mining activities are identified as having, when certain refuse materials are used, the capability to cause or threaten to cause a nuisance or render waters harmful or detrimental to public health and to all legitimate uses including but not limited to livestock and wildlife uses. The likelihood that contaminants related to coal extraction, particularly acid producing minerals in mine refuse, would be found within overburden and soil stockpiles and therefore present within fill materials warrant a facility specific antidegradation assessment pursuant to 35 Ill. Admin. Code Section 302.105. Additionally, Illinois' Section 401 implementation rules at 35 Ill. Admin. Code Part 395 regarding material testing exemptions specifically exclude material with known sources of pollution. Therefore, Section 401 certification is denied for this nationwide permit (NWP21).

NWP 34 – Cranberry Production Activities: The Illinois EPA has determined that the area of impact that is allowed by an authorization under this nationwide permit exceeds 1/2 acre. 1/2 acre is determined to be representative of the maximum threshold for minimal degradation of existing uses of aquatic resources. Consequently, any activity authorized under this nationwide permit must be subject to a case-specific antidegradation assessment pursuant to 35 Ill. Admin. Code Section 302.105. Therefore, the Illinois EPA denies 401 certification for NWP 34.

NWP 44 – Mining Activities: The Illinois EPA has determined that a case-specific review is warranted for all surface mining activities because pursuant to 35 Ill. Admin. Code Section 401.102, mining activities are identified as having, when certain refuse materials are used, the capability to cause or threaten to cause a nuisance or render waters harmful or detrimental to public health and to all legitimate uses including but not limited to livestock and wildlife uses. Furthermore, all mining activities are regulated by the Illinois EPA under federal and state statute because of their potential to cause or threaten to cause water pollution. Therefore, for the above reasons, the Illinois EPA denies 401 certification for NWP 44.

NWP 46 – Discharges into Ditches: The Illinois EPA has determined that a case-specific review is warranted for all discharge activities into ditches because of the nationwide permit exceeds the 1/2 acreage determined to be the maximum threshold for minimal degradation of existing uses of aquatic resources. Consequently, any activity authorized under this nationwide permit must be subject to a case-specific antidegradation assessment pursuant to 35 Ill. Admin. Code Section 302.105. Therefore, the Illinois EPA denies 401 certification for NWP 46.

NWP 48 – Commercial Shellfish Mariculture Activities: As proposed, the Illinois EPA believes this nationwide permit is inapplicable to waters of the U.S. that are found within the State of Illinois. Therefore, the Illinois EPA denies 401 certification for NWP 48.

NWP 49 – Coal Remining Activities: By reference to the certification denial explanation for NWP 21, the Illinois EPA denies 401 certification for NWP 49.

NWP 50 – Underground Coal Mining: By reference to the certification denial explanation for NWP 21, the Illinois EPA denies 401 certification for NWP 50.

NWP 59 – Water Reclamation and Reuse Facilities: As proposed in the Federal Register, this proposed nationwide permit would appear to allow utilization of existing natural waterbodies as treatment devices. According to 35 Ill. Admin. Code 301.440 such utilization is not permissible. Therefore, the Illinois EPA denies 401 certification for NWP 59.

401 Certification General Conditions

General Conditions 1 through 12 shall be applicable to all NWPs that are granted 401 certification.

General Condition 1: Waterbodies that Require Individual Certification

Pursuant to 35 Ill. Adm. Code Section 302.105(d)(6), an individual 401 water quality certification will be required for activities permitted under these Nationwide Permits for discharges to waters designated by the State of Illinois as waters of particular biological significance or Outstanding Resource Waters under 35 Ill. Adm. Code 302.105(b). Biologically Significant Streams (BSS) are cataloged in Illinois DNR's publication

"Integrating Multiple Taxa in a Biological Stream Rating System" and may be identified at: https://www2.illinois.gov/dnr/conservation/BiologicalStreamratings/Pages/default.aspx.

General Condition 2: Water Quality Impairments

Pursuant to 35 Ill. Adm. Code Sections 302.105(a), 302.105(c)(2)(B), and 395.401(a), an individual 401 water quality certification will be required for activities permitted under these Nationwide Permits that may cause a discharge that, whether temporarily or permanently, may cause or contribute to additional loading of any pollutant, or deterioration of any water quality parameter, such as pH or dissolved oxygen, where such pollutant or parameter is also designated by the State of Illinois as a cause of water quality impairment of the particular segment of the receiving water body according to the Illinois Environmental Protection Agency's Section 303(d) list. The most recent Illinois Integrated Water Quality Report and Section 303(d) List can be found at https://www2.illinois.gov/epa/topics/water-quality/watershed-management/tmdls/Pages/303d-list.aspx.

General Condition 3: Threatened and Endangered Species

Pursuant to 35 Ill. Admin. Code Section 302.105(f)(1)(F), prior to proceeding with any work in furtherance of activities permitted under these Nationwide Permits, potential impacts to State threatened or endangered species and Natural Areas shall be determined in accordance with applicable consultation procedures established under 17 Ill. Admin Code Part 1075. The Department of Natural Resources (IDNR) Ecological Compliance Assessment Tool (EcoCAT) is available to complete consultation at http://dnr.illinois.gov/EcoPublic/. If IDNR determines that adverse impacts to protected natural resources are likely, the applicant shall address those identified concerns with IDNR through the consultation process. Please contact IDNR, Impact Assessment Section at 217-785-5500 if you have any questions regarding consultation.

General Condition 4: TMDLs

Pursuant to 35 Ill. Admin. Code Sections 302.105(a), 302.105(c)(2)(B), and 395.401(a), activities permitted under these Nationwide Permits that may cause a discharge that, whether temporarily or permanently, may cause or contribute to additional loading of any pollutant, or deterioration of any water quality parameter, such as pH or dissolved oxygen, where such pollutant or parameter is addressed by a USEPA approved Total Maximum Daily Load (TMDL) report for the receiving water body shall develop and implement additional measures and or procedures which ensure consistency with the load allocations, assumptions and requirements of the TMDL report. TMDL program information and water listings are available at https://www2.illinois.gov/epa/topics/water-quality/watershed-management /tmdls/Pages/reports.aspx.

General Condition 5: Prohibitions

Pursuant to 35 Ill. Admin. Code Section 395.401(a), the applicant shall not cause:

a. violation of applicable provisions of the Illinois Environmental Protection Act;
b. water pollution defined and prohibited by the Illinois Environmental Protection Act;
c. violation of applicable water quality standards of the Illinois Pollution Control Board, Title 35, Subtitle C: Water Pollution Rules and Regulation; or
d. interference with water use practices near public recreation areas or water supply intakes.

General Condition 6: Erosion and Sedimentation Control Measures

Pursuant to the Illinois Environmental Protection Act Section 39(a)[415 ILCS 5/39(a)] and 35 Ill. Admin. Code Sections 302.203 and 395.402(b)(2), the applicant shall implement all necessary sedimentation and erosion control measures consistent with the current edition of

the "Illinois Urban Manual" found at https://illinoisurbanmanual.org/. Interim measures to prevent erosion during construction shall be taken and may include the installation of sedimentation basins, silt fencing and temporary mulching. All construction within the waterway shall be conducted during zero or low flow conditions. All areas affected by construction shall be seeded and stabilized as soon after construction as possible.

General Condition 7: NPDES Stormwater Construction Permit

Pursuant to the Illinois Environmental Protection Act Section 39(a)[415 ILCS 5/39(a)] and 35 Ill. Admin. Code Section 395.402(b)(2), the applicant shall be responsible for obtaining an NPDES Storm Water Permit required by the federal Clean Water Act prior to initiating construction if the construction activity associated with the project will result in the disturbance of 1 (one) or more acres, total land area. An NPDES Storm Water Permit may be applied for at https://www2.illinois.gov/epa/topics/forms/water-permits/storm-water/Pages/construction.aspx.

General Condition 8: Spill Response Plan

Pursuant to 35 Ill. Admin. Code Sections 395.401, 302.203, and 302.208, the applicant shall ensure that a spill avoidance and response plan has been developed and implemented for management of accidental releases of petroleum, oil, and lubricant products to the aquatic environment during construction and for emergency notification of applicable downstream water supply operators. Absorbent pads, containment booms and skimmers shall be available to facilitate the cleanup of petroleum spills. If floating hydrocarbon (oil and gas) products are observed, the applicant or his designated individual will be responsible for directing that work be halted so that appropriate corrective measures are taken in accordance with the plan prior to resuming work.

General Condition 9: Hydraulic Machinery

Pursuant to 35 Ill. Admin. Code Sections 302.203, 302.304, and 302.515, all hydraulic machinery utilized for the permitted activity and used in or immediately adjacent to waters of the State shall utilize biodegradable or bio-based hydraulic fluids to minimize pollution in the case of broken or leaking hydraulic equipment.

General Condition 10: Temporary Structures and Work

Pursuant to 35 Ill. Admin. Code Sections 302.203, 395.204, and 395.401(b), temporary work pads, cofferdams, access roads and other temporary fills are approved provided that such activities are constructed with clean coarse aggregate or non-erodible non-earthen fill material that will not cause siltation. Sandbags, pre-fabricated rigid materials, sheet piling, inflatable bladders and fabric lined basins may be used for temporary facilities. Temporary fills within streams, creeks or rivers shall utilize adequate bypass measures (i.e. dam and pump, flumes, culverts, etc.) to minimize sedimentation and erosion and to maintain normal stream flow during construction.

General Condition 11: Construction Site Dewatering

Pursuant to Illinois Environmental Protection Act Section 39(a)[415 ILCS 5/39(a)] and 35 Ill. Admin. Code Section 395.402(b)(2), dewatering of a construction site is authorized provided the dewatering activity is limited to the immediate work area within a cofferdam or otherwise isolated from waters of the State, and the work site is free from sources of contamination including those of natural origin. Dewatering activities shall incorporate Best Management Practices in accordance with the current edition of the "Illinois Urban Manual"

https://illinoisurbanmanual.org/. Practice Standard for Dewatering (no. 813) or as otherwise appropriate to ensure that return flows from the dewatering activity are free of unnatural turbidity and floating debris and meet applicable water quality standards. Dewatering or discharge of flush water from construction of drilled piers or boreholes is not authorized and must be conducted in accordance with an NPDES permit issued by the Illinois EPA.

General Condition 12: Discharged Material Quality

Pursuant to 35 Ill. Admin. Code Sections 302.203, 302.208, and 395.401(b), any spoil material excavated, dredged or otherwise produced must not be returned to the water body but must be deposited in a self-contained area in compliance with all state statutes. Except as specifically allowed by special condition, any backfilling must be done with clean material that is predominantly sand or larger size material, with no more than 20% passing a #230 U. S. sieve and placed in a manner to prevent violation of applicable water quality standards.

401 Certification Special Conditions

Special Conditions including the conditional exclusions of 401 certification coverage that are listed within the Attachment: "Special Conditions for Illinois EPA 401 Water Quality Certifications of Certain Nationwide Permits" shall be applicable as stated therein.

Should you have any questions or comments regarding the content of this nationwide certification, please contact Darren Gove at 217-782-3362.

Sincerely,

Darin E. LeCrone, P.E.
Manager, Permit Section
Division of Water Pollution Control

DEL:DRG:C-0210-20.docx

Attachment: Special Conditions for Illinois EPA 401 Water Quality Certifications of Certain Nationwide Permits Regarding Federal Register [Docket Number: COE–2020–0002] Proposal to Reissue and Modify Nationwide Permits dated September 15, 2020

cc: Records Unit
CoE, Chicago District
CoE, Louisville District (Indianapolis Office)
CoE, Louisville District (Newburgh Regulatory Office)
CoE, Memphis District
CoE, St. Louis District
IDNR, Bartlett
IDNR, OWR, Chicago
IDNR, OWR, Springfield
USEPA, Region 5
USFWS, Rock Island, Barrington and Marion

ILLINOIS EPA WATER QUALITY CERTIFICATION SPECIAL CONDITIONS FOR NATIONWIDE PERMIT 6

Survey Activities

1. Pursuant to 35 Ill. Admin. Code Sections 302.105(c)(2)(B)(iii), 302.203, and 395.401(a), the applicant for the applicable nationwide permit shall provide adequate planning and supervision during the project construction period for implementing construction methods, processes and cleanup procedures necessary to prevent water pollution and control erosion.

2. Pursuant to 35 Ill. Admin. Code Section 395.401(a), material resulting from trench excavation within surface waters of the State may be temporarily sidecast adjacent to the trench excavation provided that:
   a. Sidecast material is not placed within a creek, stream, river or other flowing water body such that material dispersion could occur;
   b. Sidecast material is not placed within ponds or other water bodies other than wetlands; and
   c. Sidecast material is not placed within a wetland for a period longer than twenty (20) calendar days. Such sidecast material shall either be removed from the site or used as backfill (refer to Condition 4).

3. Pursuant to 35 Ill. Admin. Code Sections 302.203, 395.205, and 395.401(a), backfill used within trenches passing through surface water of the State, except wetland areas, shall be clean coarse aggregate, gravel or other material which will not cause siltation. Excavated material may be used only if:
   a. Particle size analysis is conducted and demonstrates the material to be at least 80% sand or larger size material, using a #230 U.S. sieve; or
   b. Excavation and backfilling are done under dry conditions.

4. Pursuant to 35 Ill. Admin. Code Sections 302.105(c)(2)(B)(ii) and 395.401(a), backfill used within trenches passing through wetland areas shall consist of clean material which will not cause siltation. Excavated material shall be used to the extent practicable, with the upper six (6) to twelve (12) inches backfilled with the topsoil obtained during trench excavation.

ILLINOIS EPA WATER QUALITY CERTIFICATION SPECIAL CONDITIONS FOR NATIONWIDE PERMITS 12, 57, and 58.

Utility Line Activities, Electric, Water, and Others.

1. Pursuant to 35 Ill. Adm. Code Sections 302.105(c)(2)(B), 302.208, and 395.401, a case-specific (individual) 401 water quality certification from the Illinois EPA will be required for:
   a. activities in the following waters:
      i. Lake Calumet
      ii. Fox River (including the Fox Chain of Lakes)
      iii. Lake Michigan
      iv. Chicago Sanitary and Ship Canal
      v. Calumet-Sag Channel
      vi. Little Calumet River
      vii. Grand Calumet River
      viii. Calumet River
      ix. Pettibone Creek (in Lake County)

x. South Branch of the Chicago River (including the South Fork)
xi. North Branch of the Chicago River (including the East and West Forks and the Skokie Lagoons)
xii. Chicago River (Main Stem)
xiii. Des Plaines River
xiv. Kankakee River

b. activities in the following waters if material is sidecast into waters of the State or wetlands:
   i. Saline River (in Hardin County)
   ii. Richland Creek (in St. Clair and Monroe Counties)
   iii. Rock River (in Winnebago County)
   iv. Illinois River upstream of mile 229.6 (Illinois Route 178 bridge)
   v. Illinois River between mile 140.0 and 182.0
   vi. DuPage River (including the East and West Branches)
   vii. Salt Creek (Des Plaines River Watershed)
   viii. Waukegan River (including the South Branch)

c. activities in waters designated as Public and Food Processing Water Supplies with surface intake facilities within 2000 feet of the proposed discharge unless the discharge is reasonably considered downstream of the intake. The Illinois EPA's Division of Public Water Supply at 217/782-1020 may be contacted for information on these water supplies

2. Section 401 water quality certification is hereby issued for all other waters, with the following conditions:

a. Pursuant to 35 Ill. Admin. Code Sections 395.401(b) and 302.105(c)(2)(B)(iii), the applicant for the applicable nationwide permit(s) shall provide adequate planning and supervision during the project construction period for implementing construction methods, processes and cleanup procedures necessary to prevent water pollution and control erosion.

b. Pursuant to 35 Ill. Admin. Code Sections 302.105(c)(2)(B)(ii), 302.203, 302.208, 395.203, and 395.401, dredged material resulting from trench excavation within surface waters of the State may be temporarily sidecast adjacent to the trench excavation provided that:
   i. Sidecast material is not placed within a creek, stream, river or other flowing water body such that material dispersion could occur;
   ii. Side cast material is not placed within ponds or other water bodies other than wetlands; and
   iii. Sidecast material is not placed within a wetland for a period longer than twenty (20) calendar days. Such sidecast material shall either be removed from the site (refer to Condition 2.e) or used as backfill (refer to Condition 2.d).

c. Pursuant to 35 Ill. Admin. Code Sections 302.105(c)(2)(B)(ii), 302.203, 302.208, 395.203, and 395.401, backfill used within trenches passing through surface water of the State, except wetland areas, shall be clean course aggregate, gravel or other material which will not cause siltation, pipe damage during placement, or chemical corrosion in place. Excavated material may be used only if:
   i. Particle size analysis is conducted and demonstrates the material to be at least 80% sand or larger size material, using a #230 U.S. sieve; or
   ii. Excavation and backfilling are done under dry conditions.

d. Pursuant to 35 Ill. Admin. Code Sections 302.105(c)(2)(B)(ii), 302.203, 302.208, 395.203, and 395.401, backfill used within trenches passing through wetland areas shall consist of clean material which will not cause siltation, pipe damage during placement, or chemical corrosion in place. Excavated material shall be used to the extent practicable, with the upper six (6) to twelve (12) inches backfilled with the topsoil obtained during trench excavation.

e. Pursuant to 35 Ill. Admin. Code Sections 302.105(c)(2)(B)(ii), 302.203, 302.208, 395.203, and 395.401, all material excavated which is not being used as backfill as stipulated in Condition 2.d and 2.c shall be stored or disposed in self-contained areas with no discharge to waters of the State. Material shall be disposed of appropriately under the regulations at 35 Il. Adm. Code Subtitle G.

f. Pursuant to 35 Ill. Admin. Code Sections 395.401(b), 302.203, and 302.208, the use of directional drilling to install utility pipelines below surface waters of the State is hereby certified provided that:
   i. All pits and other construction necessary for the directional drilling process are located outside of surface waters of the State;
   ii. All drilling fluids shall be adequately contained such that they cannot cause a discharge to surface waters of the State. Such fluids shall be treated as stipulated in Condition 2.F; and
   iii. Erosion and sediment control is provided in accordance with Conditions 2.B, 2.G, and 2.H.

g. Pursuant to 35 Ill. Admin. Code Sections 302.105(c)(2)(B)(iii), 302.203, and 395.401(b), permanent access roads shall be constructed of clean coarse aggregate or non-erodible nonearthen fill material that will not cause siltation. Material excavated or dredged from the surface water or wetland shall not be used to construct the access road in waters of the state. The applicant for Nationwide Permit 12 that constructs access roads shall maintain flow in creeks, streams and rivers by installing culverts, bridges or other such techniques.

h. Pursuant to 35 Ill. Admin. Code Sections 395.401(b) and 302.203, adjacent banks and slopes disturbed by construction shall be stabilized immediately following construction. The applicant shall undertake necessary measures and procedures to eliminate stormwater channelization via the utility route during and after construction. Interim measures to prevent erosion during construction shall be taken and may include the installation of sedimentation basins, check dams, straw bales and temporary mulching. All construction within the waterway shall be conducted during zero or low flow conditions.

i. Pursuant to 35 Ill. Admin. Code Sections 395.401(b) and 302.203, asphalt, bituminous material and concrete with protruding material such as reinforcing bar or mesh shall not be 1) used for backfill, 2) placed on shorelines/stream banks, or 3) placed in waters of the State.

ILLINOIS EPA WATER QUALITY CERTIFICATION SPECIAL CONDITIONS FOR NATIONWIDE PERMIT 13
Bank Stabilization

1. Pursuant to 35 Ill. Admin. Code Sections 395.401(a) and 302.105(c)(2)(B), a case-specific (individual) 401 water quality certification from the Illinois EPA will be required for bank stabilization activities that will exceed 1000 linear feet.

2. Pursuant to 35 Ill. Admin. Code Sections 302.203 and 395.401(b), asphalt, bituminous material and concrete with protruding material such as reinforcing bars or mesh shall not be:
   a. used for backfill;
   b. placed on shorelines/streambanks; or
   c. placed in waters of the State.

3. Pursuant to 35 Ill. Admin. Code Sections 302.203, 302.208, and 395.401(b), the applicant shall consider installing bioengineering practices in lieu of structural practices of bank stabilization to minimize impacts to the lake, pond, river or stream and enhance aquatic habitat. The applicant shall document the selection process for the bank stabilization technique(s) and the basis for the selection of the bank stabilization practices. Bioengineering techniques may include, but are not limited to:
   a. adequately sized riprap or A-Jack structures keyed into the toe of the slope with native plantings on the banks above;
   b. vegetated geogrids;
   c. coconut fiber (coir) logs;
   d. live, woody vegetative cuttings, fascines or stumps;
   e. brush layering; and
   f. soil lifts.

ILLINOIS EPA WATER QUALITY CERTIFICATION SPECIAL CONDITIONS FOR NATIONWIDE PERMIT 14
Linear Transportation Projects

1. Pursuant to 35 Ill. Admin. Code Sections 395.401(a), 302.105(a), and 302.105(c)(2)(B), a case-specific (individual) 401 water quality certification from the Illinois EPA will be required for linear transportation activities that cause loss of greater than 500 linear feet of stream channel, as measured along the stream corridor.

2. Pursuant to 35 Ill. Admin. Code Sections 395.401(a), 302.105(a), and 302.105(c)(2)(B), a case-specific (individual) 401 water quality certification from the Illinois EPA will be required for linear transportation activities covered by this nationwide permit that include the temporary or permanent placement of steel or other painted structures within the waterbody as result of demolition work of previous structures.

3. Pursuant to 35 Ill. Admin. Code Sections 395.401(a), 302.105(a), and 302.105(c)(2)(B), a case-specific (individual) 401 water quality certification from the Illinois EPA will be required for new or expanded roadways that affect waterways which are designated by the State of Illinois as having water quality impairments caused by chloride. The most recent Illinois Integrated Water Quality Report and Section 303(d) List can be found at https://www2.illinois.gov/epa/topics/water-quality/watershed-management/tmdls/Pages/303d-list.aspx

4. Pursuant to 35 Ill. Admin. Code Sections 302.203 and 395.401(b), any relocated stream channel authorized under this nationwide permit shall be constructed under dry conditions and allowed to fully stabilize prior to the diversion of flow to prevent erosion and sedimentation.

ILLINOIS EPA WATER QUALITY CERTIFICATION SPECIAL CONDITIONS FOR NATIONWIDE PERMIT 15 U.S. Coast Guard Approved Bridges

1. Pursuant to 35 Ill. Admin. Code Sections 395.401(a), 302.105(a), and 302.105(c)(2)(B), a case-specific (individual) 401 water quality certification from the Illinois EPA shall be required for linear transportation activities covered by this nationwide permit that include the temporary or permanent placement of demolished structural or decking materials within the waterbody as result of demolition work of previous structures.

2. Pursuant to 35 Ill. Admin. Code Sections 395.401(a), 302.105(a), and 302.105(c)(2)(B), a case-specific (individual) 401 water quality certification from the Illinois EPA shall be required for new bridges (not replacing another) that affect waterways which are designated by the State of Illinois as having water quality impairments caused by chloride. The most recent Illinois Integrated Water Quality Report and Section 303(d) List can be found at https://www2.illinois.gov/epa/topics/water-quality/watershed-management/tmdls/Pages/303d-list.aspx.

ILLINOIS EPA WATER QUALITY CERTIFICATION SPECIAL CONDITIONS FOR NATIONWIDE PERMIT 16 Return Water from Upland Contained Disposal Areas

1. Pursuant to 35 Ill. Adm. Code Sections 302.105(c)(2)(B), 302.208, and 395.401, a case-specific (individual) 401 water quality certification from the Illinois EPA will be required for:

    a. return water discharge resulting from dredging activities in the following waters:
        i. Lake Calumet
        ii. Fox River (including the Fox Chain of Lakes)
        iii. Lake Michigan
        iv. Chicago Sanitary and Ship Canal
        v. Calumet-Sag Channel
        vi. Little Calumet River
        vii. Grand Calumet River
        viii. Calumet River
        ix. Pettibone Creek (in Lake County)
        x. South Branch of the Chicago River (including the South Fork)
        xi. North Branch of the Chicago River (including the East and West Forks and the Skokie Lagoons)
        xii. Chicago River (Main Stem)
        xiii. Des Plaines River
        xiv. Kankakee River
        xv. Saline River (in Hardin County)
        xvi. Richland Creek (in St. Clair and Monroe Counties)

xvii. Rock River (in Winnebago County)
xviii. Illinois River upstream of mile 229.6 (Illinois Route 178 bridge)
xix. Illinois River between mile 140.0 and 182.0
xx. DuPage River (including the East and West Branches)
xxi. Salt Creek (Des Plaines River Watershed)
xxii. Waukegan River (including the South Branch)
xxiii. any waters designated as

b. return water discharge, resulting from dredging activities, in waters designated as Public and Food Processing Water Supplies with surface intake facilities within 2000 feet of the proposed discharge unless the discharge is reasonably considered downstream of the intake. The Illinois EPA's Division of Public Water Supply at 217/782-1020 may be contacted for information on these water supplies.

c. disposal areas or return water discharges that are located within a designated Environmental Justice (EJ) area of concern. An EJ mapping tool is available at https://illinois-epa.maps.arcgis.com/apps/webappviewer/index.html?id=f154845da68a4a3f837cd3b880b0233c.

d. dredging activities that would result in upland placement of more than 125,000 cubic yards of material or would produce effluent discharge on a recurring basis for a period lasting more than 5 years, including periods covered under a previous Department of the Army authorization.

e. hydraulic dredging activities if the total quantity of dredged material per dredge event would exceed 500 cubic yards and the receiving water:
   i. is listed on the Agency's 303(d) List, or
   ii. has a USEPA approved Total Maximum Daily Load (TMDL) is in effect, or
   iii. is designated pursuant to Section 302.206(d) Stream Segments for Enhanced Dissolved Oxygen Protection.

   Information on 303(d) List and TMDLs can be found at https://www2.illinois.gov/epa/topics/water-quality/watershed-management/tmdls/Pages/default.aspx and Information on Stream Segments for Enhanced Dissolved Oxygen Protection may be found at https://pcb.illinois.gov/documents/dsweb/Get/Document-33354/. You may also utilize Resource Management Mapping Service to graphically identify impaired waters at https:// www.rmms.illinois.edu/.

2. Section 401 water quality certification is otherwise hereby issued pursuant to the Illinois Environmental Protection Act Section 12(a) [415 ILCS 5/12(a)] and 35 Ill. Admin. Code Section 395.402(b)(2), except that applicants shall apply for and obtain a water pollution control permit for construction and operation of the upland contained disposal area as provided by 35 Ill. Admin. Code Subtitle C Part 309 Subpart B, prior to dredging activities.

ILLINOIS EPA WATER QUALITY CERTIFICATION SPECIAL CONDITIONS FOR NATIONWIDE PERMIT 17
Hydropower Projects

1. Pursuant to 35 Ill. Admin. Code Sections 395.401(b), an individual Section 401 water quality certification will be required for any project that is not previously approved by a Section 401 water quality certification issued by the Illinois EPA for a Federal Energy Regulatory Commission license or permit.

ILLINOIS EPA WATER QUALITY CERTIFICATION SPECIAL CONDITIONS FOR NATIONWIDE PERMIT 23
Approved Categorical Exclusions

1. Pursuant to 35 Ill. Admin. Code Sections 395.401(a), 302.105(a), and 302.105(c)(2)(B), case-specific (individual) 401 water quality certification from the Illinois EPA will be required for activities covered by this nationwide permit that will cause the loss of aquatic resources which exceed the lessor of ½ acres or 300 linear feet of stream channel as measured along the stream corridor.

2. Pursuant to 35 Ill. Admin. Code Sections 395.401(a), 302.105(a), and 302.105(c)(2)(B), case-specific (individual) 401 water quality certification from the Illinois EPA will be required for linear transportation activities covered by this nationwide permit which includes the temporary or permanent placement of painted steel or other painted structures within the waterbody as a result of related demolition work.

ILLINOIS EPA WATER QUALITY CERTIFICATION SPECIAL CONDITIONS FOR NATIONWIDE PERMIT 27
Aquatic Habitat Restoration, Establishment, and Enhancement Activities

1. Pursuant to the Illinois Environmental Protection Act Section 12(a)[415 ILCS 5/12(a)] and 35 Ill. Admin. Code Sections 395.401(a) and 395.401(b)(2), all activities conducted under this nationwide permit shall be in accordance with the provisions of 35 Ill. Adm. Code 405.108. Work in reclaimed surface coal mine areas are required to obtain prior authorization from the Illinois EPA for any activities that result in the use of acid-producing mine refuse.

2. Pursuant to 35 Ill. Admin. Code Sections 302.105(c)(2)(B), 302.208, and 395.401(a), a case-specific (individual) 401 water quality certification from the Illinois EPA will be required for the relocation of waters of the State.

3. Pursuant to 35 Ill. Admin. Code Sections 302.105(c)(2)(B), 302.203, and 395.401(a), any backfilled materials used within artificial channels shall be clean coarse aggregate, gravel or other material which will not cause siltation and placed in a manner to prevent violation of applicable water quality standards.

ILLINOIS EPA WATER QUALITY CERTIFICATION SPECIAL CONDITIONS FOR NATIONWIDE PERMIT 29
Residential Developments

1. Pursuant to 35 Ill. Admin. Code Sections 395.401(a), 302.105(a), and 302.105(c)(2)(B), case-specific (individual) 401 water quality certification from the Illinois EPA will be required for development activities covered by this nationwide permit that cause loss of greater than 300 linear feet of stream channel, as measured along the stream corridor.

2 Pursuant to 35 Ill. Admin. Code Sections 302.203 and 395.401(b), any relocated stream channel authorized under this nationwide permit shall be constructed under dry conditions and allowed to fully stabilize prior to the diversion of flow to prevent erosion and sedimentation.

3. Pursuant to 35 Ill. Admin. Code Section 395.402(b)(2), the applicant is advised that the following permit(s) must be obtained from the Illinois EPA: The applicant must obtain permits to construct sanitary sewers, water mains, and related facilities prior to construction.

ILLINOIS EPA WATER QUALITY CERTIFICATION SPECIAL CONDITIONS FOR NATIONWIDE PERMIT 32
Completed Enforcement Actions

1. Pursuant to 35 Ill. Admin. Code Sections 395.401(a) and 302.105(c)(2)(B), case-specific (individual) 401 water quality certification from the Illinois EPA will be required for activities covered by this nationwide permit that involve carbon recovery (coal mining or coal remining) or materials that may be considered "acid-producing material".

2. Pursuant to 35 Ill. Admin. Code Sections 395.401(a) and 302.105(c)(2)(B), case-specific (individual) 401 water quality certification from the Illinois EPA will be required for activities covered by this nationwide permit that include proposed (yet to be undertaken) loss of aquatic resources which exceed the lessor of ½ acres or 300 linear feet of stream channel as measured along the stream corridor.

ILLINOIS EPA WATER QUALITY CERTIFICATION SPECIAL CONDITIONS FOR NATIONWIDE PERMIT 37
Emergency Watershed Protection and Rehabilitation

1. Pursuant to 35 Ill. Admin. Code Sections 395.401(a), 302.105(a), and 302.105(c)(2)(B), case-specific (individual) 401 water quality certification from the Illinois EPA will be required for activities covered by this nationwide permit that will cause the loss of aquatic resources which exceed the lessor of ½ acres or 300 linear feet of stream channel as measured along the stream corridor.

ILLINOIS EPA WATER QUALITY CERTIFICATION SPECIAL CONDITIONS FOR NATIONWIDE PERMIT 38
Cleanup of Hazardous and Toxic Waste

1. Pursuant to 35 Ill. Admin. Code Section 395.401(b), a case-specific (individual) Section 401 water quality certification will be required for activities covered by this nationwide permit that do not require or will not receive authorization or approval from the Illinois EPA, Bureau of Land (BOL).

2. Pursuant to 35 Ill. Admin. Code Section 395.401(b), the applicant shall notify the Illinois EPA, Bureau of Water, Permit Section, of the specific activity. This notification shall include information concerning the orders and approvals that have been or will be obtained from the BOL, for all cleanup activities under BOL jurisdiction or for which authorization or approval is sought from BOL for no further remedial action.

ILLINOIS EPA WATER QUALITY CERTIFICATION SPECIAL CONDITIONS FOR NATIONWIDE PERMIT 39
Commercial and Institutional Developments

1. Pursuant to 35 Ill. Admin. Code Sections 395.401(a), 302.105(a), and 302.105(c)(2)(B), case-specific (individual) 401 water quality certification from the Illinois EPA will be required for development activities covered by this nationwide permit that cause loss of greater than 300 linear feet of stream channel, as measured along the stream corridor.

2. Pursuant to 35 Ill. Admin. Code Section 395.402(b)(2), the applicant is advised that the following permit(s) must be obtained from the Illinois EPA: The applicant must obtain permits to construct sanitary sewers, water mains, water treatment plants, wastewater treatment plants and related facilities prior to construction.

3. Pursuant to 35 Ill. Admin. Code Sections 302.203 and 395.401(b), any relocated stream channel authorized under this nationwide permit shall be constructed under dry conditions and allowed to fully stabilize prior to the diversion of flow to prevent erosion and sedimentation.

4. Pursuant to 35 Ill. Admin. Code Sections 302.105(c)(2)(B)(ii), 302.203, and 395.401(b), for construction of oil and gas wells, the impacted waters of the State shall be restored to pre-construction conditions within six months after construction is started. For purposes of this condition, restoration includes stabilization and seeding or planting of vegetation on the disturbed areas that were vegetated prior to construction.

ILLINOIS EPA WATER QUALITY CERTIFICATION SPECIAL CONDITIONS FOR NATIONWIDE PERMIT 40
Agricultural Activities

1. Pursuant to 35 Ill. Admin. Code Sections 395.401(a), 302.105(a) and 302.105(c)(2)(B), case-specific (individual) 401 water quality certification from the Illinois EPA will be required for activities covered by this nationwide permit that cause loss of greater than 300 linear feet of stream channel, as measured along the stream corridor.

2. Pursuant to 35 Ill. Admin. Code Sections 302.203 and 395.401(b), any relocated stream channel authorized under this nationwide permit shall be constructed under dry conditions and allowed to fully stabilize prior to the diversion of flow to prevent erosion and sedimentation.

ILLINOIS EPA WATER QUALITY CERTIFICATION SPECIAL CONDITIONS FOR NATIONWIDE PERMIT 42

Recreational Facilities

1. Pursuant to 35 Ill. Admin. Code Sections 395.401(a), 302.105(a) and 302.105(c)(2)(B), case-specific (individual) 401 water quality certification from the Illinois EPA will be required for development activities covered by this nationwide permit that cause loss of greater than 300 linear feet of stream channel, as measured along the stream corridor.

2 Pursuant to 35 Ill. Admin. Code Sections 302.203 and 395.401(b), any relocated stream channel authorized under this nationwide permit shall be constructed under dry conditions and allowed to fully stabilize prior to the diversion of flow to prevent erosion and sedimentation.

3. Pursuant to 35 Ill. Admin. Code Section 395.402(b)(2), the applicant is advised that the following permit(s) must be obtained from the Illinois EPA: The applicant must obtain permits to construct sanitary sewers, water mains, and related facilities prior to construction.

ILLINOIS EPA WATER QUALITY CERTIFICATION SPECIAL CONDITIONS FOR NATIONWIDE PERMIT 43

Stormwater Management Facilities

1. Pursuant to 35 Ill. Admin. Code Sections 302.203 and 395.401(b), the Agency hereby issues Section 401 water quality certification of Nationwide Permit 43 exclusively for the construction and maintenance of pollutant reduction green infrastructure features designed to reduce inputs of sediments, nutrients, and other pollutants into waters to meet reduction targets established under Total Daily Maximum Loads set under the Clean Water Act. All other activities authorized under this Nationwide Permit are denied Section 401 water quality certification. For purposes of this water quality certification green infrastructure means wet weather management approaches and technologies that utilize, enhance or mimic the natural hydrologic cycle processes of infiltration, evapotranspiration and reuse. Green infrastructure approaches currently in use include green roofs, trees and tree boxes, rain gardens, vegetated swales, pocket wetlands, infiltration planters, porous and permeable pavements, porous piping systems, dry wells, vegetated median strips, reforestation/revegetation, rain barrels and cisterns and protection and enhancement of riparian buffers and floodplains. Material excavated, dredged or produced from the maintenance of green infrastructure features shall not be discharged to waters of the State.

2. Pursuant to 35 Ill. Admin. Code Sections 395.401(a), 302.105(a) and 302.105(c)(2)(B), case-specific (individual) 401 water quality certification from the Illinois EPA will be required for development activities covered by this nationwide permit that cause loss of greater than 300 linear feet of stream channel, as measured along the stream corridor.

3 Pursuant to 35 Ill. Admin. Code Sections 302.203 and 395.401(b), any relocated stream channel authorized under this nationwide permit shall be constructed under dry conditions and allowed to fully stabilize prior to the diversion of flow to prevent erosion and sedimentation.

4. Pursuant to 35 Ill. Admin. Code Section 395.402(b)(2), the applicant is advised that the following permit(s) must be obtained from the Illinois EPA: The applicant must obtain permits to construct sanitary sewers, water mains, and related facilities prior to construction.

ILLINOIS EPA WATER QUALITY CERTIFICATION REGIONAL CONDITIONS FOR NATIONWIDE PERMIT 51 Land-Based Renewable Energy Generation Facilities

1. Pursuant to 35 Ill. Admin. Code Sections 395.401(a), 302.105(a) and 302.105(c)(2)(B), case-specific (individual) 401 water quality certification from the Illinois EPA will be required for activities covered by this nationwide permit that cause loss of greater than 300 linear feet of stream channel, as measured along the stream corridor.

2. Pursuant to 35 Ill. Admin. Code Sections 302.203 and 395.401(b), any relocated stream channel authorized under this nationwide permit shall be constructed under dry conditions and allowed to fully stabilize prior to the diversion of flow to prevent erosion and sedimentation.

ILLINOIS EPA WATER QUALITY CERTIFICATION SPECIAL CONDITIONS FOR NATIONWIDE PERMIT 52 Water-Based Renewable Energy Generation Pilot Projects

1. Pursuant to 35 Ill. Admin. Code Sections 395.401(a), 302.105(a) and 302.105(c)(2)(B), case-specific (individual) 401 water quality certification from the Illinois EPA will be required for activities covered by this nationwide permit that cause loss of greater than 300 linear feet of stream channel, as measured along the stream corridor.

2. Pursuant to 35 Ill. Admin. Code Section 395.401(b), an individual Section 401 water quality certification will be required for any hydrokinetic project that is not previously approved by a Section 401 water quality certification issued by the Illinois EPA for a Federal Energy Regulatory Commission license or permit.

ILLINOIS EPA WATER QUALITY CERTIFICATION REGIONAL CONDITIONS FOR NATIONWIDE PERMIT 53 Removal of Low-Head Dams

1. Pursuant to 35 Ill. Admin. Code Sections 302.203, 395.205 and 395.401(b), the applicant shall implement the following Best Management Practices and Material Testing:
    a. Sediments and river bottom material are excavated and removed to upland areas to minimize sediment transport downstream, minimize downcutting and protect water quality; or
    b. measures shall be implemented to minimize sediment transport downstream; or

c. the sediments and river bottom materials that will be transported downstream are determined to have less than 20 percent passing a #230 U.S. Sieve based on representative sampling and analysis of the sediments and river bottom materials; or
d. a combination of the above practices to protect water quality; and
e. sediments and river bottom materials shall not be pollutional if released to downstream waters.

2. Pursuant to 35 Ill. Admin. Code Sections 302.105(c)(2)(B)(ii), 302.203, and 395.401(b), Best Management Practices shall be implemented to minimize sediment transport downstream, minimize downcutting of sediment and river bottom materials and protect water quality.

3. Pursuant to 35 Ill. Admin. Code Section 395.401(a), the applicant shall notify downstream surface water supplies of the proposed dam removal. The applicant shall implement practices to prevent interference with Public and Food Processing Water Supply intakes. The Illinois EPA's Division of Public Water Supply may be contacted at 217/782-1020 for information on the Public and Food Processing Water Supplies.

4. Pursuant to 35 Ill. Admin. Code Sections 302.203, 395.401(b) and 395.402(b)(2), any spoil material excavated, dredged or otherwise produced during dam removal activities must not be returned to the waterway but must be deposited in a self-contained area in compliance with all state statutes, regulations and permit requirements with no discharge to waters of the State unless a permit has been issued by this Agency.

ILLINOIS EPA WATER QUALITY CERTIFICATION SPECIAL CONDITIONS FOR NATIONWIDE PERMIT 54

Living Shorelines

1. Pursuant to 35 Ill. Admin. Code Section 395.401(a), an individual Section 401 water quality certification shall be required for any project that exceeds 1000 feet as measured along the bank or when the District Engineer waives the limitation of 30 feet as measured from the mean high water line.

Intentionally Blank

Road Permit

Intentionally Blank